KC#981

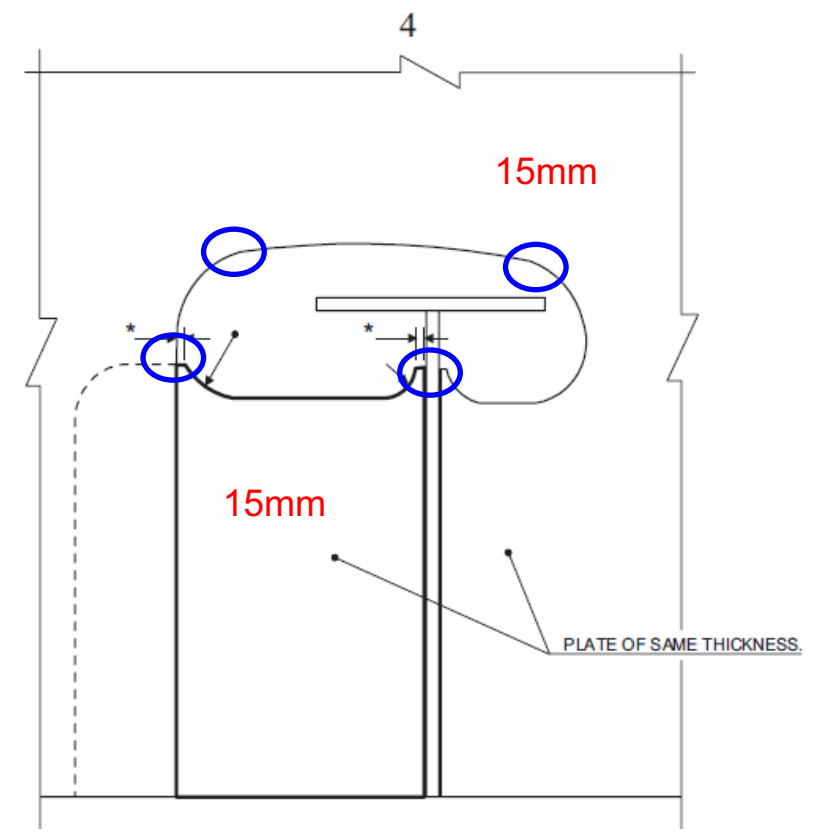

Type A : Fig.C.1.11

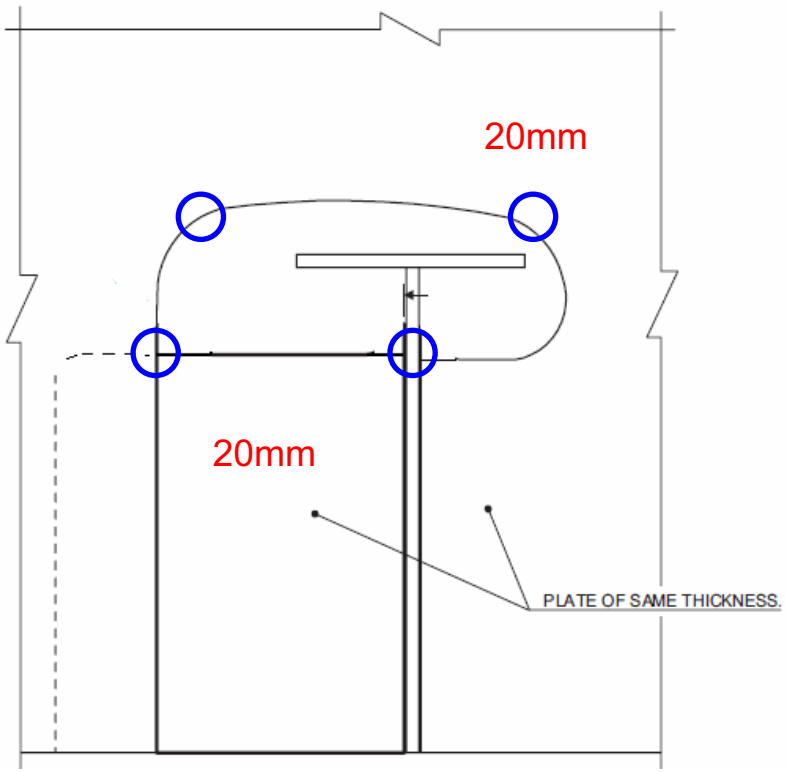

Type B: Alternative

If the hot spot stress is equivalent by the increased web/collar thickness, Type B should be accepted as an alternative design to Type A (Fig.C.1.11).