KC#412

溶接継手の疲労強度に関する板厚効果評価基準の検討

正員 八木順吉* 正員 町田 進**
正員 冨田康光*** 正員 的場正明**
正員 征矢勇夫****

Thickness Effect Criterion for Fatigue Evaluation of Welded Steel Structures

by Junkichi Yagi, *Member* Susumu Machida, *Member*
Yasumitsu Tomita, *Member* Masaaki Matoba, *Member*
Isao Soya, *Member*

Summary

In this study, the thickness effect was investigated by systematic experiments on welded steel joints with thicknesses ranging from 10 to 80mm. Cruciform joints and Tee joints with improved weld by overall profiling or toe-grinding were tested under pulsating tension and under pulsating bending, respectively.

These experimental results were analyzed together with the previous results of as-welded joints. As a result, it was concluded that the thickness effect exponents for various conditions may be classified into three categories according to the combination of joint type and loading mode. As-welded joints under bending stress have the greatest thickness effect exponent of −1/3, while as-welded joints under tension having an exponent of −1/5. If the weld profile is improved by grinding, the thickness effect becomes much milder to an exponent of −1/10. The as-welded joints with constant-sized attachments also have an exponent of −1/10. Furthermore, thickness effect dependency on fatigue life was investigated.

Based on these results, a new evaluation criterion for design purposes has been proposed in this study.

Test Specimen

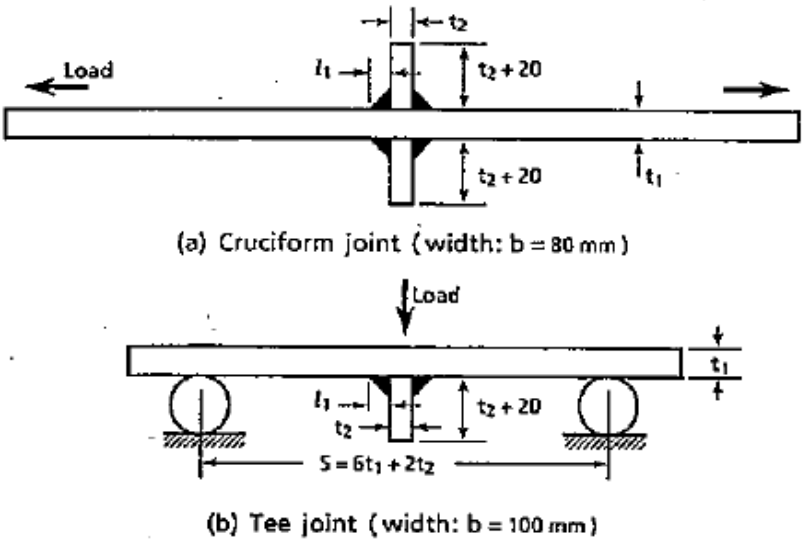

Fig. 1 Tensile and bending fatigue test specimens

Table 1 Fatigue test series of improved joints

Loading	Welded Attachment	Weld Treatment	Code of Series	Main Plate Thickness, t_1 (mm)
Tension	Proportional	Profile	PC1	10, 22, 40, 80
	Constant	Profile	PC2	22, 40, 80
	Proportional	Grinding	GC1	10, 22, 40, 80
Bending	Proportional	Profile	PT1	22, 40, 80
	Constant	Profile	PT2	22, 40, 80
	Proportional	Grinding	GT1	22, 40, 80

Table 2 Dimensions of improved welds

Type of Joint	Main Plate Thickness t_1 (mm)	Rib Plate Thickness t_2 (mm)	Weld Leg Length (mm)		Grinding of Weld Toe	
			l_1	l_2	ρ (mm)	θ (°)
Proportional Joint	10	5	4	4	1.5	40
	22	10	9	9	3	40
	40	22	16	16	6	40
	80	40	32	16	6	25
Constant Joint	22	22	16	16	6	40
	40	22	16	16	6	40
	80	22	16	16	6	40

Summary results of exponents of thickness effect obtained from the experiments

(Dotted line is drawn at -m=0.25 in accordance with UK DEn)

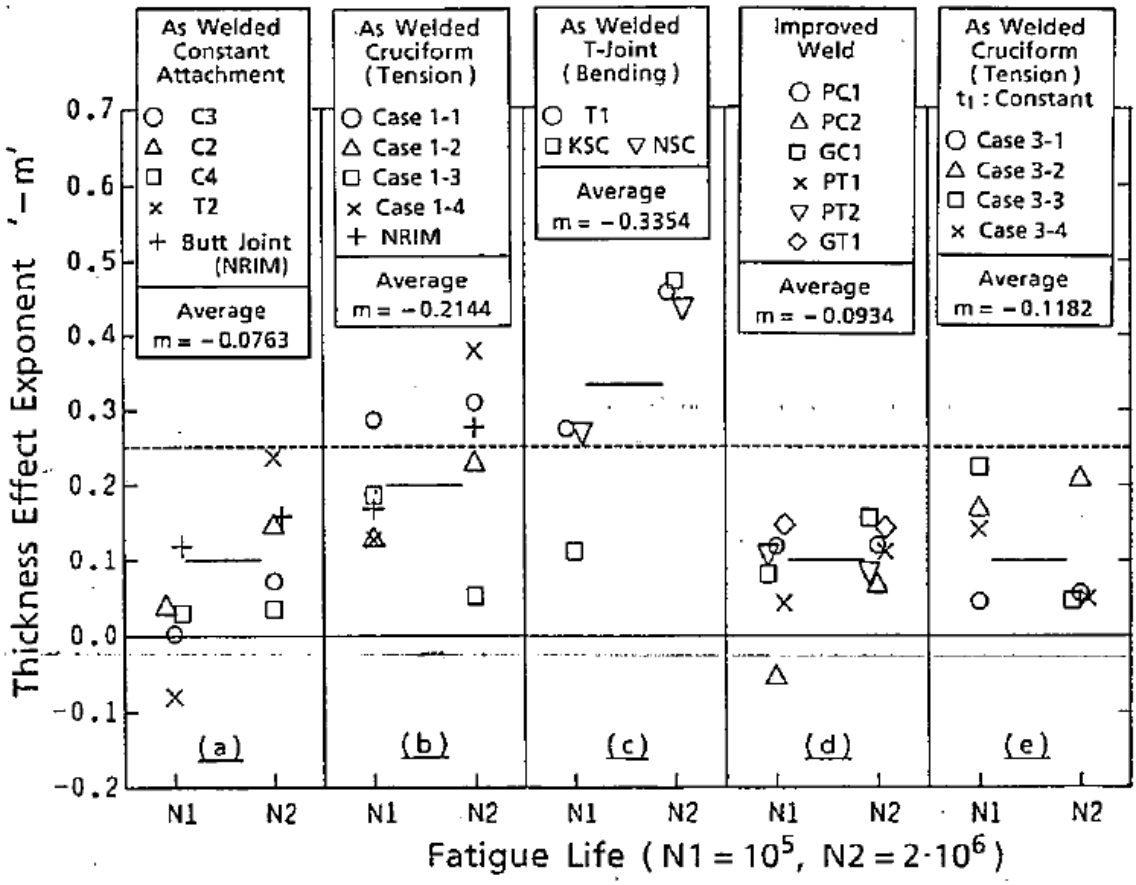

Fig. 13 Thickness effect exponents in various kinds of joints

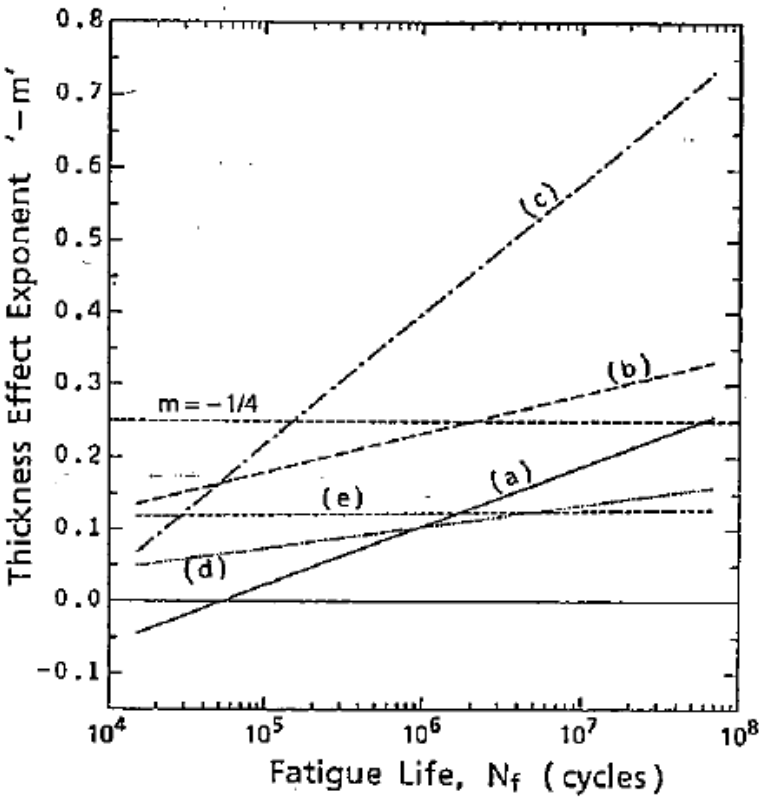

Suggested exponents of thickness effect based on the experiments

Table 3 Joint category associated with thickness effect exponent

Joint Category	Thickness Effect Exponent
(A) As-welded joint in which bending stress is dominant and its basic design S-N curve has been obtained by bending fatigue test.	$m = -1/3$
(B) As-welded joint in which tensile stress is dominant, or as-welded joint for which, even if bending stress is dominant, basic design S-N curve has been obtained by tensile fatigue test.	$m = -1/5$
(C) 1. As-welded butt joint. 2. As-welded joint with welded attachment smaller than a certain size. 3. When joint which is categorized at $m = -1/3$ or $-1/5$ is improved by grinding.	$m = -1/10$