KC#791

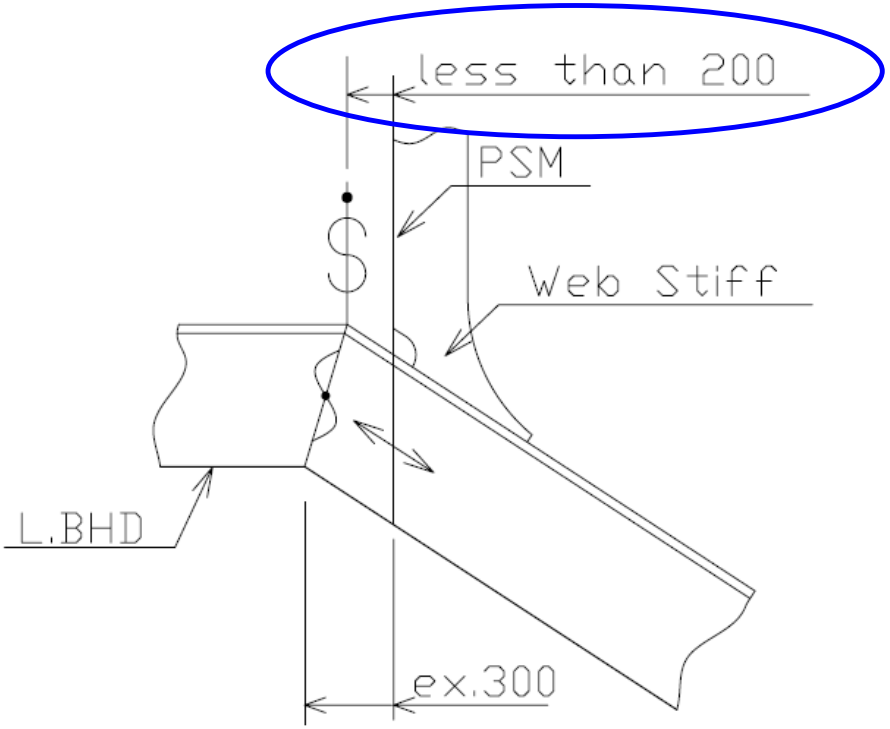

Fig.(a) Knuckled block joint

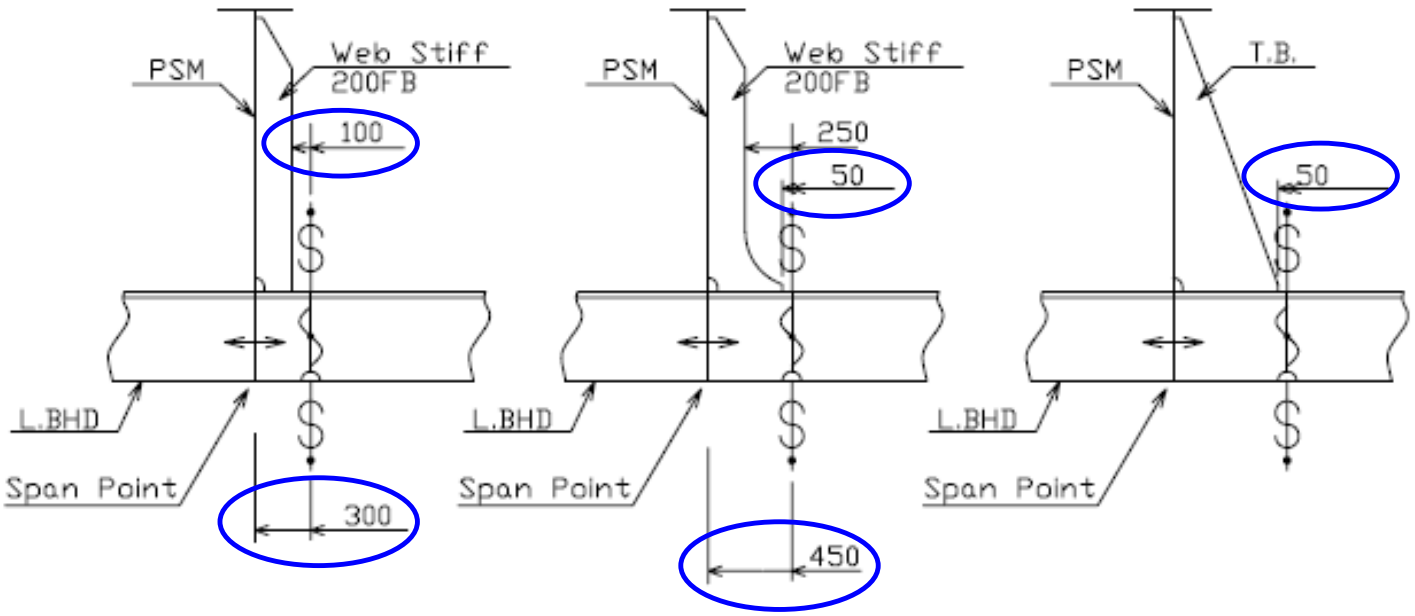

Fig.(b) Block butt arrangements in single skin constructions

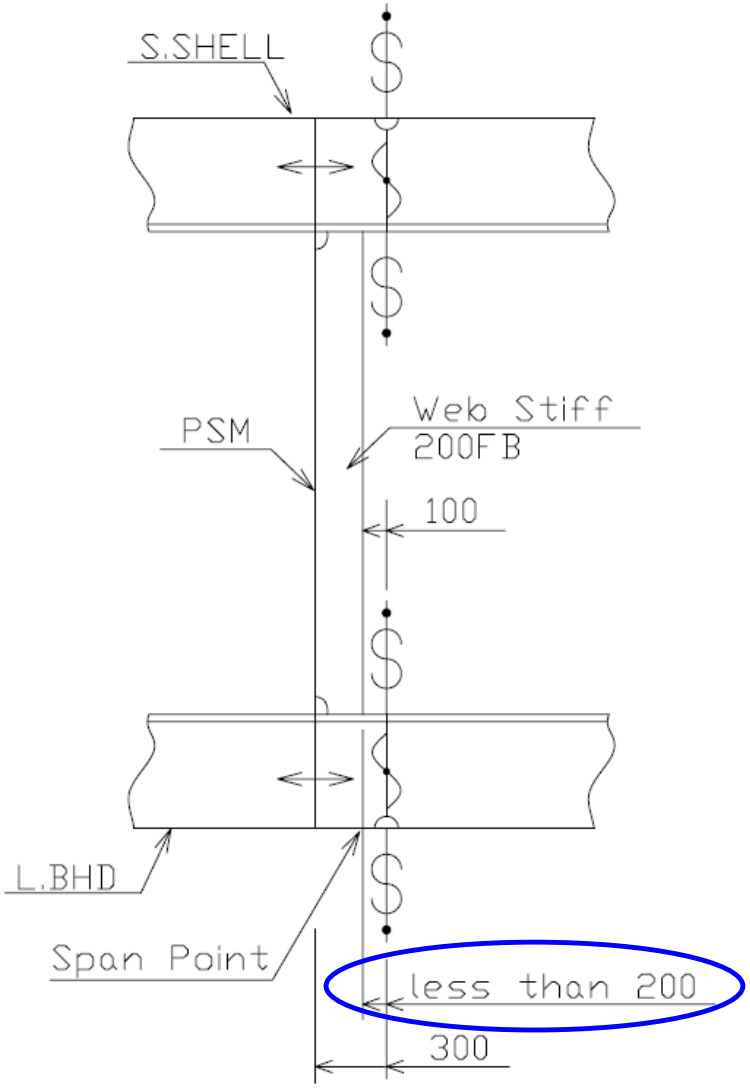

Fig.(c) Block butt arrangement in double skin construction(1)

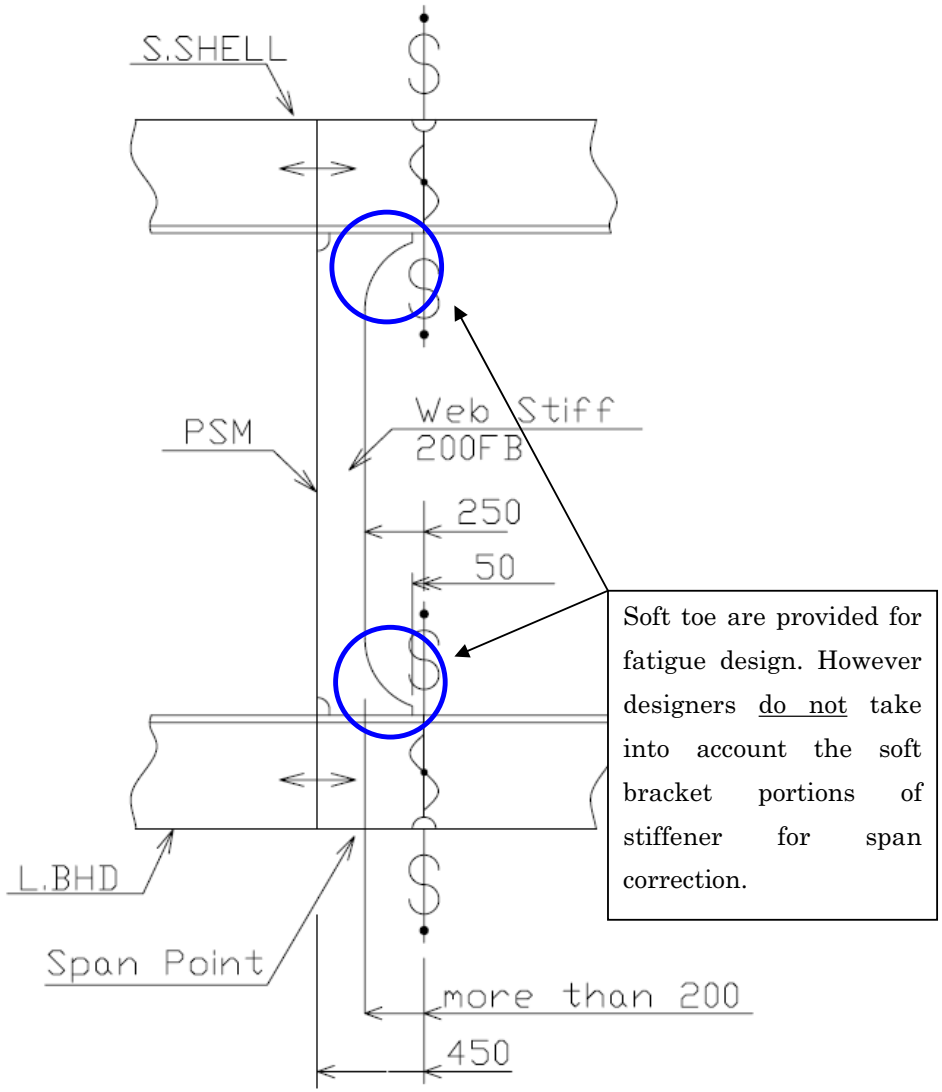

Fig.(d) Block butt arrangement in double skin construction(2)