4 EQUIPMENT

4.1 Equipment Number Calculation

4.1.1 Requirements

4.1.1.1 Anchors and chains are to be in accordance with *Table 11.4.1* and the quantity, mass and sizes of these are to be determined by the equipment number (*EN*), given by:

$$EN = \Delta^{2/3} + 2Bh_{dk} + 0.1A$$

Where:

Δ	moulded displacement, in tonnes, as defined in *Section 4/1.1.7.1*
B	moulded breadth, in m, as defined in *Section 4/1.1.3.1*
h_{dk}	$h_{FB} + h_1 + h_2 + h_3 + \ldots$, as shown in *Figure 11.4.1*. In the calculation of h, sheer, camber and trim may be neglected
h_{FB}	freeboard from the summer load waterline amidships, in m
$h_1, h_2, h_3 \ldots h_n$	height on the centreline of each tier of houses having a breadth greater than $B/4$, in m
A	profile area of the hull, superstructure and houses above the summer load waterline which are within the length L, in m². Superstructures or deck houses having a breadth equal to or less than $B/4$ at any point may be excluded. With regard to determining A, when a screen or bulwark is more than 1.5m high, the area shown in *Figure 11.4.2* as A_2 is to be included in A
L	rule length, as defined in *Section 4/1.1.1.1*

Figure 11.4.1
Effective Heights of Deck Houses

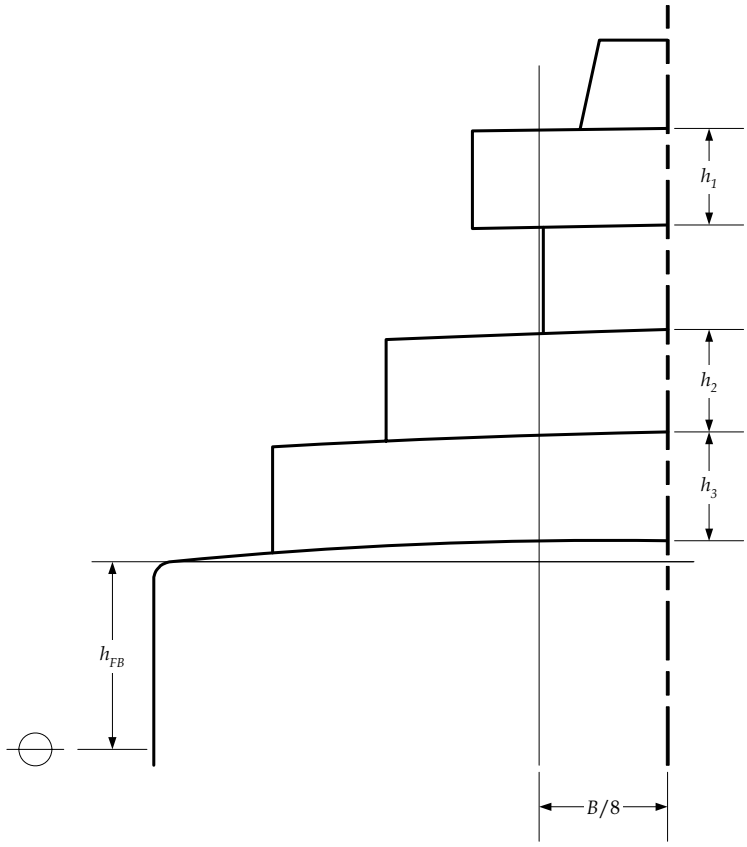

Figure 11.4.2
Profile Areas of Screens and Bulwarks

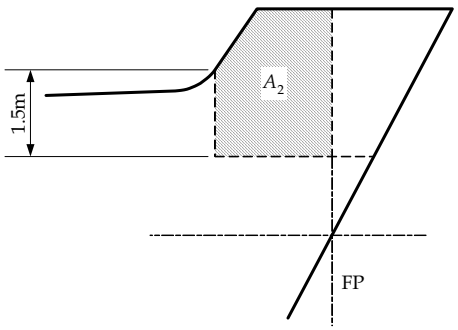

Requirements concerning MOORING, ANCHORING AND TOWING

CONTENTS

A1	Equipment	Rev. 5 June 2005
A1.1	Design of the anchoring equipment	1981
A1.2	Equipment number and anchoring equipment Table (for vessels of unrestricted service)	1999
A1.3	Anchoring equipment for special purpose ships (tugs and dredgers)	Rev. 1994/Corr. 95
A1.4	Anchors	Rev. 4 1999
A1.5	Chain cables for bower anchors	Rev. 4 1999
A1.6	Permissible weardown of stud link chain cable for bower anchors	1992
A2	Shipboard fittings and supporting hull structures associated with towing and mooring on conventional vessels	Rev.1 July 2004

A1 Equipment

(1981) (Rev. 1 1987) (Rev. 2 1992) (Rev. 3 1994) (Rev. 4 Aug. 1999) (Rev.5 June 2005)

A1.1 Design of the anchoring equipment
(1981)

A1.1.1 The anchoring equipment required herewith is intended for temporary mooring of a vessel within a harbour or sheltered area when the vessel is awaiting berth, tide, etc.

A1.1.2 The equipment is therefore not designed to hold a ship off fully exposed coasts in rough weather or to stop a ship which is moving or drifting. In this condition the loads on the anchoring equipment increase to such a degree that its components may be damaged or lost owing to the high energy forces generated, particularly in large ships.

A1.1.3 The anchoring equipment presently required herewith is designed to hold a ship in good holding ground in conditions such as to avoid dragging of the anchor. In poor holding ground the holding power of the anchors will be significantly reduced.

A1.1.4 The Equipment Numeral (EN) formula for anchoring equipment required here under is based on an assumed current speed of 2.5 m/sec, wind speed of 25 m/sec and a scope of chain cable between 6 and 10, the scope being the ratio between length of chain paid out and water depth.

A1.1.5 It is assumed that under normal circumstances a ship will use only one bow anchor and chain cable at a time.

A1.1.6 Manufacture of anchors and anchor chain cables is to be in accordance with UR W29 and UR W18.

A1.2 Equipment number and anchoring equipment table (for vessels of unrestricted service)
(1981) (1999)

The equipment of anchors and chain cables is to be as given in Table 1 and is to be based on an "Equipment Number" calculated as follows:

$$EN = \Delta^{2/3} + 2{,}0\ hB + \frac{A}{10}$$

Where:

Δ = moulded displacements, in tonnes, to the Summer Load Waterline

B = moulded breadth, in metres

h = effective height, in metres, from the Summer Load Waterline to the top of the uppermost house; for the lowest tier "h" is to be measured at centerline from the upper deck or from a notional deck line where there is local discontinuity in the upper deck.

$$h = a + \Sigma h_i$$

Where:

a = distance, in metres, from the Summer Load Waterline amidships to the upper deck
h_i = height, in metres, on the centerline of each tier of houses having a breadth greater than B/4

Note:
Rev.5 of this UR is to be uniformly implemented by IACS Societies on anchors and anchor chain cables the manufacturing of which is commenced on or after 1 January 2007.

A1
cont'd

A = area, in square metres, in profile view, of the hull, superstructures and houses above the Summer Load Waterline which are within the Equipment length of the vessel and also have a breadth greater than B/4.

NOTES

1. When calculating h, sheer and trim are to be ignored, i.e. h is the sum of freeboard amidships plus the height (at centerline) of each tier of houses having a breadth greater than B/4.

2. If a house having a breadth greater than B/4 is above a house with a breadth of B/4 or less then the wide house is to be included but the narrow house ignored.

3. Screens or bulwarks 1,5 m or more in height are to be regarded as parts of houses when determining h and A.The height of the hatch coamings and that of any deck cargo, such as containers, may be disregarded when determining h and A.
With regard to determining A, when a bulwark is more than 1,5 m high, the area shown below as A_2 should be included in A.

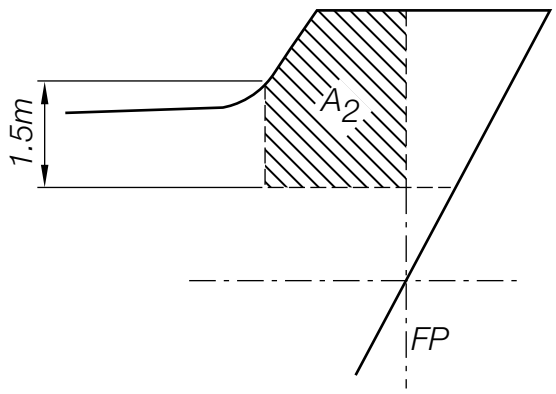

4. The equipment length of the vessels is the length between perpendiculars but is not to be less than 96% nor greater than 97% of the extreme length on the Summer Waterline (measured from the forward end of the Waterline).

5. The total length of chain given in Table 1 - col. 4- is to be divided in approximately equal parts between the two bower anchors

A1
cont'd

Table 1 Anchoring equipment

E.N.	Stockless bower anchors		Stud link chain cable for bower anchors			
				Min. dia.		
	No. *	Mass per anchor (kg)	Total length (m)	Mild steel Gr. 1 (mm)	Special quality Gr. 2 (mm)	Extra special quality Gr. 3 (mm)
1	2	3	4	5	6	7
205-240	3	660	302.5	26	22	20.5
240-280	3	780	330	28	24	22
280-320	3	900	357.5	30	26	24
320-360	3	1020	357.5	32	28	24
360-400	3	1140	385	34	30	26
400-450	3	1290	385	36	32	28
450-500	3	1440	412.5	38	34	30
500-550	3	1590	412.5	40	34	30
550-600	3	1740	440	42	36	32
600-660	3	1920	440	44	38	34
660-720	3	2100	440	46	40	36
720-780	3	2280	467.5	48	42	36
780-840	3	2460	467.5	50	44	38
840-910	3	2640	467.5	52	46	40
910-980	3	2850	495	54	48	42
980-1060	3	3060	495	56	50	44
1060-1140	3	3300	495	58	50	46
1140-1220	3	3540	522.5	60	52	46
1220-1300	3	3780	522.5	62	54	48
1300-1390	3	4050	522.5	64	56	50
1390-1480	3	4320	550	66	58	50
1480-1570	3	4590	550	68	60	52
1570-1670	3	4890	550	70	62	54
1670-1790	3	5250	577.5	73	64	56
1790-1930	3	5610	577.5	76	66	58
1930-2080	3	6000	577.5	78	68	60
2080-2230	3	6450	605	81	70	62
2230-2380	3	6900	605	84	73	64
2380-2530	3	7350	605	87	76	66
2530-2700	3	7800	632.5	90	78	68
2700-2870	3	8300	632.5	92	81	70
2870-3040	3	8700	632.5	95	84	73
3040-3210	3	9300	660	97	84	76
3210-3400	3	9900	660	100	87	78
3400-3600	3	10500	660	102	90	78
3600-3800	3	11100	687.5	105	92	81
3800-4000	3	11700	687.5	107	95	84
4000-4200	3	12300	687.5	111	97	87

A1
cont'd

Table 1 – *continued*

1	2	3	4	5	6	7
4200-4400	3	12900	715	114	100	87
4400-4600	3	13500	715	117	102	90
4600-4800	3	14100	715	120	105	92
4800-5000	3	14700	742.5	122	107	95
5000-5200	3	15400	742.5	124	111	97
5200-5500	3	16100	742.5	127	111	97
5500-5800	3	16900	742.5	130	114	100
5800-6100	3	17800	742.5	132	117	102
6100-6500	3	18800	742.5		120	107
6500-6900	3	20000	770		124	111
6900-7400	3	21500	770		127	114
7400-7900	3	23000	770		132	117
7900-8400	3	24500	770		137	122
8400-8900	3	26000	770		142	127
8900-9400	3	27500	770		147	132
9400-10000	3	29000	770		152	132
10000-10700	3	31000	770			137
10700-11500	3	33000	770			142
11500-12400	3	35500	770			147
12400-13400	3	38500	770			152
13400-14600	3	42000	770			157
14600-16000	3	46000	770			162

* See A1.4.2

A1.3 Anchoring equipment for special purpose ships (tugs and dredgers)
(1981)

A1.3.1 Equipment for tugs
(1994/Corr. 95)

For tugs of unrestricted service the equipment shall be provided in compliance with the present requirement.

However, for the determination of the "Equipment Number", in the formula given in A1.2, the following may be substituted for the term 2.0 hB

$$2.0\ (aB + \Sigma\ hibi)$$

where

a, B and hi are defined in A1.2,

bi is the breadth, in metres, of the widest superstructure or deckhouse of each tier having a breadth greater than B/4.

For tugs of restricted service the equipment shall be provided at the discretion of each individual Classification Society.

A1.3.2 Equipment for dredgers
For dredgers of unrestricted service having normal ship shape of underwater part of the hull the anchoring equipment shall be provided in accordance with the present Requirement.

When calculating the Equipment Number bucket ladders and gallows are not to be included. If however a dredger has unusual design of the underwater part of the hull, each Classification Society is free to modify the requirements to anchoring equipment.

As far as dredgers of limited service are concerned, the equipment is to be provided at the discretion of each individual Classification Society.

A1
cont'd

A1.4 Anchors
(Rev. 1 1987) (Rev. 4 1999)

A1.4.1 Types of Anchors

A1.4.1.1 Ordinary anchors

(a) Ordinary anchors of "stockless" type are to be generally adopted and they are to be of appropriate design in compliance with the rules or practice of each individual Society.

(b) The mass of the heads of stockless anchors including pins and fittings are not to be less than 60% of the total mass of the anchor.

(c) The mass, per anchor, of bower anchor given in Table 1 is required for anchors of equal mass. The mass of individual anchor may vary to 7% of the Table mass provided that the total mass of anchors is not less than that required for anchors of equal mass.

A1.4.1.2 High holding power (HHP) anchors

(a) A "high holding power" anchor is to be suitable for ship's use and is not to require prior adjustment or special placement on the sea bottom.

(b) When special type of anchors designated "high holding power anchor" of proven superior holding ability are used as bower anchors, the mass of each anchor may be 75% of the mass required for ordinary stockless bower anchors in the Table 1.

(c) For approval and/or acceptance as a HHP anchor satisfactory tests are to be made on various types of bottom, and the anchor is to have a holding power at least twice than of an ordinary stockless anchor of the same weight. Full scale tests are to be carried out at sea on various types of bottom and to be applied to anchors the weights of which are, as far as possible, representative of the full range of sizes proposed; for a definite group of the range the two anchors selected for testing (ordinary stockless anchors and HHP anchors) should be of approximately the same weight, and should be tested in association with the size of chain cable appropriate to this weight.
The length of cable with each anchor should be such that the pull on the shank remains practically horizontal, for this purpose a scope of 10 is considered normal but a scope of not less than 6 may be accepted. Scope is defined as the ratio of length of cable to depth of water.
Three tests shall be taken for each anchor and nature of bed. The pull shall be measured by dynamometer. The stability of the anchor and ease of breaking out should be noted where possible. Tests are normally to be carried out from a tug but alternatively shore based tests may be accepted.
Measurements of pull based on RPM/bollard pull curve of tug may be accepted instead of dynamometer readings.
Tests in comparison with a previously approved HHP anchor may be accepted as a basis for approval.
For approval and/or acceptance of high holding power anchors of the whole range of weight, tests should be carried out on at least two - sizes of anchors and the weight of the maximum size to be approved could be accepted up to 10 times the weight of large size tested.

A1.4.1.3 Super high holding power (SHHP) anchors

(a) Definition

A super high holding power anchor is an anchor with a holding power of at least four times that of an ordinary stockless anchor of the same mass. A super high holding power anchor is suitable for restricted service vessels' use and does not require prior adjustment or special placement on the sea bed.

A1
cont'd

(b) Limitations to Usage

The use of SHHP anchors is limited to restricted service vessels as defined by the individual classification society.

The SHHP anchor mass should generally not exceed 1500kg.

(c) Application

The unified requirement for the design of SHHP anchors applies down to EN ≥ 205. For EN < 205 the design criteria for SHHP anchors apply to the anchor mass given in Recommendation 10 for ordinary stockless anchors, reduced as permitted in accordance with 1.1 (b) of Recommendation 10.

(d) Anchor Design

i) Anchor Use

A super high holding power anchor is to be suitable for vessels in restricted service and is not to require prior adjustment or special placement on the sea bed.

ii) Anchor Mass

When super high holding power anchors of the proven holding power given in e) below are used as bower anchors, the mass of each such anchor may be reduced to not less than 50% of the mass required for ordinary stockless anchors in Table 1.

(e) Anchor Holding Power

For approval and/or acceptance as a SHHP anchor satisfactory full scale tests are to be made confirming that the anchor has a holding power of at least four times that of an ordinary stockless anchor or at least two times that of a previously approved HHP anchor, of the same mass.
The tests are also to verify that the anchor withstands the test without permanent deformation.

(f) Anchor Holding Power Tests

i) The full scale tests required by e) are to be carried out at sea on three types of bottom; normally, soft mud or silt, sand or gravel and hard clay or similar compounded material. The tests are to be applied to anchors of mass which are as far as possible representative of the full range of sizes proposed.

For a definite group within the range, the two anchors selected for testing (ordinary stockless and SHHP anchors) should be approximately the same mass and should be tested in association with the size of chain required for the anchor mass and anchor type. Where an ordinary stockless anchor is not available, a previously approved HHP anchor may be used in its place. The length of the cable with each anchor should be such that the pull on the shank remains practically horizontal. For this purpose a scope of 10 is considered normal.

Three tests shall be taken for each anchor and each type of bottom. The pull shall be measured by dynamometer. The stability of the anchor and ease of breaking out should be noted where possible. Tests are to be carried out from a tug but alternativaly shore based tests may be accepted. Measurements of pull, based on the RPM/bollard pull curve of the tug may be accepted as an alternative to dynanometer.

Tests in comparison with a previously approved SHHP anchor may be also accepted as a basis for approval.

If approval is sought for a range of anchor sizes, then at least three anchor sizes are to be tested, indicative of the bottom, middle and top of the mass range.

ii) The holding power test load is not to exceed the proof load of the anchor.

A1
cont'd

A1.4.2 Installation of the anchors on board

Two bower anchors of the three bower anchors under col. 2 of Table 1 are to be connected to their cables and positioned on board ready for use while the third anchor is intended as a spare bower anchor. Installation of the spare bower anchor on board is not compulsorily required. Each Classification Society is free to permit other arrangements at its discretion or not to require the spare anchor as a condition of classification.

A1.4.3 Proof testing of anchors

A1.4.3.1 Testing of ordinary anchors

(i) The proof load as per Table 2 is to be applied on the arm or on the palm at a spot which, measured from the extremity of the bill, is one-third of the distance between it and the centre of the crown.
In the case of stockless anchors, both arms are to be tested at the same time, first on one side of the shank, then reversed and tested on the other.

(ii) Anchors of all sizes should be proof tested with the test loads stipulated in the Table 2.

(iii) Before application of proof test load the anchors are to be examined to be sure that castings are reasonably free of surface imperfections of harmful nature.
After proof load testing the anchors are to be examined for cracks and other defects.
On completion of the proof load tests the anchors made in more than one piece are to be examined for free rotation of their heads over the complete angle.
In every test the difference between the gauge lengths (as shown in figures) where one-tenth of the required load was applied first and where the load has been reduced to one-tenth of the required load from the full load may be permitted not to exceed one percent (1%).

A1.4.3.2 Testing of HHP anchors

The HHP anchor is to be proof tested with load required by Table 2 for an anchor mass equal to 1.33 times the actual mass of the HHP anchor. The proof loading procedure and examination procedure for HHP anchors are to comply with those for ordinary anchors, A1.4.3.1(iii).

A1 cont'd

Table 2 Proof Load Tests for Anchors

Mass of anchor kg	Proof test load kN	Mass of anchor kg	Proof test load kN	Mass of anchor kg	Proof test load kN	Mass of anchor kg	Proof test load kN
50	23.2	1250	239	5000	661	12500	1130
55	25.2	1300	247	5100	669	13000	1160
60	27.1	1350	255	5200	677	13500	1180
65	28.9	1400	262	5300	685	14000	1210
70	30.7	1450	270	5400	691	14500	1230
75	32.4	1500	278	5500	699	15000	1260
80	33.9	1600	292	5600	706	15500	1270
90	36.3	1700	307	5700	713	16000	1300
100	39.1	1800	321	5800	721	16500	1330
120	44.3	1900	335	5900	728	17000	1360
140	49.0	2000	349	6000	735	17500	1390
160	53.3	2100	362	6100	740	18000	1410
180	57.4	2200	376	6200	747	18500	1440
200	61.3	2300	388	6300	754	19000	1470
225	65.8	2400	401	6400	760	19500	1490
250	70.4	2500	414	6500	767	20000	1520
275	74.9	2600	427	6600	773	21000	1570
300	79.5	2700	438	6700	779	22000	1620
325	84.1	2800	450	6800	786	23000	1670
350	88.8	2900	462	6900	794	24000	1720
375	93.4	3000	474	7000	804	25000	1770
400	97.9	3100	484	7200	818	26000	1800
425	103	3200	495	7400	832	27000	1850
450	107	3300	506	7600	845	28000	1900
475	112	3400	517	7800	861	29000	1940
500	116	3500	528	8000	877	30000	1990
550	124	3600	537	8200	892	31000	2030
600	132	3700	547	8400	908	32000	2070
650	140	3800	557	8600	922	34000	2160
700	149	3900	567	8800	936	36000	2250
750	158	4000	577	9000	949	38000	2330
800	166	4100	586	9200	961	40000	2410
850	175	4200	595	9400	975	42000	2490
900	182	4300	604	9600	987	44000	2570
950	191	4400	613	9800	998	46000	2650
1000	199	4500	622	10000	1010	48000	2730
1050	208	4600	631	10500	1040		
1100	216	4700	638	11000	1070		
1150	224	4800	645	11500	1090		
1200	231	4900	653	12000	1110		

— Proof loads for intermediate mass are to be determined by linear interpolation.

A1
cont'd

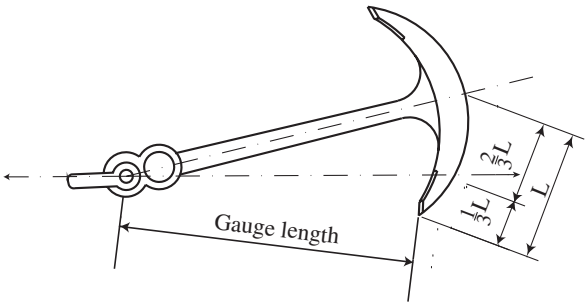

Stocked Anchor

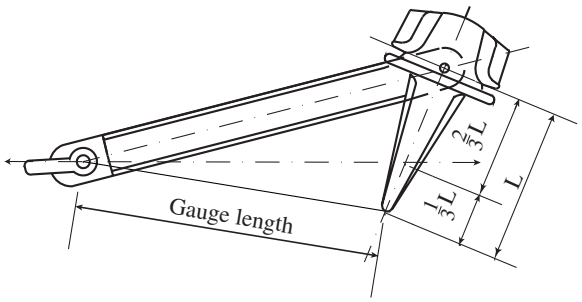

Stockless Anchor

A1.4.3.3 Testing of SHHP Anchors

A1.4.3.3.1 Anchor Proof Test

The SHHP anchor is to be proof tested with the load required by Table 2 for an anchor mass equal to 2 times the actual mass of the SHHP anchor. The proof loading procedure and examination procedure for SHHP anchors are to comply with those for ordinary anchors, A1.4.3.1 (iii).

A1.4.3.3.2 Anchor inspections and Additional Tests

After the proof load test, all SHHP anchors are to be surface inspected by the dye penetrant method or by the magnetic particle method. All surfaces of cast steel anchors are to be surface inspected. The surface inspections are to follow Guidelines for NDE of Hull and Machinery Steel Castings. All cast steel anchors are to be examined by UT in way of areas where feeder heads and risers have been removed and where weld repairs have been carried out. The UT inspections are to follow Guidelines for NDE of Hull and Machinery Steel Castings. Welded steel anchors are to be inspected at the welds. At sections of high load or at suspect areas, the Society may impose volumetric nondestructive examination; e.g ultrasonic inspection, or radiographic inspection.

At the discretion of the Society, additional tests of the anchor may be required. These tests include the hammering test and the drop test, and are usually applied to cast steel anchors.

A1
cont'd

A1.4.4 Anchor Material Selection and Toughness

All SHHP anchors are to be manufactured from materials meeting the requirements of the IACS URs as follows:

Welded Steel Anchors:	UR W11	Normal and Higher Strength Hull Structural Steel
	UR W17	Approval of consumables for welding normal and higher strength hull structural steel
Cast Steel Anchors:	UR W8	Hull and machinery steel castings
Anchor Shackles:	UR W7 UR W8	Hull and machinery steel forgings Hull and machinery steel castings

The base steel grades in welded SHHP anchors are to be selected with respect to the Material Grade Requirements for Class II of S6.1 in UR S-6 "Use of steel grades for various hull members". The welding consumables are to meet the toughness for the base steel grades in accordance with UR W17 "Approval of consumables for welding normal and higher strength hull structural steel". The toughness of the anchor shackles for SHHP anchors is to meet that for Grade 3 anchor chain in accordance with UR W18 "Anchor chain cables and accessories". The toughness of steel castings for SHHP anchors is to be not less than a Charpy V-notch energy average of 27 J at 0 degree C.

A1.4.5 Fabricated Anchors

Fabricated anchors are to be manufactured in accordance with approved welding procedures using approved welding consumables and carried out by qualified welders.

A1 cont'd

A1.5 Chain cables for bower anchors
(1981) (1999)

A1.5.1 Anchor Cable Design

A1.5.1.1 The chain cable is to be as required by Table 1 for the calculated equipment number for the vessel. The anchor cable is to be tested in accordance with Table 5 to the test loads corresponding to those for the required chain cable.

A1.5.1.2 Where the vessel may anchor in areas where the current exceeds 2.5 m/s, the need to provide a length of heavier chain cable locally between the anchor and the rest of the chain to enhance anchor bedding may be required at the discretion of the Classification Society.

A1.5.1.3 For certain restricted services the use of steel wire rope may be accepted in place of chain cable at the discretion of the classification society.

A1.5.2 Grades of chain cables
Bower anchors are to be associated with stud link chain cables for one of the grades listed in Table 3.

Table 3 Grades of chain cables

Material	Grade	Range of UTS (N/mm^2)
Mild steel	1	300 to 490 ($31 \div 50$ kg/mm^2)
Special quality steel	2	490 to 690 ($50 \div 70$ kg/mm^2)
Extra special quality steel	3	> 690 (>70 kg/mm^2)

NOTE

The designation "Grade 1" may be replaced, at discretion of each Classification Society, by "Grade 1a" where UTS is greater than 300 but not exceeding 400 N/mm^2 or by "Grade 1b" where UTS is greater than 400 but not exceeding 490 N/mm^2.

A1.5.3 Proof and breaking loads of stud link chain cables

(a) The design and/or standard breaking loads BL and proof load PL (expressed in kN) of stud link chain cables are given in Table 4 being d the chain diameter (mm).

Table 4

Grade	BL	PL
1	$BL_1 = 9{,}80665 \times 10^{-3}\ [d^2\ (44 - 0{,}08\ d)]$	$PL_1 = 0{,}7\ BL_1$
2	$BL_2 = 1{,}4\ BL_1$	$PL_2 = BL_1$
3	$BL_3 = 2\ BL_1$	$PL_3 = 1{,}4\ BL_1$

A1
cont'd

(b) The test load values, rounded off from the loads in (a) above to be used for testing abd acceptance of chain cables, are given in Table 5.

Table 5 Test Load Values for Stud Link Chains

Chain diameter mm	Grade 1		Grade 2		Grade 3	
	Proof load kN	Breaking load kN	Proof load kN	Breaking load kN	Proof load kN	Breaking load kN
1	2	3	4	5	6	7
20,5	123	175	175	244	244	349
22	140	200	200	280	280	401
24	167	237	237	332	332	476
26	194	278	278	389	389	556
28	225	321	321	449	449	642
30	257	368	368	514	514	735
32	291	417	417	583	583	833
34	328	468	468	655	655	937
36	366	523	523	732	732	1050
38	406	581	581	812	812	1160
40	448	640	640	896	896	1280
42	492	703	703	981	981	1400
44	583	769	769	1080	1080	1540
46	585	837	837	1170	1170	1680
48	635	908	908	1270	1270	1810
50	686	981	981	1370	1370	1960
52	739	1060	1060	1480	1480	2110
54	794	1140	1140	1590	1590	2270
56	851	1220	1220	1710	1710	2430
58	909	1290	1290	1810	1810	2600
60	969	1380	1380	1940	1940	2770
62	1030	1470	1470	2060	2060	2940
64	1100	1560	1560	2190	2190	3130
66	1160	1660	1660	2310	2310	3300
68	1230	1750	1750	2450	2450	3500
70	1290	1840	1840	2580	2580	3690
73	1390	1990	1990	2790	2790	3990
76	1500	2150	2150	3010	3010	4300
78	1580	2260	2260	3160	3160	4500
81	1690	2410	2410	3380	3380	4820
84	1800	2580	2580	3610	3610	5160
87	1920	2750	2750	3850	3850	5500
90	2050	2920	2920	4090	4090	5840
92	2130	3040	3040	4260	4260	6080
95	2260	3230	3230	4510	4510	6440
97	2340	3340	3340	4680	4680	6690
100	2470	3530	3530	4940	4940	7060
102	2560	3660	3660	5120	5120	7320
105	2700	3850	3850	5390	5390	7700
107	2790	3980	3980	5570	5570	7960

A1
cont'd

Table 5 *continued*

1	2	3	4	5	6	7
111	2970	4250	4250	5940	5940	8480
114	3110	4440	4440	6230	6230	8890
117	3260	4650	4650	6510	6510	9300
120	3400	4850	4850	6810	6810	9720
122	3500	5000	5000	7000	7000	9990
124	3600	5140	5140	7200	7200	10280
127	3750	5350	5350	7490	7490	10710
130	3900	5570	5570	7800	7800	11140
132	4000	5720	5720	8000	8000	11420
137	4260	6080	6080	8510	8510	12160
142	4520	6450	6450	9030	9030	12910
147	4790	6840	6840	9560	9560	13660
152	5050	7220	7220	10100	10100	14430
157	5320	7600	7600	10640	10640	15200
162	5590	7990	7990	11170	11170	15970

A1.6 Permissible Weardown of Stud Link Chain Cable for Bower Anchors
(1992)

When a length of chain cable is so worn that the mean diameter of a link, at its most worn part, is reduced by 12% or more from its required nominal diameter it should be renewed.

The mean diameter is half the value of the sum of the minimum diameter found in one cross-section of the link and of the diameter measured in a perpendicular direction in the same cross-section.

END

A1 Equipment

(1981) (Rev. 1 1987) (Rev. 2 1992) (Rev. 3 1994) (Rev. 4 Aug. 1999) (Rev.5 June 2005)

A1.1 Design of the anchoring equipment
(1981)

A1.1.1 The anchoring equipment required herewith is intended for temporary mooring of a vessel within a harbour or sheltered area when the vessel is awaiting berth, tide, etc.

A1.1.2 The equipment is therefore not designed to hold a ship off fully exposed coasts in rough weather or to stop a ship which is moving or drifting. In this condition the loads on the anchoring equipment increase to such a degree that its components may be damaged or lost owing to the high energy forces generated, particularly in large ships.

A1.1.3 The anchoring equipment presently required herewith is designed to hold a ship in good holding ground in conditions such as to avoid dragging of the anchor. In poor holding ground the holding power of the anchors will be significantly reduced.

A1.1.4 The Equipment Numeral (EN) formula for anchoring equipment required here under is based on an assumed current speed of 2.5 m/sec, wind speed of 25 m/sec and a scope of chain cable between 6 and 10, the scope being the ratio between length of chain paid out and water depth.

A1.1.5 It is assumed that under normal circumstances a ship will use only one bow anchor and chain cable at a time.

A1.1.6 Manufacture of anchors and anchor chain cables is to be in accordance with UR W29 and UR W18.

A1.2 Equipment number and anchoring equipment table (for vessels of unrestricted service)
(1981) (1999)

The equipment of anchors and chain cables is to be as given in Table 1 and is to be based on an "Equipment Number" calculated as follows:

$$EN = \Delta^{2/3} + 2{,}0\ hB + \frac{A}{10}$$

Where:

Δ = moulded displacements, in tonnes, to the Summer Load Waterline

B = moulded breadth, in metres

h = effective height, in metres, from the Summer Load Waterline to the top of the uppermost house; for the lowest tier "h" is to be measured at centerline from the upper deck or from a notional deck line where there is local discontinuity in the upper deck.

$$h = a + \Sigma h_i$$

Where:

a = distance, in metres, from the Summer Load Waterline amidships to the upper deck
h_i = height, in metres, on the centerline of each tier of houses having a breadth greater than B/4

Table 1 – *continued*

Note:
Rev.5 of this UR is to be uniformly implemented by IACS Societies on anchors and anchor chain cables the manufacturing of which is commenced on or after 1 January 2007.