KC#1023

One:

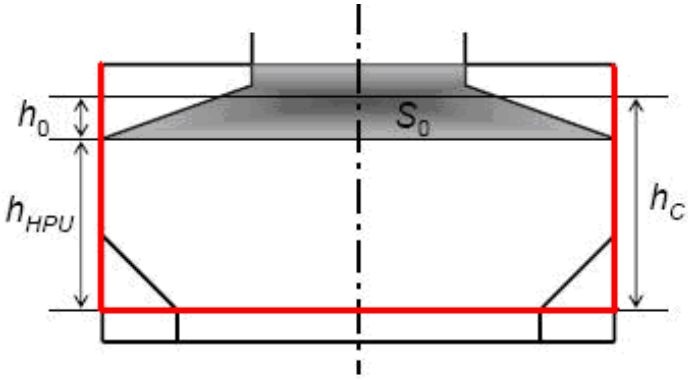

Single side bulk carrier

Two:

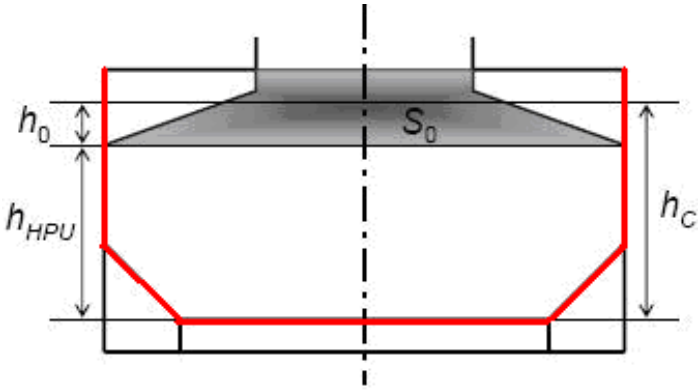

Single side bulk carrier

Three:

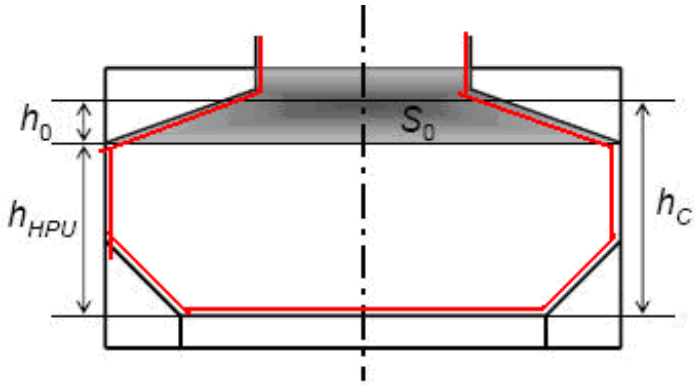

Single side bulk carrier