IACS Unified Requirements Regarding Steel Forgings and Steel Castings

Object of Amendment

Rules for the Survey and Construction of Steel Ships Part K
Guidance for the Survey and Construction of Steel Ships Part K

Reason for Amendment

IACS has established the requirements for mechanical properties, testing methods, and related matters for steel forgings and steel castings used in hull structures, machinery, and other applications in IACS Unified Requirements (URs) W7 and W8. It has also established similar requirements for grey cast iron and spheroidal graphite cast iron in URs W9 and W10. These URs have been incorporated into Part K of the Rules for the Survey and Construction of Steel Ships.

With regard to URs W7 and W8, some members of relevant industries requested a review of certain requirements, including the acceptance criteria for Charpy impact tests, the locations of test specimen sampling, and the casting methods of test blocks. These matters were examined by an expert group within IACS, and as a result, URs W7(Rev.5) and W8(Rev.5) were adopted in February and June 2025, respectively.

Furthermore, URs W9 and W10 had not been substantially revised since 2004, and some requirements were no longer aligned with current industry standards and practices. IACS, therefore, carried out a comprehensive review of the URs and adopted UR W9(Rev.3) and UR W10(Rev.3) in February 2025 as a result.

Accordingly, relevant requirements are amended based on URs W7(Rev.5), W8(Rev.5), W9(Rev.3), and W10(Rev.3 and Corr.1).

Outline of Amendment

The main contents of this amendment are as follows:

(1) Amendments relating to steel forgings (related to UR W7(Rev.5))
Amends requirements related to sampling methods for test specimens, acceptance criteria for impact tests, and alternative measures.

(2) Amendments relating to steel castings (related to UR W8(Rev.5))
Amends requirements by clearly specifying casting methods of test blocks and revising provisions related to alternative measures for impact tests, in line with UR W7(Rev.5).

(3) Amendments relating to grey cast iron (related to UR W9(Rev.3))
Amends requirements related to heat treatment, test blocks, mechanical properties, and related matters.

(4) Amendments relating to spheroidal graphite cast iron (related to UR W10(Rev.3 and Corr.1))
Amends requirements related to heat treatment and mechanical properties and adds applicable international standards as methods for evaluating the nodularity of graphite.

Effective Date and Application

This amendment applies to ships for which the date of contract for construction is on or after 1 January 2027.

ID:DD25-27

An asterisk (*) after the title of a requirement indicates that there is also relevant information in the corresponding Guidance.

DRAFT

Amended-Original Requirements Comparison Table (IACS Unified Requirements Regarding Steel Forgings and Steel Castings)

Amended	Original	Remarks
RULES FOR THE SURVEY AND CONSTRUCTION OF STEEL SHIPS **Part K MATERIALS** **Chapter 5 CASTINGS** **5.1 Steel Castings** **5.1.6 Mechanical Properties** **1** The mechanical properties of steel castings are to conform to the requirements given in **Table K5.2** using the test blocks specified in **5.1.8-3**.	**RULES FOR THE SURVEY AND CONSTRUCTION OF STEEL SHIPS** **Part K MATERIALS** **Chapter 5 CASTINGS** **5.1 Steel Castings** **5.1.6 Mechanical Properties** **1** The mechanical properties of the steel castings are to conform to the requirements given in **Table K5.2** using the test blocks specified in **5.1.8-2**.	Correct the reference number.

DRAFT

Amended-Original Requirements Comparison Table (IACS Unified Requirements Regarding Steel Forgings and Steel Castings)

Amended	Original	Remarks

Table K5.2 Mechanical Properties of Steel Casting

UR W8(Rev.5) / Table 3, 4

Kind		Grade [4]	Specified minimum tTensile strength [1] (N/mm^2)	Yield point or proof stress (N/mm^2) min.	Elongation ($L = 5.65\sqrt{A}$) (%) min.	Reduction of area (%) min.	Charpy V-notch impact test [2]	
							Test temperature (°C)	Minimum average energy [5] (J)
Steel castings not intended for welding	Carbon steel castings	*KSC*400	400 min.	200 min.	25 min.	40 min.	*AT*[3]	27
		*KSC*440	440 min.	220 min.	22 min.	30 min.		
		*KSC*480	480 min.	240 min.	20 min.	27 min.		
		*KSC*520	520 min.	260 min.	18 min.	25 min.		
		*KSC*560	560 min.	300 min.	15 min.	20 min.		
		*KSC*600	600 min.	320 min.	13 min.	20 min.		
	Alloy steel castings	*KSCA*550	550 min.	340 min.	16 min.	35 min.		
		*KSCA*600	600 min.	400 min.	16 min.	35 min.		
		*KSCA*650	650 min.	450 min.	14 min.	32 min.		
		*KSCA*700	700 min.	540 min.	12 min.	28 min.		
Steel castings intended for welding	Carbon steel castings	*KSC*400*W*	400 min.	200 min.	25 min.	40 min.	0	
		*KSC*440*W*	440 min.	220 min.	22 min.	30 min.		
		*KSC*480*W*	480 min.	240 min.	20 min.	27 min.		
		*KSC*520*W*	520 min.	260 min.	18 min.	25 min.		
		*KSC*560*W*	560 min.	300 min.	15 min.	20 min.		
		*KSC*600*W*	600 min.	320 min.	13 min.	20 min.		
	Alloy steel castings	*KSCA*550*W*	550 min.	355 min.	18 min.	30 min.		
		*KSCA*600*W*	600 min.	400 min.	16 min.	30 min.		
		*KSCA*650*W*	650 min.	450 min.	14 min.	30 min.		
		*KSCA*700*W*	700 min.	540 min.	12 min.	28 min.		

Notes:

(1) A tensile strength range of 150 N/mm^2 may additionally be specified.

(2) Special consideration may be given to alternative ~~requirements~~acceptance criteria for the Charpy V-notch impact test~~s~~ (which may be supported by historical and statistical test data), ~~depending on design and application~~or for alternative test and inspection arrangements, and subject to agreement with the Society ~~approval~~.

(3) *AT* refers to the ambient temperature specified in *ISO* 148-1:2016 (i.e. 23 °*C* ± 5 °*C*).

(4) For steel castings intended for welded construction, "*W*" is to be suffixed to their respective grade markings in accordance with **5.1.4-2**.

(5) When the absorbed energy of two or more test specimens among a set of test specimens is less in value than the specified minimum mean absorbed energy or when the absorbed energy of a single test specimens is less in value than 70 % of the specified minimum mean absorbed energy, the test is considered to be failed.

DRAFT

Amended	Original	Remarks
5.1.7 Mechanical Tests **2** Where the mechanical tests from the first test specimens selected fail to meet the requirements, additional tests may be conducted according to the requirements given in **1.4.4**.	**5.1.7 Mechanical Tests** **2** Where the tensile tests from the first test specimens selected fail to meet the requirements, additional tests may be conducted according to the requirements given in **1.4.4**.	UR W8(Rev.5) / 7.4
5.1.8 Selection of Test Specimens **1** Test specimens for steel castings are, after final heat treatment, to be taken from a test block either attached to the castings, cast integrally onto the castings or cast separately. However, test blocks may be separated from the body of the casting before final heat treatment in cases where deemed appropriate by the Society. Separately cast test blocks are to be heat treated together with the casting(s) they represent, in the same production furnace and to the same heat treatment procedure. For test blocks attached to the casting (or side-by-side) or integrally cast (or cast-on), the test blocks are not to be detached from the casting until the specified heat treatment has been completed, and they have been properly identified. The "one set of test specimens" referred to above includes one tensile test specimen and three impact test specimens.	**5.1.8 Selection of Test Specimens** **1** Test specimens for steel castings are, after final heat treatment, to be taken from the test block either attached to the castings, cast integrally onto the castings or cast separately. However, test blocks may be separated from the body of the casting before final heat treatment in cases where deemed appropriate by the Society. At least one test block is to be provided for each casting or batch of castings, and one set of test specimens is to be taken from each test block. The "one set of test specimens" referred to above includes one tensile test specimen and three shock test specimens.	UR W8(Rev.5) / 6.8 UR W8(Rev.5) / 6.9
2 At least one test block is to be provided for each casting or batch of castings. Unless otherwise agreed these test blocks are to be either attached to the castings (or side-by-side), integrally cast (or cast-on), or cast separately. Note 1: (1) Attached to the casting (or side-by-side): The test block is cast in the same mould and attached (or gated) to the casting with a common running system. (2) Integrally cast (or cast-on): The test block is attached directly to the casting by	(Newly added)	UR W8(Rev.5) / 6.2

DRAFT

Amended	Original	Remarks
its full section. (3) Cast separately: The test block is cast in a separate mould, poured with the same ladle as the casting under representative manufacturing conditions.		
3 The test block is to be in accordance with the following **(1)** or **(2)**:	**2** Test block is to be in accordance with the following **(1)** or **(2)**:	UR W8(Rev.5) / 6.3
(1) The preferred test block arrangement, where practical, is for the manufacturer to provide at least one 30 *mm* test block.[1]	(1) The preferred test block arrangement, where practical, is for the manufacturer to provide at least one 30 *mm* test block by either attached to the castings or cast integrally on the castings.[1]	
Note 1: The test results represent the material from which the castings have been poured and the subsequent heat treatment process and may not necessarily represent the properties of the castings. These properties can be affected by solidification conditions and the rate of cooling during heat treatment, which are in turn influenced by casting thickness, size, complexity and shape. The purpose of the test block is to provide a qualitative check to demonstrate the effective control of existing heat treatment processes and procedures.	Note 1: The test results represent the material from which the castings have been poured and the subsequent heat treatment process and may not necessarily represent the properties of the castings. These properties can be affected by solidification conditions and the rate of cooling during heat treatment, which are in turn influenced by casting thickness, size, complexity and shape. The purpose of the test bock is to provide a qualitative check to demonstrate the effective control of existing heat treatment processes and procedures.	Minor editorial correction (typographical error).
(2) (Omitted)	(2) (Omitted)	
4 The number of test blocks is to be as given in the following **(1)** through **(4)**:	**3** The number of test blocks is to be as given in the following **(1)** through **(4)**:	UR W8(Rev.5) / 6.4
(1) Except where specified otherwise by the Society, one test block is to be taken from each steel casting. Where the finished mass of one steel casting (as heat treated, hereinafter referred to as the "mass") exceeds 10 *tonnes*, at least two test blocks either attached to the casting (or side-by-side), or integrally cast (or cast-on) are to be provided for each steel casting. In such cases, the two test blocks are to be	(1) Except where specified otherwise by the Society, one test block is to be taken from each steel casting. In cases where the mass of one steel casting (as heat treated, hereinafter referred to as the "mass") is more than ten tons, two test blocks are to be taken from each steel casting, located as far as practicable from each other.	

DRAFT

Amended	Original	Remarks
taken from locations as far as practicable from each other.		
((2) and (3) are omitted.)	((2) and (3) are omitted.)	
(4) In cases where one steel casting is made from two or more casts, which are not mixed in a ladle prior to pouring, one test block is to be taken from each cast, notwithstanding the requirements in **(1)** or **(2)** above. For the test blocks cast separately, one test block is to be provided from each cast poured. For test blocks attached to the casting (or side-by-side) or integrally cast (or cast-on), they are to be located as far as practicable from each other.	(4) In cases where one steel casting is made from two or more casts, which are not mixed in a ladle prior to pouring, one test block is to be taken from each charge regardless of the requirements in **(1)** or **(2)** above. These are to be attached to the casting or cast integrally on the castings at locations as widely separated as possible.	UR W8(Rev.5) / 6.5
5.5 Grey Iron Castings or Flake Graphite Iron Castings	**5.5 Gray Iron Castings**	
5.5.1 Application	**5.5.1 Application**	
1 The requirements in this section apply to grey iron castings or flake graphite iron castings (hereinafter referred to as "iron castings" in **5.5**).	**1** The requirements in this section are to apply to the gray iron castings (hereinafter referred to as "iron castings").	UR W9(Rev.3) / 1.1
2 Iron castings other than those specified in **5.5** are to comply with the requirements given in **1.1.1-3**.	**2** Iron castings other than specified in **5.5** are to comply with the requirements given in **1.1.1-3.**	
3 The requirements are applicable to unalloyed and low-alloyed grey iron casting grades.	(Newly added)	UR W9(Rev.3) / 1.3
4 The requirements cover grades of grey iron castings classified on the basis of tensile strength measured on tensile test specimen prepared from separately cast, side-by-side cast test blocks or cast-on test blocks.	(Newly added)	UR W9(Rev.3) / 1.5
5 When castings are intended for high temperature application, additional testing at the design temperature may be required when specially agreed with the Society.	(Newly added)	UR W9(Rev.3) / 1.6

DRAFT

Amended-Original Requirements Comparison Table (IACS Unified Requirements Regarding Steel Forgings and Steel Castings)

Amended	Original	Remarks
5.5.2 Manufacturing Process Suitable mechanical methods such as grinding are to be employed for the removal of surplus material from iron castings in accordance with recognised good practice. Thermal cutting processes such as flame cutting, scarfing or air-arc gouging are not acceptable, except as a preliminary operation to mechanical methods. **5.5.3 Kinds** Iron castings are classified as specified in **Table K5.9**.	**5.5.2 Manufacturing Process** Suitable mechanical methods such as grinding are to be employed for the removal of surplus material from iron castings. Thermal cutting processes are not acceptable, except as a preliminary operation to mechanical methods. **5.5.3 Kinds** The iron castings are classified as specified in **Table K5.9**.	UR W9(Rev.3) / 2.2

DRAFT

Amended-Original Requirements Comparison Table (IACS Unified Requirements Regarding Steel Forgings and Steel Castings)

Amended	Original	Remarks

Table K5.9 Kinds and Mechanical Properties of Iron Castings

UR W9(Rev.3) / Table 1

~~Material grade~~	~~Tensile strength(1) (*N/mm²*)~~
~~*KFC*20~~	~~200 min.~~
~~*KFC*25~~	~~240 min.~~
~~*KFC*30~~	~~290 min.~~
~~*KFC*35~~	~~340 min.~~

~~Note:~~

~~(1) The standards given in this Table are for the test sample taken from iron casting separately cast. Where the test sample cast integral with the casting is used, the standards applied are left to the discretion of the Society.~~

Material grade	Relevant wall thickness *t*, (*mm*)(1)		Tensile strength (*N/mm²*)(4)		
			Values applicable to **Fig. K5.2** Type II test blocks only(2)		Cast-on test blocks (3)
	≥	<	≥	≤	≥
*KFC*200	2.5	5	200	300	-
	5	10			-
	10	20			-
	20	40			170
	40	80			155
	80	150			140
	150	300			130
*KFC*225	5	10	225	325	-
	10	20			-
	20	40			190
	40	80			170
	80	150			155
	150	300			145
*KFC*250	5	10	250	350	-
	10	20			-
	20	40			210
	40	80			190
	80	150			170
	150	300			160
*KFC*275	10	20	275	375	-
	20	40			230
	40	80			210

DRAFT

Amended			Original			Remarks
	80	150			190	
	150	300			180	
*KFC*300	10	20	300	400	-	
	20	40			250	
	40	80			225	
	80	150			210	
	150	300			190	
*KFC*350	10	20	350	450	-	
	20	40			290	
	40	80			260	
	80	150			240	
	150	300			220	

Notes:

(1) For relevant wall thickness greater than 300 *mm*, the manufacturer and the purchaser are to agree on the type and size of the cast sample and on the minimum required tensile strength value.

(2) For test block dimensions other than **Fig. K5.2** Type II, the test block type and the minimum tensile value or range of tensile values to be obtained shall be agreed upon between the manufacturer, the purchaser and the Society.

(3) The minimum tensile strength values are applicable to cast-on test blocks, where the relevant wall thickness for the casting has been agreed.

(4) If a particular type of test block is to be specified, a "/" is added to the designation, followed by a letter indicating the type of test block:

/*S* = separately cast test block or side-by-side cast test block.

/*U* = cast-on test block.

/*C* = sample cut from casting.

DRAFT

Amended	Original	Remarks
5.5.4 Chemical Composition The chemical composition of iron castings is to be suitable to ensure the required mechanical properties, unless otherwise specified by the Society. Where deemed necessary by the Society, the chemical composition of ladle samples is to be reported.	**5.5.4 Chemical Composition** The chemical composition of iron castings is to be suitable to obtain the specified mechanical properties. Where deemed necessary by the Society, the Society may require the manufacturer to be carried out an analysis of each melt in ladle.	UR W9(Rev.3) / 4.1
5.5.5 Heat Treatment **1** Iron castings may be subjected to appropriate heat treated, if necessary.	**5.5.5 Heat Treatment** The iron castings may be carried out by appropriate heat treatments if necessary.	UR W9(Rev.3) / 5.1
2 The delivery condition is to meet the design and application requirements. It is the manufacturer's responsibility to select the appropriate heat treatment method and cycle. The description of the entire heat treatment method and cycle is to be submitted to the Society, including any surface hardening.	(Newly added)	UR W9(Rev.3) / 5.2
3 Castings for components such as engine blocks, where dimensional stability and freedom from residual stresses are important, may require to be given a stress relieving heat treatment. The manufacturer is to control the temperature in order to avoid any detrimental effects on the microstructure and mechanical properties of the casting.	(Newly added)	UR W9(Rev.3) / 5.3
4 Where heat treatment is required, it is to be carried out in properly constructed furnaces which are efficiently maintained, subjected to regular temperature uniformity survey and have adequate means for control and recording of temperature. The furnace dimensions are to be such as to allow the whole casting to be uniformly heated to the necessary temperature. In the case of very large castings alternative methods for heat treatment will be specially considered by the Society.	(Newly added)	UR W9(Rev.3) / 5.4
5 Records of heat treatment of each casting or batch of castings are to be maintained by the manufacturer and are to	(Newly added)	UR W9(Rev.3) / 5.5

DRAFT

Amended	Original	Remarks
be presented to the Surveyor on request.		
5.5.6 Mechanical Properties*	**5.5.6 Mechanical Properties***	
1 Mechanical properties of iron castings are to comply with the requirements given in **Table K5.9**. The value selected for the specified minimum tensile strength is to be not less than 200 N/mm^2 but subject to the relevant additional requirements. The fractured surfaces of all tensile test specimens are to be granular and grey in appearance.	**1** Mechanical properties of iron castings are to comply with the requirements given in **Table K5.9**.	UR W9(Rev.3) / 7.2
5.5.7 Mechanical Test	**5.5.7 Mechanical Test**	
1 The mechanical test for iron castings is a tensile test and is to be carried out in accordance with the requirements given in **Chapter 2**.	**1** Mechanical test for iron castings is tensile test, and is to be carried out in accordance with the requirements given in **Chapter 2**.	
2 Where the tensile test fails to meet the requirements, a retest may be carried out in accordance with the requirements in **1.4.4**. In this case, however, test specimens are to be taken out of other test samples.	**2** Where tensile test fails to meet the requirements, retest may be carried out in accordance with the requirements in **1.4.4**. In this case, however, test specimens are to be taken out of other test samples.	UR W9(Rev.3) / 7.3
3 When the test specimen failure is attributable to flaw, cavity and other detrimental casting defects, or defective test specimen due to incorrect pouring or machining, then the results of the test may be discarded, and a further test conducted on the spare test specimen.	(Newly added)	UR W9(Rev.3) / 7.4
5.5.8 Selection of Test Specimens	**5.5.8 Selection of Test Specimens**	
1 Separately cast test blocks, or side-by-side test blocks are used unless otherwise agreed between the manufacturer and purchaser. The test blocks are to be cast from the same ladle as the casting, in moulds of the same material and under the same conditions as for the casting and are not to be stripped from the moulds until the metal temperature is below 500 *°C*. The test blocks are generally to be in the form of cylindrical bars 30 *mm* in diameter and of a suitable length (*see* **Fig. K5.2**, Type II). Alternatively, test blocks of other	**1** Separately cast test samples of iron casting are to be used.	UR W9(Rev.3) / 6.2

Amended	Original	Remarks
types (*see* **Fig. K5.2**, Types I, III and IV) may be specified based on the relevant wall thickness of the casting and when agreed between the manufacturer and purchaser. Note: (1) Separately cast test blocks: Test blocks cast in a separate sand mould under representative manufacturing conditions and material. (2) Side-by-side cast test blocks: The test block is cast in the mould alongside the castings, with a connected running system. (3) Relevant wall thickness: Section of the casting, agreed between the manufacturer and the purchaser, to which the determined mechanical properties apply.		
(Deleted)	**2** Test samples are to be cast from the same ladle as the one for castings in the moulds of the same type of material as the one for the moulds of the castings and are not to be stripped from the moulds until the metal temperature is below 500 °C. Test samples are to be in the form of bars 30 *mm* in diameter and of a suitable length. When two or more test samples are cast simultaneously in a single mould, the bars are to be at least 50 *mm* apart from each other (*See* **Fig. K5.2**).	Merged into above 1.
2 Separately cast test blocks shall be cast from the same ladle and in a mould material with comparable thermal behaviour as the castings they represent. The cast test blocks are not to be stripped from the moulds until the metal temperature is below 500 °*C*. Note: For side-by-side test blocks, when mechanical properties are required for a series of castings belonging to the same test unit, the cast blocks shall be produced in the last moulds	(Newly added)	UR W9(Rev.3) / 6.3

DRAFT

Amended	Original	Remarks
poured.		
3 Subject to agreement between the manufacturer and the purchaser, cast-on test blocks may be used when a casting is more than 20 *mm* wall thickness, and its mass exceeds 200 *kg*. The type and location of the cast-on test blocks are to be selected to provide approximately the same cooling conditions as for the casting it represents. The cast-on test blocks are to have a general shape as indicated in either **Fig. K5.3**, Type 1 or Type 2 with the corresponding dimensions. The length *L* (*see* **Fig. K5.3**, Type 1 and Type 2) is to be determined according to the tensile test specimen length and the gripping arrangement.	(Newly added)	UR W9(Rev.3) / 6.4
Note: (1) Two possible sets of sizes are shown in **Fig. K5.3**, Type 1 and Type 2, with the larger test block size option shown in brackets. The small-size set is used for castings of wall thickness < 100 *mm*, and the large-size set is used for castings of wall thickness ≥ 100 *mm*. The choice of the cast-on test block type (**Fig. K5.3**, Type 1 or Type 2) is to be agreed upon between the manufacturer and the purchaser. (2) Cast-on test blocks: Test blocks attached directly to the casting.		
4 One tensile test specimen of iron castings is to be taken from the test samples required by the following.	**3** One tensile test specimen of iron castings is to be taken from the test samples required by the followings.	
(1) (Omitted)	(1) (Omitted)	
(2) Notwithstanding the requirement in **(1)** above, for continuous melting of the same grade of cast iron in large tonnages the mass of a batch may be increased to the output of 2 *hours* of pouring. The minimum number of test blocks to be provided is to be one tensile test specimen representing every 2 *hours* of production from the melting furnace.	(2) Notwithstanding the requirement in **(1)** above, for continuous melting of the same grade of casting steels, one lot is the mass of a batch which may be increased to the output of 2 *hours* of pouring. One test sample is to be taken from each one lot.	UR W9(Rev.3) / 6.7

DRAFT

Amended-Original Requirements Comparison Table (IACS Unified Requirements Regarding Steel Forgings and Steel Castings)

Amended	Original	Remarks
(3) (Omitted)	(3) (Omitted)	
5 If the same grade of cast iron is melted in large quantities and a system controlled melting technology with strict production process control is adopted, and where appropriate inspection such as chill testing, chemical analysis or thermal analysis are carried out for each heat, then test blocks may be taken at longer intervals. This is to be subject to agreement between the manufacturer, the purchaser and the Society. Where a national/international standard is being applied, then the frequency specified in the reference standard is not to be reduced.	(Newly added)	UR W9(Rev.3) / 6.8
6 Where castings are supplied in the heat treated condition, the test blocks are to be heat treated together with the castings which they represent. For cast-on test blocks, the block is not to be cut off from the casting until after the heat treatment.	(Newly added)	UR W9(Rev.3) / 6.10
7 One tensile test specimen is to be prepared from each cast test block, and the 30 *mm* diameter cylindrical test bar is to be machined to the dimensions given in **Chapter 2**. Where test blocks of other dimensions are specially required, the tensile test specimens are to be machined to the dimensions shown in **Fig. K5.2**.	(Newly added)	UR W9(Rev.3) / 6.11

DRAFT

Amended	Original	Remarks
Fig. K5.2 ~~Test Sample Shapes (Units: *mm*)~~ Separately Cast or Side-by-side Test Blocks 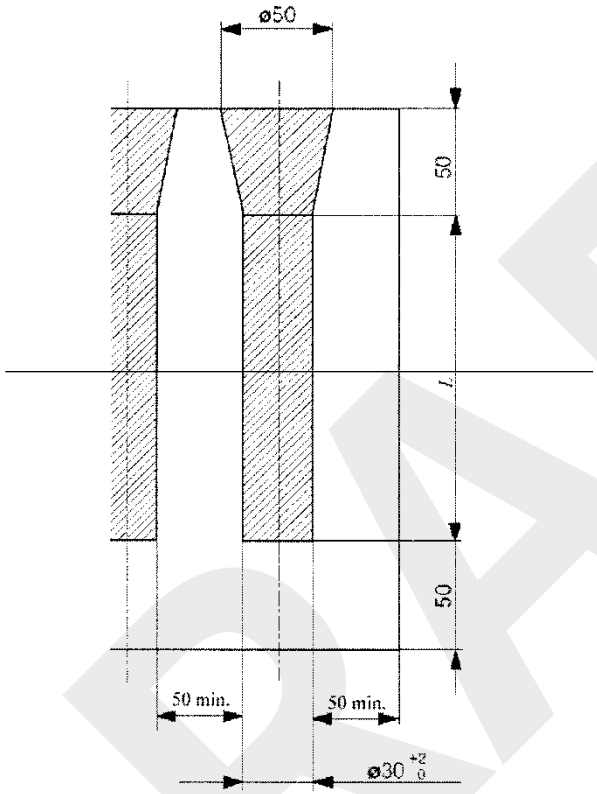 ~~Note:~~ ~~*L* : Parallel part length~~		UR W9(Rev.3) / Fig.1

DRAFT

Amended-Original Requirements Comparison Table (IACS Unified Requirements Regarding Steel Forgings and Steel Castings)

Amended	Original	Remarks

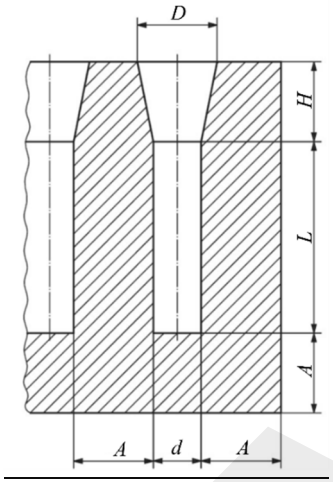

Test block types	Dimensions (*mm*)					Preferred diameter of tensile test specimen (*mm*)
	d (+2/−0)	*L*	*D* (±5)	*H*	*A*	
Type I	15	A function of the test specimen length	40	≥40	≥40	10
Type II	30		50	≥50	≥50	20
Type III	45		70	≥60	≥60	32
Type IV	75		105	≥90	≥90	32

DRAFT

Amended	Original	Remarks
Fig. K5.3 Cast-on Test Blocks (Dimensions of Type 1 and Type 2: *mm*) 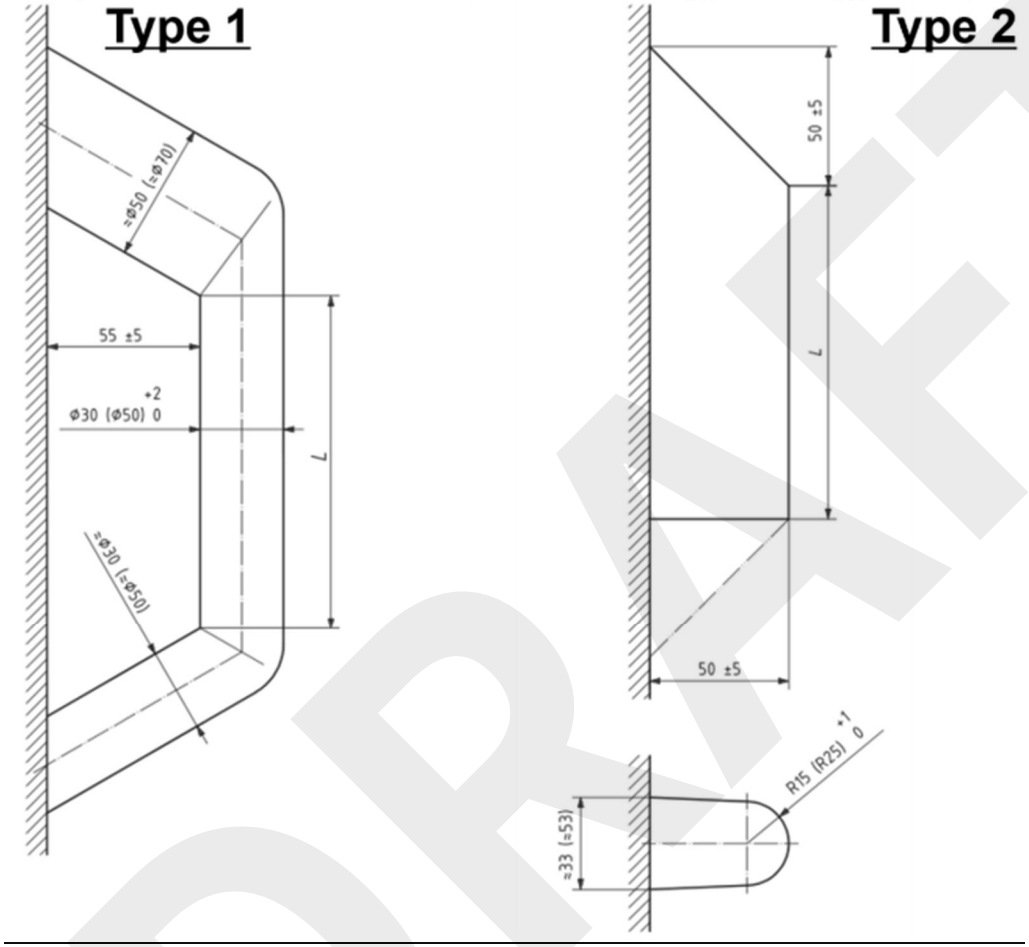		UR W9(Rev.3) / Fig.2

DRAFT

Amended-Original Requirements Comparison Table (IACS Unified Requirements Regarding Steel Forgings and Steel Castings)

Amended	Original	Remarks
5.5.9 Surface Inspection and Dimension Inspection **1** All castings are to be cleaned and adequately prepared for examination; suitable methods include pickling, caustic cleaning, wire brushing, local grinding, shot or sand blasting. The surfaces are not to be hammered, peened or treated in any way which may obscure defects.	**5.5.9 Surface Inspection and Dimension Inspection** Surface inspection and dimension inspection are to be carried out in accordance with the requirements in **5.1.9**.	UR W9(Rev.3) / 8.1
2 Visual inspection and verification of dimensions is the responsibility of the manufacturer. The visual examination is to include all external, and where applicable, internal surfaces. The castings are to be free from defects which are detrimental to practical use. The castings accepted by the manufacturer, and which are subject to certification by the Society are additionally to be presented to the Surveyor for visual examination before final acceptance.	(Newly added)	UR W9(Rev.3) / 8.2
3 In the event of any casting proving defective during subsequent machining or testing it is to be rejected notwithstanding any previous certification.	(Newly added)	UR W9(Rev.3) / 8.5
5.5.12 Metallographic Examination	**(Newly added)**	
1 When specified by the manufacturer, the Society, agreed national/international standard or the purchaser, the microstructure of grey iron castings is to be reported.		UR W9(Rev.3) / 9.1
2 Unless otherwise specified by the Society or the purchaser, the metallographic examination is to be carried out in accordance with recognised national or international standards (such as *ISO* 945-1:2019).		UR W9(Rev.3) / 9.2
3 Unless otherwise specified, the microstructure is to be substantially free of primary cementite and massive steadite and is to consist of flake graphite in a matrix of ferrite and/or pearlite.		UR W9(Rev.3) / 9.3
4 Unless otherwise specified, the graphite structure is to be primarily distribution (Form I) Type A in accordance with *ISO* 945-1:2019.		UR W9(Rev.3) / 9.4

DRAFT

Amended-Original Requirements Comparison Table (IACS Unified Requirements Regarding Steel Forgings and Steel Castings)

Amended	Original	Remarks
5.5.13 Marking and Test Certificate	**5.5.12 Marking**	
1 The manufacturer is to adopt a system of identification, which will enable all finished castings to be traced to the original cast. The Surveyor is to be given full facilities for so tracing the castings when required.	Marking of the iron castings is to follow the requirements in **5.1.12.**	UR W9(Rev.3) / 11.1
2 In addition to the requirements in **5.1.12**, iron castings are to be marked with the following **(1)** and **(2)** particulars: (1) Where applicable, test pressure (2) Date of final inspection	(Newly added)	UR W9(Rev.3) / 11.2
3 Notwithstanding **-1** above, where small castings are manufactured in large numbers, modified arrangements for identification may be specially agreed with the Society.	(Newly added)	UR W9(Rev.3) / 11.3
4 In addition to **1.5.2**, the test certificate for iron castings is to contain the following **(1)** through **(5)** particulars: (1) Description of castings (2) Where applicable, general details of heat treatment including temperatures and holding times (3) Where applicable, test pressure (4) Visual inspections and where applicable, results of any additional non-destructive tests (5) Where applicable, results of the metallographic examination	(Newly added)	UR W9(Rev.3) / 12.1
5.6 Spheroidal Graphite Iron Castings or Ductile Iron Castings	**5.6 Spheroidal or Nodular Graphite Iron Castings**	
5.6.1 Application	**5.6.1 Application**	
1 The requirements are to apply to spherical graphite iron castings or ductile iron castings (hereinafter referred to	**1** The requirements are to apply to the spherical or nodular graphite iron castings (hereinafter referred to as “iron	UR W10(Rev.3, Corr.1) / 1.1

DRAFT

Amended-Original Requirements Comparison Table (IACS Unified Requirements Regarding Steel Forgings and Steel Castings)

Amended	Original	Remarks
as “iron castings” in **5.6**).	castings”).	
2 The requirements are to apply to iron castings where the design and acceptance tests are related to mechanical properties at low or room temperature.	(Newly added)	UR W10(Rev.3, Corr.1) / 1.2
3 For iron castings intended for service at an elevated temperature, additional test requirements may be necessary where deemed necessary by the Society.	(Newly added)	UR W10(Rev.3, Corr.1) / 1.3
4 The requirements cover ferritic-to-pearlitic and solid solution strengthened ferritic grades of iron castings classified on the basis of mechanical properties measured on test specimens prepared from either separately cast, side-by-side cast or cast-on test blocks.	(Newly added)	UR W10(Rev.3, Corr.1) / 1.4
5 Iron castings other than those specified in **5.6** are to comply with the requirements given in **1.1.1-3**.	**2** Iron castings other than specified in **5.6** are to comply with the requirements given in **1.1.1-3**.	UR W10(Rev.3, Corr.1) / 1.5
5.6.2 Manufacturing Process	**5.6.2 Manufacturing Process**	
1 Suitable mechanical methods, such as grinding, are to be employed for the removal of surplus material from iron castings in accordance with recognised good practice. Thermal cutting processes such as flame cutting, scarfing or arc-air gouging are not acceptable, except as a preliminary operation to mechanical methods.	**1** Suitable mechanical methods such as grinding are to be employed for the removal of surplus material from iron castings. Thermal cutting process is not acceptable, except as a preliminary operation to mechanical methods.	UR W10(Rev.3, Corr.1) / 2.2
5.6.3 Kinds	**5.6.3 Kinds**	
Iron castings are classified as specified in **Table K5.10** and **Table K5.11**.	The iron castings are classified as specified in **Table K5.10**.	

DRAFT

Amended	Original	Remarks

Table K5.10 ~~Kinds~~Types and Mechanical Properties of Iron ~~c~~Castings
(Test Specimens Machined from Test Blocks with a Standard Thickness of 25 *mm*)

~~Material grade~~	~~Tensile test~~			~~Impact test~~	
	~~Tensile strength (N/mm^2)~~	~~Proof stress[2] (N/mm^2)~~	~~Elongation (%) ($L = 5.65\sqrt{A}$)~~	~~Testing temperature (°C)~~	~~Minimum mean absorbed energy (J)~~
~~*KFCD*37~~	~~360~~	~~235~~	~~17~~	~~—~~	~~—~~
~~*KFCD*40~~	~~390~~	~~255~~	~~12~~	~~—~~	~~—~~
~~*KFCD*45~~	~~440~~	~~285~~	~~10~~	~~—~~	~~—~~
~~*KFCD*50~~	~~490~~	~~325~~	~~7~~	~~—~~	~~—~~
~~*KFCD*60~~	~~590~~	~~370~~	~~3~~	~~—~~	~~—~~
~~*KFCD*70~~	~~680~~	~~420~~	~~2~~	~~—~~	~~—~~
~~*KFCD*80~~	~~780~~	~~480~~	~~2~~	~~—~~	~~—~~
~~*KFCD*36*S*~~	~~350~~	~~220~~	~~22~~	~~20~~	~~17(14)[3]~~
~~*KFCD*41*S*~~	~~400~~	~~250~~	~~18~~	~~20~~	~~14 (11)[3]~~

~~Notes:~~

~~(1) The standards given in this Table are for the test sample taken from iron casting separately cast. Where the test sample cast integral with the casting is used, the standards applied are left to the discretion of the Society.~~

~~(2) The proof stress required in the Table is shown for reference.~~

~~(3) When the absorbed energy of two or more test specimens among a set of test specimens is less in value than the specified minimum mean absorbed energy or when the absorbed energy of a single test specimen is less in value than shown in brackets in the Table, the test is considered to be failed.~~

UR W10(Rev.3, Corr.1) / Table 1

DRAFT

Amended-Original Requirements Comparison Table (IACS Unified Requirements Regarding Steel Forgings and Steel Castings)

Amended	Original	Remarks

Spheroidal graphite cast iron type	Material grade	Proof strength (N/mm^2) (min)	Tensile strength (N/mm^2) (min)	Elongation ($L = 5.65\sqrt{A}$) (%)	Average impact energy (J) (min)			Recommended matrix structure
					RT[2] (23±5) (°C)	LT[1] (−20±2) (°C)	LT[1] (−40±2) (°C)	
Ferritic-to-pearlitic	*KFCD*350-22-*LT*	220	350	22	-	-	12	Ferrite
	*KFCD*350-22-*RT*	220	350	22	17	-	-	Ferrite
	*KFCD*350-22	220	350	22	-	-	-	Ferrite
	*KFCD*400-18-*LT*	240	400	18	-	12	-	Ferrite
	*KFCD*400-18-*RT*	250	400	18	14	-	-	Ferrite
	*KFCD*400-18	250	400	18	-	-	-	Ferrite
	*KFCD*400-15	250	400	15	-	-	-	-
	*KFCD*450-10	310	450	10	-	-	-	Ferrite
	*KFCD*500-7	320	500	7	-	-	-	Ferrite-pearlite
	*KFCD*550-5	350	550	5	-	-	-	Ferrite-pearlite
	*KFCD*600-3	370	600	3	-	-	-	Pearlite-ferrite
	*KFCD*700-2	420	700	2	-	-	-	Pearlite
	*KFCD*800-2	480	800	2	-	-	-	Pearlite or tempered martensite
	*KFCD*900-2	600	900	2	-	-	-	Tempered martensite or bainite
Solid solution strengthened ferritic	*KFCD*450-18	350	450	18	-	-	-	Ferrite[3]
	*KFCD*500-14	400	500	14	-	-	-	Ferrite[3]
	*KFCD*600-10	470	600	10	-	-	-	Ferrite[3]

Notes:

(1) *LT*: Low temperature

(2) *RT*: Room temperature

(3) The matrix structure is to be predominantly ferrite with a maximum pearlite content of 5 %. The amount of free cementite is not to exceed 1 %.

UR W10(Rev.3, Corr.1) / Table 1

DRAFT

Amended-Original Requirements Comparison Table (IACS Unified Requirements Regarding Steel Forgings and Steel Castings)

Amended	Original	Remarks

Table K5.11 Types and Mechanical Properties of Iron Castings
(Test Specimens Machined from Test Blocks for Castings with Relevant Wall Thickness Exceeding 30 *mm*[3][7])

Spheroidal graphite cast iron type	Material grade	Relevant wall thickness, *t* (*mm*)[4][5]	Proof strength (N/mm^2) (min)	Tensile strength (N/mm^2) (min)	Elongation ($L = 5.65\sqrt{A}$) (%)	Average impact energy (*J*) (min) *RT*[2] (23±5) (°C)	Average impact energy (*J*) (min) *LT*[1] (−20±2) (°C)	Average impact energy (*J*) (min) *LT*[1] (−40±2) (°C)	Recommended matrix structure
Ferritic-to-pearlitic	*KFCD*350-22-*LT*	30< *t* ≤60	210	330	18	-	-	12	Ferrite
		60< *t* ≤200	200	320	15	-	-	10	
	*KFCD*350-22-*RT*	30< *t* ≤60	220	330	18	17	-	-	Ferrite
		60< *t* ≤200	210	320	15	15	-	-	
	*KFCD*350-22	30< *t* ≤60	220	330	18	-	-	-	Ferrite
		60< *t* ≤200	210	320	15	-	-	-	
	*KFCD*400-18-*LT*	30< *t* ≤60	230	380	15	-	12	-	Ferrite
		60< *t* ≤200	220	360	12	-	10	-	
	*KFCD*400-18-*RT*	30< *t* ≤60	250	390	15	14	-	-	Ferrite
		60< *t* ≤200	240	370	12	12	-	-	
	*KFCD*400-18	30< *t* ≤60	250	390	15	-	-	-	Ferrite
		60< *t* ≤200	240	370	12	-	-	-	
	*KFCD*400-15	30< *t* ≤60	250	390	14	-	-	-	-
		60< *t* ≤200	240	370	11	-	-	-	
	*KFCD*450-10	30< *t* ≤60	To be agreed upon between the Manufacturer and the purchaser			-	-	-	Ferrite
		60< *t* ≤200				-	-	-	
	*KFCD*500-7	30< *t* ≤60	300	450	7	-	-	-	Ferrite-pearlite
		60< *t* ≤200	290	420	5	-	-	-	
	*KFCD*550-5	30< *t* ≤60	330	520	4	-	-	-	Ferrite-pearlite
		60< *t* ≤200	320	500	3	-	-	-	
	*KFCD*600-3	30< *t* ≤60	360	600	2	-	-	-	Pearlite-ferrite
		60< *t* ≤200	340	550	1	-	-	-	
	*KFCD*700-2	30< *t* ≤60	400	700	2	-	-	-	Pearlite
		60< *t* ≤200	380	650	1	-	-	-	
	*KFCD*800-2	30< *t* ≤60	To be agreed upon between the Manufacturer and the purchaser			-	-	-	Pearlite or tempered martensite
		60< *t* ≤200				-	-	-	
	*KFCD*900-2	30< *t* ≤60	To be agreed upon between the Manufacturer and the purchaser			-	-	-	Tempered martensite or bainite
		60< *t* ≤200				-	-	-	

UR W10(Rev.3, Corr.1) / Table 2

DRAFT

Amended-Original Requirements Comparison Table (IACS Unified Requirements Regarding Steel Forgings and Steel Castings)

Amended										Original										Remarks
Solid solution strengthened ferritic	*KFCD*450-18	30≤ *t* ≤60	340	430	14	-	-	-	Ferrite(6)											
		t >60	To be agreed upon between the Manufacturer and the purchaser			-	-	-												
	*KFCD*500-14	30≤ *t* ≤60	390	480	12	-	-	-	Ferrite(6)											
		t >60	To be agreed upon between the Manufacturer and the purchaser			-	-	-												
	*KFCD*600-10	30≤ *t* ≤60	450	580	8	-	-	-	Ferrite(6)											
		t >60	To be agreed upon between the Manufacturer and the purchaser			-	-	-												

Notes:

(1) *LT*: Low temperature

(2) *RT*: Room temperature

(3) Test block dimensions are selected on the basis of the relevant wall thickness as specified in **Fig. K5.6** or **Fig. K5.7** as applicable.

(4) For relevant wall thickness ≤ 30 *mm*, the mechanical property requirements of **Table K5.10** are to be applied.

(5) For relevant wall thickness greater than 200 *mm*, subject to the special consideration by the Society, the manufacturer and the purchaser are to agree on the minimum mechanical properties, the type and size of the cast block, and microstructure requirements.

(6) The matrix structure should be predominantly ferrite with a maximum pearlite content of 5 %. The amount of free cementite is not to exceed 1 %.

(7) If a particular type of test block is to be specified, a "/" is added to the designation, followed by a letter indicating the type of test block:

/*S* = separately cast test block or side-by-side cast test block.

/*U* = cast-on test block.

/*C* = sample cut from casting.

DRAFT

Amended-Original Requirements Comparison Table (IACS Unified Requirements Regarding Steel Forgings and Steel Castings)

Amended	Original	Remarks
5.6.4 Chemical Composition Unless otherwise required by the Society for specific applications, the chemical composition of iron castings is left to the discretion of the manufacturer, who is to ensure that it is suitable to obtain the mechanical properties specified for the casting grade. Where deemed necessary by the Society, the chemical composition of ladle samples is to be reported.	**5.6.4 Chemical Composition** **1** The chemical composition of iron castings is to be suitable to obtain the specified mechanical properties. Where deemed necessary by the Society, the Society may require the manufacturer to carry out an analysis of each melt in ladle.	UR W10(Rev.3, Corr.1) / 4.1
(Deleted)	**2** A dispersed spheroidal or nodular form of graphite is generally to be at least 90 %. The Society may require the confirmation of a dispersed spheroidal or nodular form of graphite if deemed necessary by the Society.	Deleted, as the same requirement is specified in 5.6.12-12 based on UR W10.
5.6.5 Heat Treatment **1** Except as required by -3, iron castings may be supplied in a suitably heat-treated condition, if necessary.	**5.6.5 Heat Treatment** Iron castings may be supplied in a suitable heat treatment if necessary. For *KFCD*36*S* and *KFCD*41*S*, fertilizing heat treatment is to undergo.	UR W10(Rev.3, Corr.1) / 5.1
2 The delivery condition is to meet the design and application requirements. It is the manufacturer's responsibility to select the appropriate heat treatment method and cycle. The description of the entire heat treatment method and cycle is to be submitted to the Society, including any surface hardening.	(Newly added)	UR W10(Rev.3, Corr.1) / 5.2
3 Iron castings for components such as crankshafts and engine bedplates, where dimensional stability and freedom from residual stresses are important, it may be required that castings be given a suitable tempering or stress relieving heat treatment. This is to be carried out after any refining heat treatment and before machining. The Charpy V-notch impact tested iron casting grades may require a ferritizing heat treatment. The manufacturer is to control the temperature in order to avoid any detrimental effects to the microstructure and mechanical properties of the casting.	(Newly added)	UR W10(Rev.3, Corr.1) / 5.3
4 Heat treatment is to be carried out in properly	(Newly added)	UR W10(Rev.3, Corr.1) /

Amended	Original	Remarks
constructed furnaces which are efficiently maintained, subjected to regular temperature uniformity surveys and have adequate means for control and recording of temperature. The furnace dimensions are to be such as to allow the whole casting to be uniformly heated to the necessary temperature. In the case of very large castings, alternative methods for heat treatment will be specially considered by the Society.		5.5
5 Records of heat treatment of each casting or batch are to be maintained by the manufacturer and are to be presented to the Surveyor on request.	(Newly added)	UR W10(Rev.3, Corr.1) / 5.6
5.6.6 Mechanical Properties*	**5.6.6 Mechanical Properties***	
1 Mechanical properties of iron castings are to comply with the requirements given in **Table K5.10** and **Table K5.11**.	**1** Mechanical properties of iron castings are to comply with the requirements given in **Table K5.10**.	UR W10(Rev.3, Corr.1) / 7.3
2 The intermediate values of those tabulated in **Table K5.10** and **Table K5.11** may be applicable where approval of the Society is obtained. In this case, the values are to be obtained by interpolation and counting fractions over 0.5 as 1.0 or disregarding the rest.	**2** Intermediate value of those tabulated in **Table K5.9** may be applicable where approval of the Society is obtained. In this case, the values are to be obtained by interpolation and counting fractions over 0.5 as 1.0 or disregarding the rest.	
3 Where Brinell hardness testing is relevant to the application, then a suitable testing method and acceptance criteria consistent with recognised national/international standards (e.g., *ISO* 1083:2018 and *ISO* 6506-1:2014) may be considered subject to the approval of the Society.	(Newly added)	UR W10(Rev.3, Corr.1) / 7.4
5.6.7 Mechanical Tests	**5.6.7 Mechanical Tests**	
1 Test material, sufficient for the required tests and for possible re-test purposes, is to be provided for each iron casting or batch of iron castings.	(Newly added)	UR W10(Rev.3, Corr.1) / 6.1, 6.10, 6.11
2 Mechanical tests of iron castings are the tensile test and the impact test according to the grade of iron castings and are to be carried out in accordance with the requirements in **Chapter 2**.	**1** Mechanical tests of iron castings are the tensile test and the impact test according to the grade of iron castings, and are to be carried out in accordance with the requirements in **Chapter 2**.	

DRAFT

Amended-Original Requirements Comparison Table (IACS Unified Requirements Regarding Steel Forgings and Steel Castings)

Amended	Original	Remarks
3 (Omitted)	**2** Where the result of the tensile test is failed, retest may be carried out in accordance with the requirements in **1.4.4**. In this case, test specimens are to be taken from other test samples.	UR W10(Rev.3, Corr.1) / 7.5
4 (Omitted)	**3** Where the result of the impact test is failed, retest may be carried out in accordance with the requirements in **3.1.10-3**. In this case, test specimens are to be taken from other test samples.	UR W10(Rev.3, Corr.1) / 7.5
5 Charpy V-notch impact tests are additionally required for the low temperature (*LT*) and room temperature (*RT*) grades. Where Charpy V-notch test specimens are used, the dimensions and testing procedures are to be in accordance with the requirements in **Chapter 2**. When required, Charpy V-notch impact tests are to be carried out in accordance with the requirements in **Chapter 2**. Unless otherwise agreed, all tests are to be carried out in the presence of the Surveyors.	(Newly added)	UR W10(Rev.3, Corr.1) / 6.12
6 At the option of the manufacturer and with the agreement of the Society, when an iron casting or batch of iron castings has failed to meet the test requirements, it may be re-heat treated and re-submitted for acceptance tests.	(Newly added)	UR W10(Rev.3, Corr.1) / 6.13
7 When required by the applicable Rules, iron castings are to be pressure tested before final acceptance. The Surveyor is to be given the opportunity to witness these tests.	(Newly added)	UR W10(Rev.3, Corr.1) / 8.4
5.6.8 Selection of Test Specimens	**5.6.8 Selection of Test Specimens***	
1 Test blocks for iron castings are, in principle, to be separately cast or side-by-side cast, of the types shown in **Fig. K5.4**, **Fig. K5.5** or **Fig. K5.6**, with a thickness of 25 *mm* used as the standard type. Separately cast or side-by-side test blocks of other dimensions as shown in **Fig. K5.4** or **Fig. K5.6** may be specified depending on the relevant wall thickness of the casting, when specially agreed between the manufacturer, the purchaser and the Society.	**1** Test specimens of iron castings are to be taken from test samples separately cast.	UR W10(Rev.3, Corr.1) / 6.2

DRAFT

Amended-Original Requirements Comparison Table (IACS Unified Requirements Regarding Steel Forgings and Steel Castings)

Amended	Original	Remarks
2 When agreed between the manufacturer and the purchaser, cast-on test blocks may be used. The dimensions of the cast-on test blocks are to be as detailed in **Fig. K5.7**.	(Newly added)	UR W10(Rev.3, Corr.1) / 6.3
Note: (1) Separately cast blocks: Test blocks cast in a separate sand mould under representative manufacturing conditions. (2) Side-by-side (attached to the casting) cast blocks: Test blocks cast in the same mould and attached (or gated) to the casting with a common running system. (3) Cast-on test blocks: Test blocks attached directly to the casting. (4) Relevant wall thickness: Section of the casting, agreed between the manufacturer and the purchaser, to which the determined mechanical properties apply.		
3 (Omitted)	**2** The test samples are to be cast from the same ladle as the one for the castings in the moulds of the same type of material as the one for the moulds for the castings and are not to be stripped from the moulds until the metal temperature is below 500℃. Type and dimensions of test samples are to be deemed appropriate by the Society.	
4 (Omitted)	**3** One piece of tensile test specimen and one set of impact test specimens of iron castings are to be taken from the following test samples respectively.	
(1) At least one test block is to be provided for each iron casting or batch of iron castings.	(Newly added)	UR W10(Rev.3, Corr.1) / 6.4
(2) For large castings where more than one ladle of treated metal is used, additional test blocks are to be provided so as to be representative of each ladle used.	(2) Notwithstanding the requirements in **(1)** above, for large castings where more than one ladle of treated metal is used, one test sample is to be taken from each ladle.	UR W10(Rev.3, Corr.1) / 6.5
(3) As an alternative to **(1)** above, a batch testing procedure may be adopted for iron castings with a	(1) Except where otherwise specially specified by the Society, one lot is iron castings whose weight is less	UR W10(Rev.3, Corr.1) / 6.6

DRAFT

Amended-Original Requirements Comparison Table (IACS Unified Requirements Regarding Steel Forgings and Steel Castings)

Amended	Original	Remarks
fettled mass (castings with feeding and running systems removed) of 1 *tonne* or less. All iron castings in a batch are to be of similar shape and dimensions, cast from the same ladle of treated metal and, where applicable, which have been heat-treated in the same furnace batch. One separately cast or side-by-side cast test block is to be provided for each multiple of 2 *tonnes* of fettled iron castings in the batch. The maximum mass of one batch is not to exceed 2 *tonnes* of fettled iron castings.	than 1 *ton* and consist of the castings poured from a single ladle of metal, provided that they are all of similar type and dimensions, one test sample is to be taken from each one lot. If weight of single iron casting is not less than 2 *tons*, one lot is it, and one test sample is to be taken from each one lot.	
(4) Where separately cast test blocks are used, they are to be cast in moulds made from the same type of material as used for the iron castings and are to be taken towards the end of pouring of the iron castings. The test blocks are not to be stripped from the moulds until the temperature is below 500 *°C*.	(Newly added)	UR W10(Rev.3, Corr.1) / 6.7
(5) Where iron castings are supplied in the heat-treated condition, the test blocks are to be heat treated together with the iron castings which they represent.	(Newly added)	UR W10(Rev.3, Corr.1) / 6.9

DRAFT

Amended	Original	Remarks
Fig. K5.4 Type *A* test blocks (*U*-type) 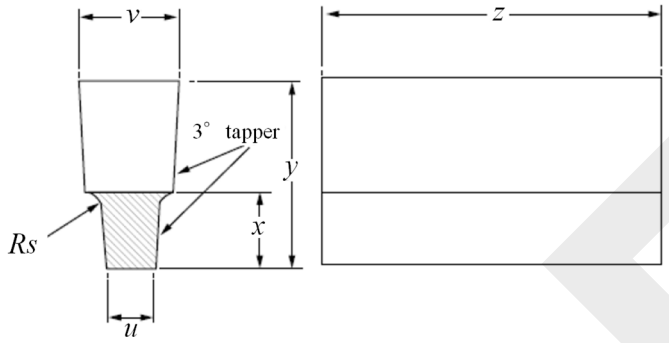 		UR W10(Rev.3, Corr.1) / Fig.1a Moved from the Guidelines.

Dimensions	Standard block	Alternative blocks when specially required		
u (*mm*)	25	12	50	75
v (*mm*)	55	40	90	125
x (*mm*)	40	30	60	65
y (*mm*)	100	80	150	165
z	A function of the test specimen length			
Rs	Approximately 5 *mm*			

DRAFT

Amended	Original	Remarks
Fig. K5.5 Type *B* test blocks (double *U*-type) 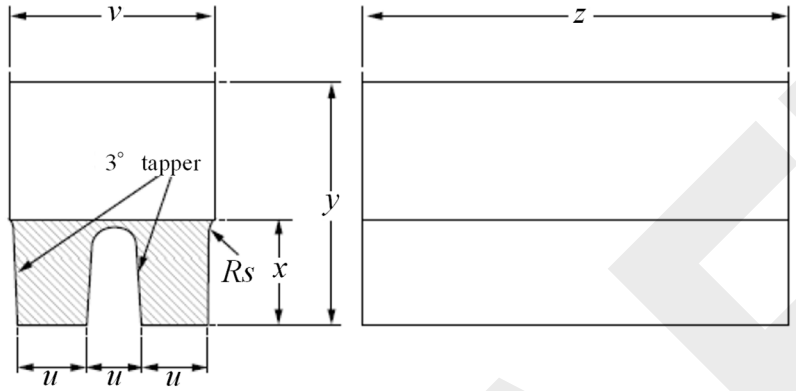 		UR W10(Rev.3, Corr.1) / Fig.1b Moved from the Guidelines.

Dimensions	Standard block
u (*mm*)	25
v (*mm*)	90
x (*mm*)	40
y (*mm*)	100
z	A function of the test specimen length
Rs	Approximately 5 *mm*

DRAFT

Amended	Original	Remarks
Fig. K5.6 Separately cast or side-by-side cast blocks (*Y*-shaped block)		UR W10(Rev.3, Corr.1) / Fig.2 Moved from the Guidelines.

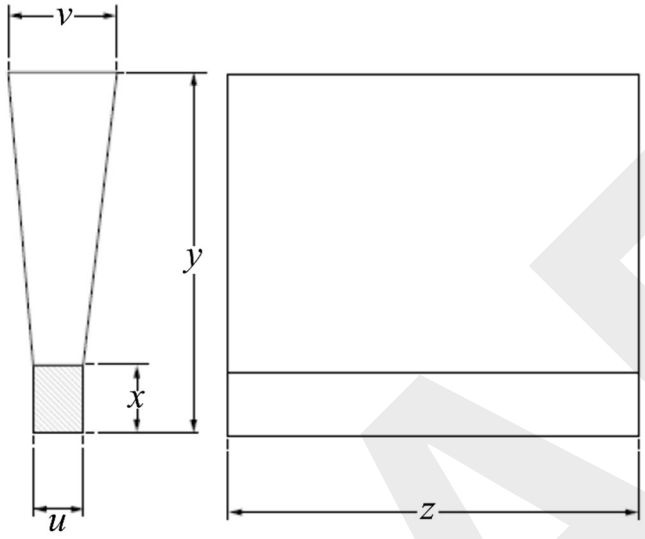

Dimensions	Standard block	Alternative blocks when specially required		
u (*mm*)	25	12.5	50	75
v (*mm*)	55	40	100	125
x (*mm*)	40	25	50	65
y (*mm*)	140	135	150	175
z	A function of the test specimen length			
Thickness of sand mould surrounding test block	40 *mm* min.	40 *mm* min.	80 *mm* min.	80 *mm* min.
Relevant wall thickness (*mm*)	12.5< *t* ≤30	*t* ≤12.5	30< *t* ≤60	60< *t* ≤200

DRAFT

Amended	Original	Remarks

Fig. K5.7 Cast-on test block

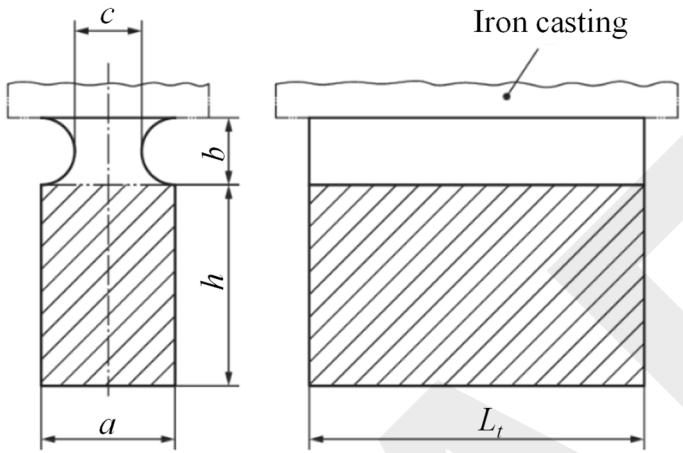

Type	Relevant wall thickness of casting, *t* (*mm*)	*a* (*mm*)	*b* (*mm*) max.	*c* (*mm*) min.	*h* (*mm*)	*Lt* (*mm*)
A	$t \leq 12.5$	15	11	7.5	20 to 30	A function of the test specimen length.
B	$12.5 < t \leq 30$	25	19	12.5	30 to 40	
C	$30 < t \leq 60$	40	30	20	40 to 65	
D	$60 < t \leq 200$	70	52.5	35	65 to 105	

Note:

Thickness of the sand mould surrounding the blocks is to be at least:

(1) Types *A* and *B*: 40 *mm*

(2) Types *C* and *D*: 80 *mm*

(3) If smaller dimensions are agreed between the manufacturer and the purchaser, the following relationship apply;

$b \geq 0.75a$

$c \geq 0.5a$

UR W10(Rev.3, Corr.1) / Fig.3

DRAFT

Amended-Original Requirements Comparison Table (IACS Unified Requirements Regarding Steel Forgings and Steel Castings)

Amended	Original	Remarks
5.6.9 Surface Inspection and Dimension Inspection **1** (Omitted)	**5.6.9 Surface Inspection and Dimension Inspection** Surface inspection and dimension inspection are to be carried out in accordance with the requirements in **5.1.9**.	
2 All iron castings are to be cleaned and adequately prepared for examination; suitable methods include pickling, caustic cleaning, wire brushing, local grinding, shot or sand blasting. The surfaces are not to be hammered, peened or treated in any way which may obscure defects.	(Newly added)	UR W10(Rev.3, Corr.1) / 8.1
3 Before acceptance, all iron castings are to be presented to the Surveyor for visual examination. The visual examination is to include internal surfaces, where applicable. The iron castings are to be free from defects which are detrimental to practical use. The verification of dimensions is the responsibility of the manufacturer.	(Newly added)	UR W10(Rev.3, Corr.1) / 8.2
4 In the event of any iron casting proving defective during subsequent machining or testing, it is to be rejected notwithstanding any previous certification.	(Newly added)	UR W10(Rev.3, Corr.1) / 8.5
5 Cast crankshafts are to be subjected to a magnetic particle inspection. Crack-like indications are not allowed.	(Newly added)	UR W10(Rev.3, Corr.1) / 8.6
5.6.12 Metallographic Examination	**(Newly added)**	
1 A representative sample from each ladle of treated metal is to be prepared for metallographic examination. These samples may conveniently be taken from the tensile test specimens, but alternative arrangements for the provision of the samples may be adopted provided that they are taken from the ladle towards the end of the casting period.		UR W10(Rev.3, Corr.1) / 9.1
2 The method for evaluating the nodularity in spheroidal graphite iron castings is to be in accordance with recognised national or international standards such as *ISO* 945-4:2019. The nodularity of graphite, unless otherwise agreed with the Society, is to meet the requirements of a minimum of 90 % graphite in a dispersed spheroidal or		UR W10(Rev.3, Corr.1) / 9.2

DRAFT

Amended	Original	Remarks
nodular form. For the solid solution strengthened ferritic grades, unless otherwise agreed with the Society, the amount of free cementite is not to exceed 1 %.		
3 The graphite morphology is to be mainly of form V and VI as specified in *ISO* 945-1:2019.		UR W10(Rev.3, Corr.1) / 9.3
4 In case of specific applications, the relative proportion of micro constituents such as ferrites, pearlites or tempered structures in the matrix of the microstructure may be specified subject to agreement between the manufacturer and the purchaser.		UR W10(Rev.3, Corr.1) / 9.4
5.6.13 Marking and Test Certificate	**5.6.12 Marking**	
1 The manufacturer is to adopt a system of identification, which will enable all finished castings to be traced to the original cast. The Surveyor is to be given full facilities for so tracing the castings when required.	Marking of the iron castings is to follow the requirements in **5.1.12**.	UR W10(Rev.3, Corr.1) / 11.1
2 In addition to the requirements in **5.1.12**, iron castings are to be marked with the following **(1)** and **(2)** particulars: (1) Where applicable, test pressure (2) Date of final inspection		UR W10(Rev.3, Corr.1) / 11.2
3 Notwithstanding **-1** above, where small castings are manufactured in large numbers, modified arrangements for identification may be specially agreed with the Society.		UR W10(Rev.3, Corr.1) / 11.3
4 In addition to **1.5.2**, the test certificate for iron castings is to contain the following **(1)** through **(5)** particulars: (1) Description of castings (2) Where applicable, general details of heat treatment including temperatures and holding times (3) Where applicable, test pressure (4) Where applicable, results of non-destructive tests (5) Where applicable, results of the metallographic		UR W10(Rev.3, Corr.1) / 12.1

DRAFT

Amended	Original	Remarks
examination		
5.7 Stainless Steel Propeller Castings	**5.7 Stainless Steel Propeller Castings**	
5.7.2 Kinds The steel propeller castings are classified as specified in **Table K5.12**. Table K5.12 Kinds and Grades (Omitted)	**5.7.2 Kinds** The steel propeller castings are classified as specified in **Table K5.11**. Table K5.11 Kinds and Grades (Omitted)	Correction of table number
5.7.3 Chemical Composition **1** The chemical composition of steel propeller castings is to comply with the requirements specified in **Table K5.13**. **2** Manufacturers are to maintain records of the chemical analyses of the production casts, and these records are to be made available to the Surveyor.	**5.7.3 Chemical Composition** **1** The chemical composition of steel propeller castings is to comply with the requirements specified in **Table K5.12**. **2** Manufacturers are to maintain records of the chemical analyses of the production casts, and these records are to be made available to Surveyor.	Correction of table number
5.7.5 Mechanical Properties Mechanical properties are to comply with the requirements given in **Table K5.14**. Table K5.13 Chemical Composition (Omitted) Table K5.14 Mechanical Properties (Omitted)	**5.7.5 Mechanical Properties** The mechanical properties are to comply with the requirements given in **Table K5.13**. Table K5.12 Chemical Composition (Omitted) Table K5.13 Mechanical Properties (Omitted)	Correction of table number
5.7.10 Repair of Defects* **3** Welding procedures are to be in accordance with **(1)** and **(7)**. Welding procedures and related specifications	**5.7.10 Repair of Defects*** **3** The welding procedures are to be in accordance with **(1)** and **(7)**. The welding procedures and related	

DRAFT

Amended-Original Requirements Comparison Table (IACS Unified Requirements Regarding Steel Forgings and Steel Castings)

Amended	Original	Remarks
approved by the Society are valid for welding work in all shops and sites belonging to the yard under the same facility and control system. ((1) to (4) are omitted.) (5) Welding procedure qualification tests are to be carried out in the presence of the Surveyor as follows: (a) Tests for butt welding i) Test sample The minimum dimensions of the test sample are to be as shown in **Fig. K5.8**. (ii) to vii) are omitted.) (b) (Omitted) (6) (Omitted) (7) The scopes of approval of the welding procedures and related specifications of steel propeller castings are to be in accordance with the following **(a)** through **(h)**, on the condition that the other welding conditions are same. (a) (Omitted) (b) Thickness Range of thickness is to be in accordance with **Table K5.15**. ((c) to (h) are omitted.) Fig. K5.8 Test Sample for Butt Welding Test (*mm*) (Omitted) Table K5.15 Approval Range of Thickness (Omitted)	specifications approved by the Society are valid for welding work in all shops and sites belonging to the yard under the same facility and control system. ((1) to (4) are omitted.) (5) The welding procedure qualification tests are to be carried out in the presence of a Surveyor as follows: (a) Tests for butt welding i) Test sample The minimum dimensions of the test sample are to be as shown in **Fig. K5.3**. (ii) to vii) are omitted.) (b) (Omitted) (6) (Omitted) (7) The scopes of approval of the welding procedures and related specifications of steel propeller castings are to be in accordance with the following **(a)** through **(h)**, on the condition that the other welding conditions are same. (a) (Omitted) (b) Thickness Range of thickness is to be in accordance with **Table K5.16**. ((c) to (h) are omitted.) Fig. K5.3 Test Sample for Butt Welding Test (*mm*) (Omitted) Table K5.16 Approval range of thickness (Omitted)	Correction to figure number Correction of table number

DRAFT

Amended-Original Requirements Comparison Table (IACS Unified Requirements Regarding Steel Forgings and Steel Castings)

Amended	Original	Remarks

Chapter 6 STEEL FORGINGS

6.1 Steel Forgings

6.1.4 Chemical Composition

Table K6.2(a) Chemical Composition of Machinery Steel Forgings

Kind		Chemical Composition (%) (1)									
		C	*Si*	*Mn*	*P*	*S*	*Cr* (2)	*Mo* (2)	*Ni* (2)	*Cu* (2)	Total residual elements
Steel forgings not intended for welding	Carbon steel forgings	0.65 max.	0.45 max.	0.30−1.50	0.035 max.	0.035 max.	0.30 max.	0.15 max.	0.40 max.	0.30 max.	0.85 max.
	Alloy steel forgings	0.45 max.	0.45 max.	0.30−1.00	0.035 max.	0.035 max.	0.40 min. (3)	0.15 min. (3)	0.40 min. (3)	0.30 max.	—
Steel forgings intended for welding	Carbon steel forgings	0.23 max. (4)	0.45 max.	0.30−1.50	0.035 max.	0.035 max.	0.30 max.	0.15 max.	0.40 max.	0.30 max.	0.85 max.
	Alloy steel forgings (5)	0.25 max.	0.45 max.	0.30−1.00	0.035 max.	0.035 max.	0.40 min. (3)	0.15 min. (3)	0.40 min. (3)	0.30 max.	—

Notes:

(1) Where other elements approved by the Society are added, their contents are to be described in the test results.

(2) Elements considered to be residual elements except in cases where a minimum value is indicated. Residual elements are not to be intentionally added to the steel. The contents of residual elements are to be described in the test results.

(3) One or more of the elements is to comply with the minimum content.

(4) Carbon content may be increased in cases where the carbon equivalent (C_{eq}) specified in **1.5.2-2(6)** is less than 0.41 ~~%~~%.

(5) ~~The chemical composition in this table is to be applied unless otherwise deemed appropriate by the Society.~~ For alloy steel forgings intended for welded constructions, the proposed composition requires approval by the Society.

UR W7(Rev.5) / Table 2

Note 5)

DRAFT

Amended-Original Requirements Comparison Table (IACS Unified Requirements Regarding Steel Forgings and Steel Castings)

Amended	Original	Remarks
6.1.6 Mechanical Properties **1** Regardless of welding, the mechanical properties of steel forgings are to be in accordance with **Tables K6.3(a)** and **K6.3(b)**. However, where mechanical properties different from the values in **Tables K6.3(a)** and **K6.3(b)** are to be applied, they are to be as deemed appropriate by the Society.	**6.1.6 Mechanical Properties*** **1** Regardless of welding, the mechanical properties of steel forgings are to be in accordance with **Tables K6.3(a)** and **K6.3(b)**. However, mechanical properties of alloy steel forgings with yield point or proof stress values different from the values in **Tables K6.3(a)** and **K6.3(b)** are to be as deemed appropriate by the Society.	The wording "of alloy steel forgings with yield point or proof stress values" in the proviso (i.e. the part following "However") has been deleted. The original Rules limited modifications to such values; however, other values (e.g. intermediate tensile strength) have also been permitted in practice. This revision aligns the Rules with current practice.

DRAFT

Amended-Original Requirements Comparison Table (IACS Unified Requirements Regarding Steel Forgings and Steel Castings)

Amended	Original	Remarks

Table K6.3(a) Mechanical Properties of Machinery Steel Forgings

UR W7(Rev.5) / Table 4

Kind		Grade [8]	Tensile strength [1] min. (N/mm^2)	Yield point or proof stress min. (N/mm^2)	Elongation ($L = 5.65\sqrt{A}$) min. (%)		Reduction of area min. (%)		Brinell hardness [2] *HBW*	Charpy V-notch impact test [7]		
					L	*T*	*L*	*T*		Test temperature (°*C*)	Minimum average energy (*J*) [3][4] *L*	Minimum average energy (*J*) [3][4] *T*
For machinery [9]	Carbon steel forgings	*KSF*400-*M*	400 ~~min.~~	200 ~~min.~~	26 ~~min.~~	19 ~~min.~~	50 ~~min.~~	35 ~~min.~~	110−150	*AT* [10]	~~27~~18	~~18~~12
		*KSF*440-*M*	440 ~~min.~~	220 ~~min.~~	24 ~~min.~~	18 ~~min.~~	50 ~~min.~~	35 ~~min.~~	125−160			
		*KSF*480-*M*	480 ~~min.~~	240 ~~min.~~	22 ~~min.~~	16 ~~min.~~	45 ~~min.~~	30 ~~min.~~	135−175			
		*KSF*520-*M*	520 ~~min.~~	260 ~~min.~~	21 ~~min.~~	15 ~~min.~~	45 ~~min.~~	30 ~~min.~~	150−185			
		*KSF*560-*M*	560 ~~min.~~	280 ~~min.~~	20 ~~min.~~	14 ~~min.~~	40 ~~min.~~	27 ~~min.~~	160−200			
		*KSF*600-*M*	600 ~~min.~~	300 ~~min.~~	18 ~~min.~~	13 ~~min.~~	40 ~~min.~~	27 ~~min.~~	175−215			
		*KSF*640-*M*	640 ~~min.~~	320 ~~min.~~	17 ~~min.~~	12 ~~min.~~	40 ~~min.~~	27 ~~min.~~	185−230			
		*KSF*680-*M*	680 ~~min.~~	340 ~~min.~~	16 ~~min.~~	12 ~~min.~~	35 ~~min.~~	24 ~~min.~~	200−240			
		*KSF*720-*M*	720 ~~min.~~	360 ~~min.~~	15 ~~min.~~	11 ~~min.~~	35 ~~min.~~	24 ~~min.~~	210−250			
		*KSF*760-*M*	760 ~~min.~~	380 ~~min.~~	14 ~~min.~~	10 ~~min.~~	35 ~~min.~~	24 ~~min.~~	225−265			
	Alloy steel forgings	*KSFA*600-*M*	600 ~~min.~~	360 ~~min.~~	18 ~~min.~~	14 ~~min.~~	50 ~~min.~~	35 ~~min.~~	175−215			
		*KSFA*700-*M*	700 ~~min.~~	420 ~~min.~~	16 ~~min.~~	12 ~~min.~~	45 ~~min.~~	30 ~~min.~~	205−245			
		*KSFA*800-*M*	800 ~~min.~~	480 ~~min.~~	14 ~~min.~~	10 ~~min.~~	40 ~~min.~~	27 ~~min.~~	235−275			
		*KSFA*900-*M*	900 ~~min.~~	630 ~~min.~~	13 ~~min.~~	9 ~~min.~~	40 ~~min.~~	27 ~~min.~~	260−320			
		*KSFA*1000-*M*	1000 ~~min.~~	700 ~~min.~~	12 ~~min.~~	8 ~~min.~~	35 ~~min.~~	24 ~~min.~~	290−365			
		*KSFA*1100-*M*	1100 ~~min.~~	770 ~~min.~~	11 ~~min.~~	7 ~~min.~~	35 ~~min.~~	24 ~~min.~~	320−385			

DRAFT

Amended	Original	Remarks
Notes: (1) For steel forgings whose specified minimum tensile strength is less than 900 *N/mm*^{2}, a tensile strength range of 150 *N/mm*^{2} may additionally be specified. For steel forgings whose specified minimum tensile strength is 900 *N/mm*^{2} or more, a tensile strength range of 200 *N/mm*^{2} may additionally be specified. (2) Hardness values are standard and are given for information purposes only. (3) The letters "*L*" and "*T*" refer to longitudinal and tangential respectively and indicate the direction in which the specimen is to be taken with respect to the product. (4) When the absorbed energy of two or more test specimens among a set of test specimens is less in value than the specified minimum mean absorbed energy or when the absorbed energy of a single test specimens is less in value than 70 *%* of the specified minimum mean absorbed energy, the test is considered to be failed. (5) The requirement for carbon steel forgings is applicable to those annealed, normalised, normalised and tempered, or quench and tempered. (6) The requirement for low alloy steel forgings is applicable to those quenched and tempered. In cases where they are normalised and tempered, their mechanical properties are subject to Society approval. (7) Special consideration may be given to alternative ~~requirements~~ acceptance criteria for the Charpy V-notch impact test (which may be supported by historical and statistical test data), or for alternative test and inspection arrangements, subject to agreement with the Society~~, depending on design and application, and subject to Society approval.~~ (8) For steel forgings complying with **6.1.4-2**, "*W*" is to be suffixed to their respective grade markings. (9) For steel forgings complying with the table, "-*M*" is to be suffixed to their respective grade markings (e.g.~~:~~ *KSF*400-*M* and *KSFA*600*W*-*M*) (10) *AT* refers to the ambient temperature specified in *ISO* 148-1:2016 (i.e. 23 °*C*±5 °*C*).		

DRAFT

Amended-Original Requirements Comparison Table (IACS Unified Requirements Regarding Steel Forgings and Steel Castings)

Amended	Original	Remarks

Table K6.3(b) Mechanical Properties of Hull Steel Forgings

Kind		Grade [7]	Tensile strength [1] min. (N/mm^2)	Yield point or proof stress min. (N/mm^2)	Elongation ($L = 5.65\sqrt{A}$) min. (%)		Reduction of area min. (%)		Charpy V-notch impact test [6]		
					L	*T*	*L*	*T*	Test temperature (°C)	Minimum average energy (*J*) [2][3]	
										L	*T*
For hull [8]	Carbon steel forgings	*KSF*400-*H*	400 ~~min.~~	200 ~~min.~~	26 ~~min.~~	19 ~~min.~~	50 ~~min.~~	35 ~~min.~~	0	27	18
		*KSF*440-*H*	440 ~~min.~~	220 ~~min.~~	24 ~~min.~~	18 ~~min.~~	50 ~~min.~~	35 ~~min.~~			
		*KSF*480-*H*	480 ~~min.~~	240 ~~min.~~	22 ~~min.~~	16 ~~min.~~	45 ~~min.~~	30 ~~min.~~			
		*KSF*520-*H*	520 ~~min.~~	260 ~~min.~~	21 ~~min.~~	15 ~~min.~~	45 ~~min.~~	30 ~~min.~~			
		*KSF*560-*H*	560 ~~min.~~	280 ~~min.~~	20 ~~min.~~	14 ~~min.~~	40 ~~min.~~	27 ~~min.~~			
		*KSF*600-*H*	600 ~~min.~~	300 ~~min.~~	18 ~~min.~~	13 ~~min.~~	40 ~~min.~~	27 ~~min.~~			
	Alloy steel forgings	*KSFA*550-*H*	550 ~~min.~~	350 ~~min.~~	20 ~~min.~~	14 ~~min.~~	50 ~~min.~~	35 ~~min.~~			
		*KSFA*600-*H*	600 ~~min.~~	400 ~~min.~~	18 ~~min.~~	13 ~~min.~~	50 ~~min.~~	35 ~~min.~~			
		*KSFA*650-*H*	650 ~~min.~~	450 ~~min.~~	17 ~~min.~~	12 ~~min.~~	50 ~~min.~~	35 ~~min.~~			

UR W7(Rev.5) / Table 3

In W7 (Rev.5) / Table 3, the “minimum average energy” values are specified as L: 18 (J) and T: 12 (J).
However, discussions have recently been initiated within IACS on the possibility of reverting these threshold values to the original levels. Accordingly, the current thresholds are maintained at present.

DRAFT

Amended	Original	Remarks
Notes: (1) For steel forgings whose specified minimum tensile strength is less than 600 N/mm^2, a tensile strength range of 120 N/mm^2 may additionally be specified. For steel forgings whose specified minimum tensile strength is 600 N/mm^2 or more, a tensile strength range of 150 N/mm^2 may additionally be specified. (2) The letters "*L*" and "*T*" refer to longitudinal and tangential respectively and indicate the direction in which the specimen is taken with respect to the product. (3) When the absorbed energy of two or more test specimens among a set of test specimens is less in value than the specified minimum mean absorbed energy or when the absorbed energy of a single test specimens is less in value than 70 % of the specified minimum mean absorbed energy, the test is considered to be failed. (4) The requirement for carbon steel forgings is applicable to those annealed, normalised, normalised and tempered, or quench and tempered. (5) The requirement for low alloy steel forgings is applicable to those quenched and tempered. In cases where they are normalised and tempered, their mechanical properties are subject to Society approval. (6) Special consideration may be given to alternative ~~requirements~~ acceptance criteria for the Charpy V-notch impact test (which may be supported by historical and statistical test data), or for alternative test and inspection arrangements, subject to agreement with the Society.~~, depending on design and application, and subject to Society approval.~~ (7) For steel forgings complying with **6.1.4-2**, "*W*" is to be suffixed to their respective grade markings. (8) For steel forgings complying with the table, "-*H*" is to be suffixed to their respective grade markings (e.g. *KSF*400-*H* and *KSFA*600*W*-*H*)		

DRAFT

Amended-Original Requirements Comparison Table (IACS Unified Requirements Regarding Steel Forgings and Steel Castings)

Amended	Original	Remarks
6.1.8 Selection of Test Specimens	**6.1.8 Selection of Test Specimens**	
1 (Omitted)	**1** Unless otherwise specially specified, the test specimens for steel forgings are, after final heat treatment, to be taken longitudinal from a part having a sectional area not less than that of the body of forging. But they are to be taken tangential where deemed necessary according to the form of the forgings.	
2 (Omitted)	**2** The test specimens are not to be separated from the body before the final heat treatment has been completed. In the case of stamp forging or other case of forging requiring the surface hardening process, the test specimens may be separated at a proper stage before the final heat treatment providing that such is approved by the Surveyor.	
3 Unless otherwise agreed, the longitudinal axis of test specimens is to be positioned as follows:	**3** Unless otherwise agreed, the longitudinal axis of test specimens is to be positioned as follows:	
(1) For forgings having a thicknesses (t) or diameter (D) up to maximum 50 *mm*, the longitudinal axis of the test specimen is to be located at a distance of t/2 or D/2 below the heat treated surface.	(1) For thicknesses (t) or diameters (D) of 50 *mm* or less, the axis is to be at a distance of t/2 or D/2 below the heat treated surface.	UR W7(Rev.5) / 6.4 a)
(2) For forgings (other than ring and disc forgings) having a thicknesses (t) or diameter (D) greater than 50 *mm*, the longitudinal axis of the test specimen is to be located at a distance t/4 or D/4 (mid-radius) or 80 *mm*, whichever is less, below any heat treated surface as shown in **Fig. K6.1**.	(2) For thicknesses (t) or diameters (D) of greater than 50 *mm*, the axis is to be at t/4 or D/4 (mid-radius) or 80 *mm*, whichever is less, below any heat treated surface as shown in **Fig. K6.1**.	UR W7(Rev.5) / 6.4 b)
(3) For ring and disc forgings for which the thickness is 25 *mm* or less, tangential test specimens are to be taken at a distance of t/2 below the heat treated surface.	(3) For ring and disc forgings for which the thickness is 25 *mm* or less, tangential test specimens are to be taken at a distance of t/2 below the heat treated surface in both the vertical and horizontal directions.	UR W7(Rev.5) / 6.4 c)
(4) For ring and disc forgings for which the thickness is greater than 25 *mm*, tangential test specimens are to be taken at least 12.5 *mm* below any heat treated	(4) For ring and disc forgings for which the thickness is greater than 25 *mm*, tangential test specimens are to be taken at a distance of 12.5 *mm* below the heat	UR W7(Rev.5) / 6.4 c)

DRAFT

Amended-Original Requirements Comparison Table (IACS Unified Requirements Regarding Steel Forgings and Steel Castings)

Amended	Original	Remarks
surface as shown in **Fig. K6.2**.	treated surface in both the vertical and horizontal direction. No part of the test specimen is to be closer than 12.5 *mm* to any heat treated surface, as shown in **Fig. K6.1**.	
4 Notwithstanding **-3** above, where manufacturers demonstrate that a proposed testing location or orientation is more representative of the required mechanical properties of a component, this location or orientation may be allowed by the Society. In such cases, the heat treatment process, the proposed testing location or orientation, and technical justification are to be submitted to the Society for approval.	**4** Notwithstanding **-3** above, where manufacturers demonstrate that a proposed testing location or orientation is more representative of the required mechanical properties of a component, this location or orientation may allowed by the Society. In such cases, the heat treatment process, the proposed testing location or orientation, and technical justification are to be submitted to the Society for approval.	
5 The number of test specimens is to be in accordance with the following **(1)** through **(4)**. In such cases, "one set of specimens" means one tensile test specimen and one set of three impact test specimens: (1) (Omitted) (2) For steel forgings more than 4 *tonnes* in mass and 3 *m* or less in length or for steel forgings 500 *kg* or greater but 4 *tonnes* or less in mass, one set of test specimens is to be taken from one end of the forging in a longitudinal direction; however, the alternative directions or positions shown in **Fig. K6.3** thorough **Fig. K6.5** may be used at manufacturer discretion. ((3) and (4) are omitted.)	**5** The number of test specimens is to be in accordance with the following **(1)** through **(4)**. In such cases, "one set of specimens" means one tensile test specimen and one set of three impact test specimens: (1) (Omitted) (2) For steel forgings more than 4 *tons* in mass and 3 *m* or less in length or for steel forgings 500 *kg* or greater but 4 *tons* or less in mass, one set of test specimens is to be taken from one end of the forging in a longitudinal direction; however, the alternative directions or positions shown in **Fig. K6.2** thorough **Fig. K6.4** may be used at manufacturer discretion. ((3) and (4) are omitted.)	Correction to figure number
6 (Omitted)	**6** The steel forgings heat treated with continuous heat treatment furnace, without changing the heat treatment conditions are to be considered that they have been simultaneously heat treated.	

DRAFT

Amended	Original	Remarks
Fig. K6.1 Test Specimen Position Other than Ring and Disc Forgings (for Thickness *t* or Diameter *D* greater than 50 *mm*)		UR W7(Rev.5) / Fig.1

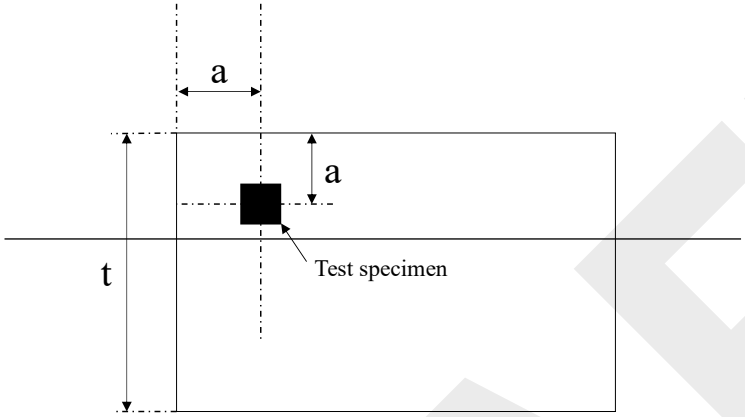

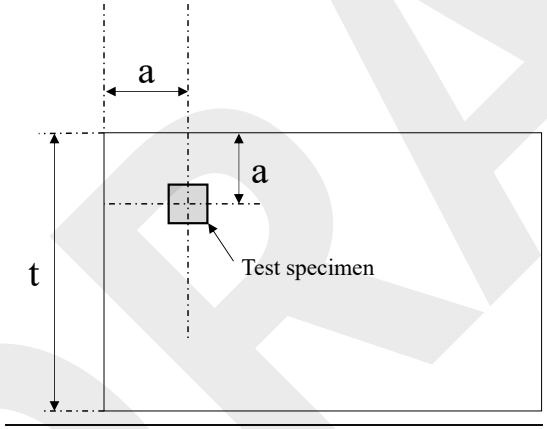

Note:
"*t*" is the thickness of the steel forging, and "*a*" is the distance from the test specimen axis to the heat treated surface based on **6.1.8-3(2)** ~~and (4)~~.

DRAFT

Amended	Original	Remarks
Fig. K6.2 Test Specimen Position for Ring and Disc Forgings (for Thickness *t* greater than 25 *mm*) 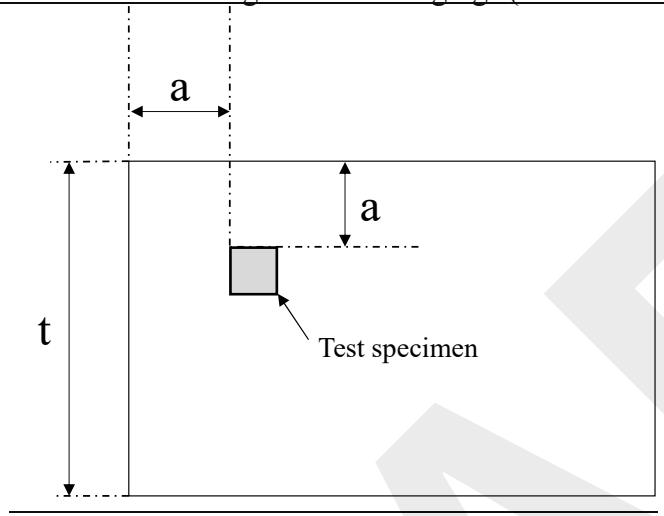 Note: "*t*" is the thickness of the steel forging, and "*a*" is the distance from the test specimen to the heat treated surface based on **6.1.8-3(4)**.		UR W7(Rev.5) / Fig.2
Fig. K6.3 Alternative Directions or Position of the Test Specimen for Plain Shaft (Omitted)	Fig. K6.2 Alternative Directions or Position of the Test Specimen for Plain Shaft (Omitted)	Correction to figure number
Fig. K6.4 Alternative Directions or Positions for the Test Specimens for Flanged Shafts (Omitted)	Fig. K6.3 Alternative Directions or Positions for the Test Specimens for Flanged Shafts (Omitted)	Correction to figure number
Fig. K6.5 Alternative Directions or Positions for the Test Specimen for Flanged Shafts with Collars (Omitted)	Fig. K6.4 Alternative Directions or Positions for the Test Specimen for Flanged Shafts with Collars (Omitted)	Correction to figure number
6.1.12 Marking The marking of steel forgings is to be in accordance with the requirements in **1.5.1**. For steel forgings to which	**6.1.12 Marking** Steel forgings which have satisfactorily complied with the required tests are to be marked with the	

DRAFT

Amended	Original	Remarks
the requirements given in **6.1.6-1** and **-2** are applied, the following marks are to be suffixed to the grade mark. (e.g. *KSFA*600-*M*-*YP*350*M*)	identification mark in accordance with the requirements in **1.5.1**. For steel forgings to which the requirements given in **6.1.6-2** have been applied, the value corresponding to the required tensile strength employed is to be used to the grade mark. (*ex*. Where the required tensile strength employed is 460 N/mm^2, *"KSF*47" is to be indicated)	
(1) Where the yield point (or proof stress) is modified: "-*YP*<modified value>*M*" (2) Where the tensile strength is modified: "-*TS*<modified value>*M*"		
6.1.14 Additional Requirements for Turbine Rotors **1** Test specimens for turbine rotors are to be taken in accordance with the following **(1)** and **(2)**: (1) Where turbine rotors are greater than 3 *tonnes* in mass, one set of longitudinal test specimens is to be taken from each end of the shaft portion, and one set of tangential test specimens is to be taken in the tangential direction from the body portion (*See* **Fig. K6.6**). ((2) is omitted.)	**6.1.14 Additional Requirements for Turbine Rotors** **1** Test specimens for turbine rotors are to be taken in accordance with the following **(1)** and **(2)**: (1) Where turbine rotors are greater than 3 *tons* in mass, one set of longitudinal test specimens is to be taken from each end of the shaft portion and one set of tangential test specimens is to be taken in the tangential direction from the body portion (*See* **Fig. K6.5**). ((2) is omitted.)	Correction to figure number
2 For each turbine disc, one set of tangential test specimens in the tangential direction is to be taken from the boss portion (*See* **Fig. K6.7**).	**2** For each turbine disc, one set of tangential test specimens in the tangential direction is to be taken from the boss portion (*See* **Fig. K6.6**).	Correction to figure number
3 (Omitted)	**3** (Omitted)	
6.1.15 Additional Requirements for Reduction Gears* **1** Pinions intended for reduction gears are to conform to the following **(1)** through **(4)**: (1) Where the finished diameter over the portion where teeth will be cut does not exceed 200 *mm*, one set of longitudinal test specimens is to be taken from one end of the journal (*See* **Fig. K6.8**).	**6.1.15 Additional Requirements for Reduction Gears*** **1** Pinions intended for reduction gears are to conform to the following **(1)** through **(4)**: (1) Where the finished diameter over the portion where teeth will be cut does not exceed 200 *mm*, one set of longitudinal test specimens is to be taken from one end of the journal (*See* **Fig. K6.7**).	Correction to figure number

DRAFT

Amended-Original Requirements Comparison Table (IACS Unified Requirements Regarding Steel Forgings and Steel Castings)

Amended	Original	Remarks
(2) (a) Where the finished diameter is greater than 200 *mm* and the length of one piece is greater than 1.25 *m*, one set of tangential test specimens is to be taken from each end of the adjacent portion where the teeth will be cut (*See* **(A)** in **Fig. K6.9**). In the case of pinions where the diameter of journal precludes the preparation of test specimens from this portion, tangential test specimens may be taken from the ends of the journal (*See* **(B)** in **Fig. K6.9**). Where the finished journal diameter does not exceed 200 *mm*, one set of longitudinal test specimens may be taken from each end of the journals (*See* **(C)** in **Fig. K6.9**). (b) (Omitted) (3) Where the pinions are so designed that the tooth body is inserted in the shaft, one set of tangential test specimens in the tangential direction is to be taken from the ends of the tooth body. Where the finished length is greater than 1.25 *m*, one set of test specimens is to be taken from each end (*See* **Fig. K6.10**). (4) (Omitted)	(2) (a) Where the finished diameter is greater than 200 *mm* and the length of one piece is greater than 1.25 *m*, one set of tangential test specimens is to be taken from each end of the adjacent portion where the teeth will be cut (*See* **(A)** in **Fig. K6.8**). In the case of pinions where the diameter of journal precludes the preparation of test specimens from this portion, tangential test specimens may be taken from the ends of the journal (*See* **(B)** in **Fig. K6.8**). Where the finished journal diameter does not exceed 200 *mm*, one set of longitudinal test specimens may be taken from each end of the journals (*See* **(C)** in **Fig. K6.8**). (b) (Omitted) (3) Where the pinions are so designed that the tooth body is inserted in the shaft, one set of tangential test specimens in the tangential direction is to be taken from the ends of the tooth body. Where the finished length is greater than 1.25 *m*, one set of test specimens is to be taken from each end. (4) (Omitted)	Correction to figure number Correction to figure number Correction to figure number Addition to figure number
2 Rims intended for reduction gears are to conform to the following **(1)** through **(3)**: (1) Where the finished diameter of a rim exceeds 2.5 *m* or the mass exceeds 3 *tonnes*, one set of tangential test specimens is to be taken from each end of the rim at diametrically opposite positions (*See* **Fig. K6.11**). In cases where the finished width of the rim does not exceed 1 *m*, one set each test specimens may be taken from either end of the rim at	**2** Rims intended for reduction gears are to conform to the following **(1)** through **(3)**: (1) Where the finished diameter of a rim exceeds 2.5 *m* or the mass exceeds 3 *tons*, one set of tangential test specimens is to be taken from each end of the rim at diametrically opposite positions (*See* **Fig. K6.10**). In cases where the finished width of the rim does not exceed 1 *m*, one set each test specimens may be taken from either end of the rim at diametrically	Correction to figure number

DRAFT

Amended	Original	Remarks
diametrically opposite positions. The mechanical properties are to conform to the requirements applicable to cases where test specimens are taken in the direction parallel to the forging direction. ((2) and (3) are omitted.)	opposite positions. The mechanical properties are to conform to the requirements applicable to cases where test specimens are taken in the direction parallel to the forging direction. ((2) and (3) are omitted.)	
3 For gear wheels, one set of tests is to be taken from each forging in a tangential direction (*See* **Fig. K6.12**). (-4 and -5 are omitted.)	**3** For gear wheels, one set of tests is to be taken from each forging in a tangential direction (*See* **Fig. K6.11**). (-4 and -5 are omitted.)	Correction to figure number
6.1.16 Forged Rings (such as slewing rings) Test specimens for forged rings (such as slewing rings) are to be taken in accordance with the following **(1)** and **(2)** (*See* **Fig. K6.13**): ((1) and (2) are omitted.)	**6.1.16 Forged Rings (such as slewing rings)** Test specimens for forged rings (such as slewing rings) are to be taken in accordance with the following **(1)** and **(2)** (*See* **Fig. K6.12**): ((1) and (2) are omitted.)	Correction to figure number
Fig. K6.6 Selection of Test Specimens for Turbine Rotors (Omitted)	Fig. K6.5 Selection of Test Specimens for Turbine Rotors (Omitted)	
Fig. K6.7 Selection of Test Specimens for Turbine Discs (Omitted)	Fig. K6.6 Selection of Test Specimens for Turbine Discs (Omitted)	
Fig. K6.8 Selection of Test Specimens for Pinion Not Exceeding 200 *mm* in Finished Diameter (Omitted)	Fig. K6.7 Selection of Test Specimens for Pinion Not Exceeding 200 *mm* in Finished Diameter (Omitted)	
Fig. K6.9 Selection of Test Specimens for Pinion Greater Than 200 *mm* in Finished Diameter (Omitted)	Fig. K6.8 Selection of Test Specimens for Pinion Greater Than 200 *mm* in Finished Diameter (Omitted)	
Fig. K6.10 Selection of Test Specimens for Pinion Sleeves (Omitted)	Fig. K6.9 Selection of Test Specimens for Pinion Sleeves (Omitted)	

DRAFT

Amended-Original Requirements Comparison Table (IACS Unified Requirements Regarding Steel Forgings and Steel Castings)

Amended	Original	Remarks
Fig. K6.11 Selection of Test Specimens for Rim (Omitted) Fig. K6.12 Selection of Test Specimens for Gear Wheel (Omitted) Fig. K6.13 Selection of Test Specimens for Forged Rings (Omitted)	Fig. K6.10 Selection of Test Specimens for Rim (Omitted) Fig. K6.11 Selection of Test Specimens for Gear Wheel (Omitted) Fig. K6.12 Selection of Test Specimens for Forged Rings (Omitted)	

DRAFT

Amended-Original Requirements Comparison Table (IACS Unified Requirements Regarding Steel Forgings and Steel Castings)

Amended	Original	Remarks
GUIDANCE FOR THE SURVEY AND CONSTRUCTION OF STEEL SHIPS **Part K MATERIALS** **K5 CASTINGS** **K5.6 Spheroidal or Nodular Graphite Iron Castings** **(Deleted)**	**GUIDANCE FOR THE SURVEY AND CONSTRUCTION OF STEEL SHIPS** **Part K MATERIALS** **K5 CASTINGS** **K5.6 Spheroidal or Nodular Graphite Iron Castings** **K5.6.8 Selection of Test Specimens** The shapes and dimensions deemed appropriate by the Society specified in **5.6.8-2, Part K of the Rules** means those shown in **Fig. K5.6.8-1** to **Fig. K5.6.8-3**. The thickness *u* at the portion from where test specimens are to be taken (shown by hatching in the figures) is to be 25 *mm* in general. Where the thickness is other than 25 *mm*, either the size specified in **Fig. K5.6.8-1** or **Fig. K5.6.8-3** is to be selected.	Moved to 5.6.8 of the Rules.

DRAFT

Amended-Original Requirements Comparison Table (IACS Unified Requirements Regarding Steel Forgings and Steel Castings)

<table>
<tr><th>Amended</th><th>Original</th><th>Remarks</th></tr>
<tr><td>(Deleted)</td><td>

Fig. K5.6.8-1. Test Sample A

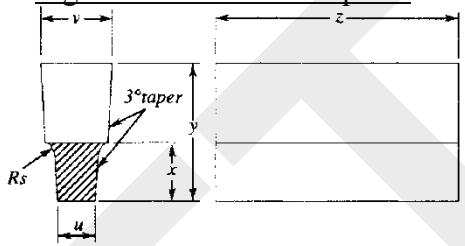

<table>
<tr><th rowspan="2"></th><th rowspan="2">Standard size</th><th colspan="3">Sizes other than standard</th></tr>
<tr><th>(1)</th><th>(2)</th><th>(3)</th></tr>
<tr><td>u (mm)</td><td>25</td><td>12</td><td>50</td><td>75</td></tr>
<tr><td>v (mm)</td><td>55</td><td>40</td><td>90</td><td>125</td></tr>
<tr><td>x (mm)</td><td>40</td><td>30</td><td>60</td><td>65</td></tr>
<tr><td>y (mm)</td><td>100</td><td>80</td><td>150</td><td>165</td></tr>
<tr><td>z</td><td colspan="4">Length adjusted to testing machine</td></tr>
<tr><td>Rs</td><td colspan="4">Approx. 5mm</td></tr>
</table>

</td><td>Moved to 5.6.8 of the Rules.</td></tr>
<tr><td>(Deleted)</td><td>

Fig. K5.6.8-2 Test Sample B (Unit: mm)

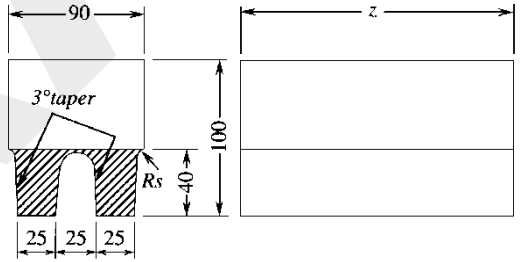

Notes:

Z : Length adjusted to testing machine

Rs : Approximately 5 mm

</td><td></td></tr>
</table>

DRAFT

<table>
<tr><th>Amended</th><th>Original</th><th>Remarks</th></tr>
<tr><td>(Deleted)</td><td>Fig. K5.6.8-3 Test Sample C
 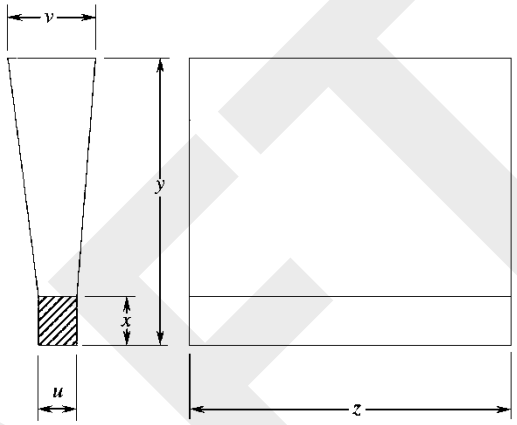

<table>
<tr><td></td><td rowspan="2">Standard size</td><td colspan="3">Sizes other than standard</td></tr>
<tr><td>(1)</td><td>(2)</td><td>(3)</td></tr>
<tr><td>u (mm)</td><td>25</td><td>12</td><td>50</td><td>75</td></tr>
<tr><td>v (mm)</td><td>55</td><td>40</td><td>100</td><td>125</td></tr>
<tr><td>x (mm)</td><td>40</td><td>25</td><td>50</td><td>65</td></tr>
<tr><td>y (mm)</td><td>140</td><td>135</td><td>150</td><td>175</td></tr>
<tr><td>z</td><td colspan="4">Length adjusted to testing machine</td></tr>
</table>
K6 STEEL FORGINGS

K6.1 Steel Forgings</td><td>Moved to 5.6.8 of the Rules.</td></tr>
<tr><td>(Deleted)</td><td><u>K6.1.6 Mechanical Properties</u>
<u>“Deemed appropriate by the Society” specified in 6.1.6-1, Part K of the Rules is applied as follows:</u></td><td>Moved to 6.1.12 of the Rules.</td></tr>
</table>

DRAFT

Amended	Original	Remarks
	Where the value of yield point or proof stress of alloy steel forgings in mechanical properties is altered, the value of yield point or proof stress and "*M*" is to be suffixed to the markings. (for example, *KSFA*600-*M*-410*M* or *KSFA*600-*H*-410*M*)	

EFFECTIVE DATE AND APPLICATION

1. The effective date of the amendments is 1 January 2027.

2. Notwithstanding the amendments, the current requirements apply to ships for which the date of contract for construction* is before the effective date.

* "contract for construction" is defined in the latest version of IACS Procedural Requirement (PR) No.29.

IACS PR No.29 (Rev.0, July 2009)

1. The date of "contract for construction" of a vessel is the date on which the contract to build the vessel is signed between the prospective owner and the shipbuilder. This date and the construction numbers (i.e. hull numbers) of all the vessels included in the contract are to be declared to the classification society by the party applying for the assignment of class to a newbuilding.

2. The date of "contract for construction" of a series of vessels, including specified optional vessels for which the option is ultimately exercised, is the date on which the contract to build the series is signed between the prospective owner and the shipbuilder.

For the purpose of this Procedural Requirement, vessels built under a single contract for construction are considered a "series of vessels" if they are built to the same approved plans for classification purposes. However, vessels within a series may have design alterations from the original design provided:

(1) such alterations do not affect matters related to classification, or

(2) If the alterations are subject to classification requirements, these alterations are to comply with the classification requirements in effect on the date on which the alterations are contracted between the prospective owner and the shipbuilder or, in the absence of the alteration contract, comply with the classification requirements in effect on the date on which the alterations are submitted to the Society for approval.

The optional vessels will be considered part of the same series of vessels if the option is exercised not later than 1 year after the contract to build the series was signed.

3. If a contract for construction is later amended to include additional vessels or additional options, the date of "contract for construction" for such vessels is the date on which the amendment to the contract, is signed between the prospective owner and the shipbuilder. The amendment to the contract is to be considered as a "new contract" to which **1.** and **2.** above apply.

4. If a contract for construction is amended to change the ship type, the date of "contract for construction" of this modified vessel, or vessels, is the date on which revised contract or new contract is signed between the Owner, or Owners, and the shipbuilder.

Note:
This Procedural Requirement applies from 1 July 2009.

DRAFT