Contents

RULES FOR THE SURVEY AND CONSTRUCTION OF STEEL SHIPS 5
Part C HULL CONSTRUCTION AND EQUIPMENT 5
Part 1 GENERAL HULL REQUIREMENTS 5
Chapter 1 GENERAL 5
1.1 General 5
1.2 Application of the Rules 7
1.3 Principles for Strength Assessment 10
1.4 Symbols and Definitions 13
1.5 Plans and Documents To Be Submitted 35
Annex 1.1 SPECIAL REQUIREMENTS FOR RESTRICTED SERVICE 37
An1 General 37
Chapter 2 GENERAL ARRANGEMENT DESIGN 40
2.1 General 40
2.2 Subdivision Arrangement 40
2.3 Damage Stability 48
2.4 Structural Arrangements 62
Chapter 3 STRUCTURAL DESIGN PRINCIPLES 65
3.1 General 65
3.2 Materials 65
3.3 Net Scantling Approach 80
3.4 Structural Detail Principles 90
3.5 Minimum Requirements 93
3.6 Idealisation of Stiffeners and Primary Supporting Members 98
3.7 Load Calculation Point 109
3.8 Loading Manual and Loading Instruments 114
Annex 3.2 GUIDANCE FOR THE USE OF FIBRE-REINFORCED PLASTIC (*FRP*) 117
An1 General 117
An2 Requirements for *FRP* Products 117
Annex 3.8 ITEMS TO BE INCLUDED IN LOADING MANUAL 120
An1 General 120
Chapter 4 LOADS 124
4.1 General 124
4.2 Ship Motions and Accelerations 127
4.3 Loads to be Considered in Longitudinal Strength 133
4.4 Loads to be Considered in Local Strength 139
4.5 Loads to be Considered in Strength of Primary Supporting Structures 153
4.6 Loads to be Considered in Strength Assessment by Cargo Hold Analysis 154
4.7 Loads to be Considered in Fatigue 178
4.8 Loads to be Considered in Additional Structural Requirements 190

4.9 Loads to be Considered in Structures other than Cargo Region 206
4.10 Loads to be Considered in Equipment 208
Annex 4.3 GUIDELINE FOR THE ASSESSMENT OF LONGITUDINAL STRENGTH RELATING TO BALLASTING/DEBALLASTING 216
An1. General 216
An2. Guidelines for the Assessment of Longitudinal Strength 216
Chapter 5 LONGITUDINAL STRENGTH 234
5.1 General 234
5.2 Yield Strength 235
5.3 Buckling Strength 243
5.4 Hull Girder Ultimate Strength 244
5.5 Torsional Strength 246
Annex 5.1 EXTENT OF HIGH TENSILE STEEL 247
An1 Extent of High Tensile Steel Use 247
Annex 5.2 CALCULATION OF SHEAR FLOW 249
An1. General 249
An2. Determinate Shear Flow 249
An3. Indeterminate Shear Flow 250
An4. Computation of Sectional Properties 251
Annex 5.3 BUCKLING STRENGTH ASSESSMENT BASED ON LONGITUDINAL STRENGTH (UR S11) 252
An1 General 252
An2 Buckling Strength of Plates 252
An3 Buckling Stress of Stiffeners 256
Annex 5.4 HULL GIRDER ULTIMATE STRENGTH 258
Symbols 258
An1. General 258
An2. Incremental-iterative Method 259
An3. Alternative Methods 268
Chapter 6 LOCAL STRENGTH 270
6.1 General 270
6.2 Design Load Scenarios and Loads of the Ship to Be Assessed 271
6.3 Plates 273
6.4 Stiffeners 277
Chapter 7 STRENGTH OF PRIMARY SUPPORTING STRUCTURES 287
7.1 General 288
7.2 Simple Girders 290
7.3 Double Hull Structures 309
7.4 Pillars, Struts, Etc. 326
Chapter 8 STRENGTH ASSESSMENT BY CARGO HOLD ANALYSIS 327
8.1 General 327
8.2 Evaluation Area and Members to be Assessed 329
8.3 Structural Model 330

8.4 Considerations for Corrosion 333
8.5 Boundary Conditions and Loads Conditions 334
8.6 Strength Assessment 334
Annex 8.6 BUCKLING STRENGTH ASSESSMENT BASED ON CARGO HOLD ANALYSIS 338
An1 General 338
An2. Buckling Strength Assessment Methods for Different Types of Structures 339
An3. Idealization for Buckling Strength Assessments 348
An4. Alternative Methods 349
Annex 8.6A STRENGTH ASSESSMENT CONSIDERING EFFECT OF SURROUNDING STRUCTURES 350
An1. General 350
An2. Strength Assessment Method Considering the Effect of the Surrounding Structures 350
Chapter 9 FATIGUE 353
9.1 General 353
9.2 Hot Spots To Be Assessed 356
9.3 Simplified Stress Analysis 375
9.4 Finite Element Analysis 392
9.5 Fatigue Strength Assessment 408
9.6 Detail Design Standard 415
9.7 Weld Root Fatigue Strength Assessment 431
Chapter 10 ADDITIONAL STRUCTURAL REQUIREMENTS 435
10.1 General 435
10.2 Bottom Structure 435
10.3 Side Structure 437
10.4 Deck Structure 438
10.5 Bulkhead Structure 443
10.6 Strengthened Bottom Forward 448
10.7 Structural Strength against Bow Impact Pressure 453
10.8 Connections of Ends of Girders and Stiffeners 461
10.9 Tank Structures for Sloshing 465
Chapter 11 STRUCTURES OUTSIDE CARGO REGION 470
11.1 General 470
11.2 Bow Construction 471
11.3 Superstructures and Deckhouses 474
11.4 Machinery Spaces 477
11.5 Stern Construction 478
Chapter 12 WELDING 485
12.1 General 485
12.2 Welded joints 485
12.3 Workmanship 494
Chapter 13 RUDDERS 495
13.1 General 495
13.2 Rudders 495

Chapter 14 EQUIPMENT 513
14.1 General 513
14.2 Ship Identification Number 514
14.3 Anchors and Chain Cables 514
14.4 Towing and Mooring Arrangement 518
14.5 Equipment Numbers and Emergency Towing Arrangements 530
14.6 Hatch Cover 535
14.7 Small Hatchway 550
14.8 Bulwarks and Guardrails 554
14.9 Freeing Arrangements 556
14.10 Doors 559
14.11 Side Scuttles and Rectangular Windows 572
14.12 Ventilators 575
14.13 Gangways 578
14.14 Means of Embarkation and Disembarkation 581
14.15 Void 582
14.16 Means of Access 582
Annex14.6 BUCKLING STRENGTH ASSESSMENT OF SHIP STRUCTURAL ELEMENTS 599
An1. Application and Definitions 599
An2. Slenderness Requirements 603
An3. Buckling Requirements for Hull Girder 604
An4. Buckling Requirements for Direct Strength Analysis of Hatch Covers 607
An5. Buckling Capacity 611
Appendix 14.6 STRESS BASED REFERENCE STRESSES 631
Annex 14.16 GUIDANCE FOR DECISION OF ALTERNATIVE MEANS OF ACCESS 634
An1 General 634
An2 Alternative Means of Access 635

RULES FOR THE SURVEY AND CONSTRUCTION OF STEEL SHIPS

Part C HULL CONSTRUCTION AND EQUIPMENT

Part 1 GENERAL HULL REQUIREMENTS

Chapter 1 GENERAL

1.1 General

1.1.1 Overview

1.1.1.1

This Chapter specifies the general requirements for **Part C** in **Table 1.1.1-1**.

Table 1.1.1-1 Overview of Chapter 1

Section	Title	Overview
1.1	General	Requirements for the application of **Part C** and the general principles for its application
1.2	Application of Rule	Requirements for the composition of **Part C** and the application of individual requirements
1.3	Principles for Strength Assessment	Requirements for the principles for strength assessment in application of **Part C**
1.4	Symbols and Definitions	Requirements for the symbols and definitions used herein
1.5	Plans and Other Documents to Be Submitted	Requirements for the plans and other documents to be submitted
Annex 1.1	Special Requirements for Restricted Service	Special requirements for ships to be classed for restricted service

1.1.2 Application

1.1.2.1 General

1 The requirements in **Part C** apply to ships constructed of welded steel structures, composed of stiffened plate panels, having a length L (as defined in **2.1.2, Part A**) of not less than 90 m, and intended for unrestricted service. However, the hull structure requirements for ships complying with either the following **(1)** or **(2)** may be in accordance with those specified in **Part C of the Rules for the Survey and Construction of Steel Ships** applied to ships for which the date of contract for construction was before 1 July 2023 (hereinafter referred to as "**Old Part C**").

(1) Sister ships of ships subject to **Old Part C** for which the date of contract for construction was before 1 January 2025

(2) Ships for which the date of contract for construction is before 1 January 2028 and whose length L_c is less than 200 m.

When **Old Part C** is applied, "*Advanced Structural Rules*" (abbreviated to *ASR*) defined in **1.2.1-4, Part A** is not to be affixed.

2 Hull construction, equipment and scantlings of ships to be classed for restricted service may be appropriately modified

depending on the condition of service in accordance with **Annex 1.1 "Special Requirements for Restricted Service"**.

1.1.2.2 Scope of Application

1 The requirements in **Part C** apply to monohull displacement-type ships which fulfill all of the following **(1)** to **(4)**:

(1) $L_C < 500$

(2) $L_C/B > 5.0$

(3) $B/D < 2.5$

(4) $C_B \geq 0.5$

2 For ships that fulfill either of the following **(1)** or **(2)**, special consideration is to be made for wave loads used in strength assessment:

(1) $L_C \geq 350$

(2) For ships deemed necessary by the Society

1.1.2.3 Special Cases in Application

For ships of unusual form or principal dimensions that do not fall under **1.1.2.2-1**, or ships where it is difficult to comply with **Part C** for some special reasons, the hull construction, equipment, and arrangement may be decided based upon the general principles of **Part C**.

1.1.2.4 Equivalency

1 Alternative hull construction, equipment, and arrangement not meeting the requirements in **Part C** will be deemed compliant with **Part C**, provided that the Society considers that such construction, equipment, and arrangement are equivalent to those required in **Part C**. However, this does not, in principle, apply to requirements based on international conventions or the IACS Unified Requirements.

2 Where **-1** above applies, special consideration is to be made according to the following **(1)** through **(3)**.

(1) Information is to be submitted to the Society to demonstrate that the structural safety of the ship is at least equivalent to that intended by **Part C**.

(2) The Society is to be contacted at an early stage in the design process to determine the applicability of the Rules and additional information required for submission.

(3) When deemed necessary by the Society, a systematic review may be performed to demonstrate the equivalency or superiority of the ship's structural safety to that intended by **Part C**.

3 Where information submitted beforehand is deemed appropriate by the Society, analysis and assessment may be carried out using one of the following **(1)** through **(5)** appropriate for each individual ship.

(1) Direct load analysis

(a) For wave loads used in strength assessment as specified in **4.4**, **4.5**, **4.6**, and **4.7**, loads may be set using direct load analysis for the individual ship.

(b) In application of **(a)** above, the analysis is to be in accordance with the requirements specified in the **"Guidelines for Direct Load Analysis and Strength Assessment"** issued by the Society.

(c) The sea states to be considered are to be those in the North Atlantic (all seasons). The wave scatter diagram specified in **IACS Recommendation No. 34 (November 2001)** is to be considered.

(2) Whole ship finite element analysis

(a) When a finite element model reproducing a whole ship is used in lieu of the partial structure model specified in **Chapter 8**, the analysis is to be performed in accordance with the requirements specified in the **"Guidelines for Direct Load Analysis and Strength Assessment"** issued by the Society.

(b) In application of **(a)** above, loads based on the requirement in **(a)** above are to be used instead of those specified in **Chapter 4**.

(3) Non-linear structural analysis (buckling strength assessment)

Buckling strength assessment may be carried out using a finite element method that takes into account non-linear responses due to materials and large deformations for structural elements to be considered in lieu of the buckling strength assessment in accordance with **Annex 8.6**. In this case, the analysis model is to correctly model geometrical imperfections and the effect of the surrounding structures. Alternatively, non-linear structural analysis may be carried out using an analysis model that correctly represents the surrounding structures or the entire cargo hold in addition to the structural elements to be considered, so that

buckling strength assessment that directly considers the effect of the surrounding structures may be carried out. Whichever approach is adopted, detailed information describing the analysis method and results is to be submitted to the Society.

(4) Derivation of stress concentration factors

As an alternative to **9.3.6**, geometrical stress concentration factors for the end connections of stiffeners may be derived by finite element analysis using a very fine mesh model in accordance with **9.3.7**. In such cases, information for review of the stress concentration factor derivation method is to be submitted beforehand to the Society for approval.

(5) Fatigue strength assessment based on full-spectrum analysis

Fatigue strength assessment based on full-spectrum analysis is to be carried out in accordance with the requirements specified in the **"Guidelines for Direct Load Analysis and Strength Assessment"** issued by the Society.

1.1.3 General Principles

1.1.3.1 Stability

The requirements specified in **Part C** are based on the assumption that ships will maintain appropriate stability in all conceivable service conditions.

1.1.3.2 Assumptions

The requirements in **Part C** are based on the following assumptions **(1)** through **(5)**:

(1) The intended use of the ship is specified, and the ship is designed according to the operational and structural requirements given in the Rules applicable to its intended use.

(2) The shipbuilder identifies and documents operational limits for the ship to ensure safe operation.

(3) The ship is built under an adequate quality control system.

(4) The operator of the ship recognises and complies with the operational limitations of the ship.

(5) The operator of the ship maintains the ship in good condition.

1.2 Application of the Rules

1.2.1 Description of the Rules

1.2.1.1 Composition

1 **Part C** comprises the following two parts:

- Part 1: General Hull Requirements
- Part 2: Ship Type-Specific Requirements

2 Each part is composed of chapters which specify detailed applications and requirements.

3 Requirements relevant to these chapters and considered appropriate to be summarised and provided separately are provided in annexes to the corresponding chapters.

1.2.1.2 Numbering

The system of numbering in **Part C** is given in **Table 1.2.1-1**.

Table 1.2.1-1 Rule Numbering

Order	Levels	Example
1	Part	Part 1 GENERAL HULL REQUIREMENTS
2	Chapter	Chapter 1 GENERAL
3	Section	1.1 General
4	Paragraph 1	1.1.1 Overview
5	Paragraph 2	1.1.1.1
6	Sub-paragraph	-1. The requirements in **Part C** apply to …
7	Item	(1)

1.2.2 Requirements of Rules

1.2.2.1 Composition and Application of the Respective Parts

1 **Part 1** specifies the following requirements that are to apply in principle to all ships:

- Chapter 1: General
- Chapter 2: General Arrangement Design
- Chapter 3: Structural Design Principles
- Chapter 4: Loads
- Chapter 5: Longitudinal Strength
- Chapter 6: Local Strength
- Chapter 7: Strength of Primary Supporting Structures
- Chapter 8: Strength Assessment by Cargo Hold Analysis
- Chapter 9: Fatigue
- Chapter 10: Additional Structural Requirements
- Chapter 11: Structures Outside Cargo Region
- Chapter 12: Welding
- Chapter 13: Rudders
- Chapter 14: Equipment

2 **Part 2** specifies requirements that are specific to the following types of ships and are to apply in addition to the requirements in **Part 1** unless otherwise specified. **Part 2** is structured in chapters, in principle the same as those in **Part 1**, except that some chapters may be omitted in the absence of additional requirements specific to the ship types concerned.

- Part 2-1: Container Carriers
- Part 2-2: Box-Shaped Bulk Carriers
- Part 2-3: Ore Carriers
- Part 2-4: Wood Chip Carriers
- Part 2-5: General Cargo Ships and Refrigerated Cargo Ships
- Part 2-6: Vehicles Carriers and Roll-On/Roll-Off Ships
- Part 2-7: Tankers
- Part 2-8: Ships Carrying Liquefied Gases in Bulk (Independent Spherical Tank of Type B)
- Part 2-9: Ships Carrying Liquefied Gases in Bulk (Independent Prismatic Tank of Type A/B)
- Part 2-10: Ships Carrying Liquefied Gases in Bulk (Independent Tank of Type C)
- Part 2-11: Ships Carrying Liquefied Gases in Bulk (Membrane Tank Type)

1.2.2.2 Application of Requirements

1 For the purpose of application of **Part C**, the ship is considered to be divided into the following six parts:

(1) Fore part

(2) Cargo region

(3) Machinery space

(4) Aft part

(5) Superstructure and deckhouses

(6) Rudders

2 The ship arrangement and scantlings are to comply with the relevant parts, chapters, and sections given in **Fig. 1.2.2-1**, unless otherwise specified.

Fig. 1.2.2-1 Application of Rules

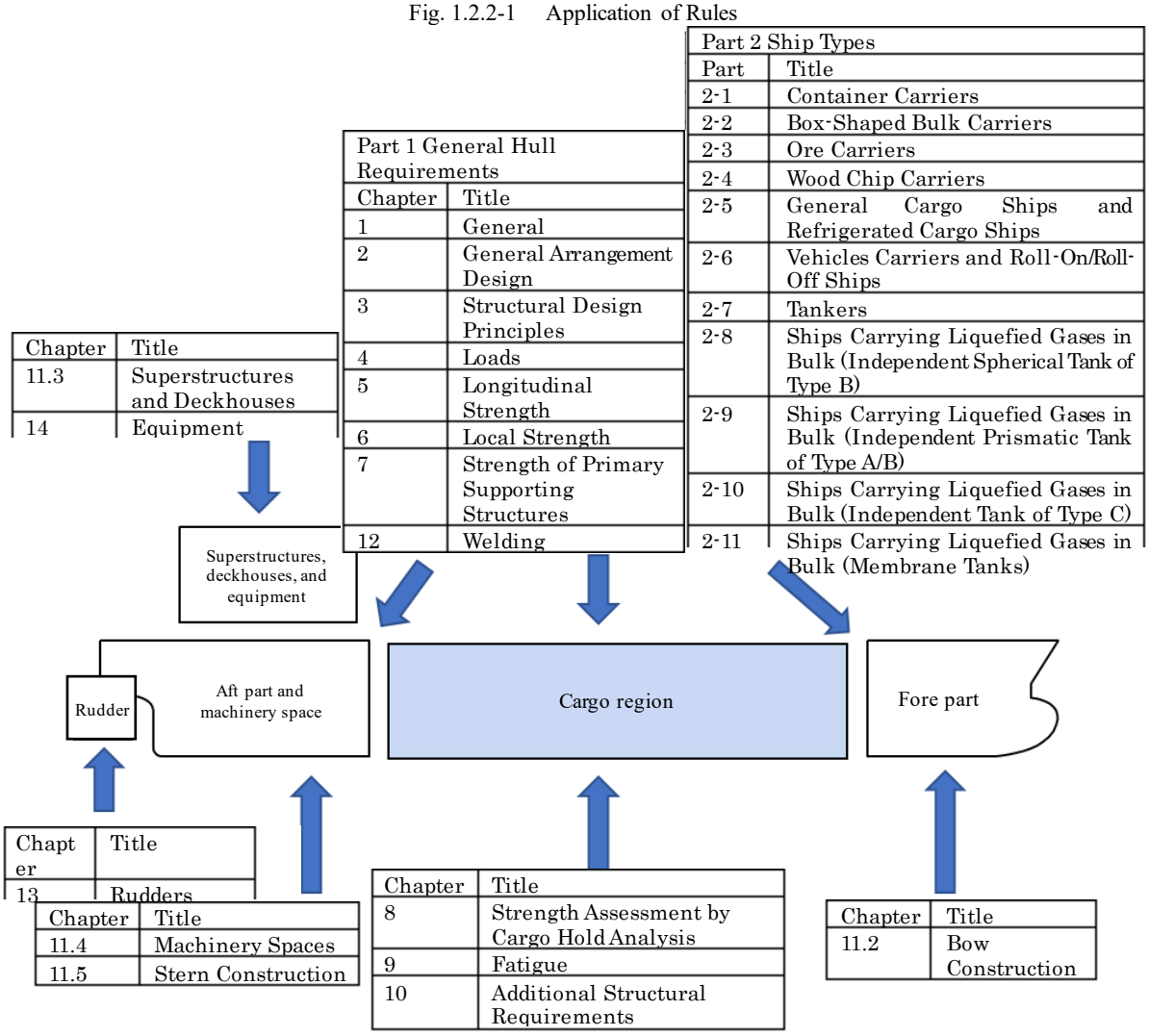

1.2.2.3 Scantlings

Unless otherwise specified, the scantlings in **Part C** are to be net scantlings.

1.2.2.4 Application of Strength Assessment Criteria to Primary Supporting Structures

For ships assessed for strength by cargo hold analysis as specified in **Chapter 8**, the requirements concerning the primary supporting structures in the relevant **Chapter 7** need not to be applied to the design load scenarios considered. Unless otherwise specified, the relationship between the application of **Chapters 7** and **8** is to be in accordance with the following **(1)** through **(3)** (*See* **Table 1.2.2-1**).

(1) For ships that fall under **8.1.2.1-1**, strength assessment is to be carried out taking into account the maximum load condition, the harbour condition, and the testing condition from among the design load scenarios specified in **4.6**. For the flooded conditions specified in **4.6**, ships are to satisfy either the strength assessment criteria specified in **Chapter 8** or the relevant requirements in **Chapter 7**.

(2) For ships that do not fall under **8.1.2.1-1** and to which the requirements in **Chapter 8** apply, the design load scenarios to be considered are to be selected from among those specified in **4.6**. When under the design load scenarios which are not considered, ships are to satisfy the relevant requirements in **Chapter 7**.

(3) Even ships that satisfy the strength assessment criteria given in **Chapter 8** are also to satisfy those for the scantlings of deck girders and pillars determined taking into account the deck and green sea loads from among the requirements in **Chapter 7**.

Table 1.2.2-1 Relationship of Application of **Chapters 7** and **8**

<table>
<tr><td></td><td>Ships falling under 8.1.2.1-1</td><td>Ships not falling under 8.1.2.1-1</td></tr>
<tr><td>Load under the maximum load condition specified in 4.6.2</td><td rowspan="3">Applicable</td><td rowspan="3">Optional
(The relevant requirements in Chapter 7 are to be met when Chapter 8 is not applied.)</td></tr>
<tr><td>Load under the harbour condition specified in 4.6.3</td></tr>
<tr><td>Load under the testing condition specified in 4.6.4</td></tr>
<tr><td>Load under the flooded condition specified in 4.6.5</td><td>Optional
(The relevant requirements in Chapter 7 are to be met when Chapter 8 is not applied.)</td></tr>
<tr><td>Requirements for deck girders and pillars taking into account the deck and green sea loads from among the requirements in Chapter 7</td><td colspan="2">The relevant requirements in Chapter 7 are to be met.
(Chapter 8 contains no relevant strength assessment criteria.)</td></tr>
</table>

1.2.2.5 Relationship with Other Rules of the Society

1 For ships to which **Part CSR-B&T** applies as specified in **1.1.2-4, Part A**, matters concerning the hull and equipment not specified in **Part CSR-B&T** are to be in accordance with the requirements in **Part C**.

2 The hull construction and equipment of ships carrying liquefied gases in bulk are to comply with the relevant requirements in **Part N** as well as those in **Part C**.

3 The hull construction and equipment of ships carrying dangerous chemicals in bulk are to comply with the relevant requirements in **Part S** as well as those in **Part C**.

4 The hull construction and equipment of ships operating in polar waters, polar class ships and ice class ships are to comply with the relevant requirements in **Part I** as well as those in **Part C**.

5 The hull construction and equipment of ships using low-flashpoint fuels are to comply with the relevant requirements in **Part GF** as well as those in **Part C**.

1.3 Principles for Strength Assessment

1.3.1 General

1.3.1.1

1 **1.3** specifies the factors, basic principles, and assessment methods to be considered for the strength assessment as concepts common to the strength requirements in **Part C**.

2 Where structural design is performed based on **1.1.2.3** without following the requirements specified in **Part C**, the concepts presented in **1.3** may be used as reference.

1.3.2 Factors to Be Considered for Strength Assessment

1.3.2.1 Sea State

1 The maximum loads to be considered for the assessment of yield strength, buckling strength, and ultimate strength are derived on the assumption that the ship operates in the North Atlantic.

2 The cyclic loads to be considered in examination of fatigue strength are based on the route to be served by the relevant type of ship or the utilisation rate achieved in the past.

1.3.2.2 Design Life

The ship's design life to be considered for the strength assessment is to be taken as 25 years. This design life is the assumed period of use of the ship. Note, however, that the actual service life of the ship may vary depending on the effect of the environment or ship handling, the maintenance of the ship, and other factors.

1.3.2.3 Air Temperature

Unless otherwise specified, the hull structural members to be considered in **Part C** are effective for the design temperature of -10 °C, which is the lowest daily average air temperature over one year. Ships operating in areas with low air temperature, where the lowest daily average air temperature is below -10 °C, are to comply with the requirements in **3.2.2.2**.

1.3.2.4 Wind and Current

In **Part C**, the effect of wind and current are not considered in hull structural strength assessment.

1.3.2.5 Ice

Unless otherwise specified, the effect of ice-induced loads is not taken into account in **Part C**.

1.3.2.6 Consideration of Thermal Stress

Unless otherwise specified, the effects of thermal stress are not considered in **Part C**. However, when deemed necessary by the Society, examination of the effects of thermal stress may be required.

1.3.2.7 Ship Speed

The maximum load in a strength assessment may take into account the effect of reduced speed during heavy weather. For cyclic loads, those at an average speed under seagoing conditions are to be considered.

1.3.2.8 Design Load Scenarios

The design load scenarios to be considered for the strength assessment are in accordance with the following **(1)** through **(5)**. However, when it is evident that structural responses under the scenarios concerned are not dominant over the structural strength, depending on the location of the member and the type of strength to be assessed, the assessment of the scenarios may be omitted.

(1) Maximum load condition: The maximum values of the structural responses that may occur in the hull during the in-service period of the ship are to be assessed. The anticipated sea states are to be taken as those in the North Atlantic (all seasons), and the in-service period is to be taken as 25 years.

(2) Harbour condition: Structural responses during cargo loading/unloading in harbour and during anchorage in sheltered waters are to be assessed. The purpose of assessment of the former is to assess the significant temporary structural responses that may occur in the cargo loading/unloading sequence, while the purpose of the latter is to assess the effect of waves in sheltered waters.

(3) Testing condition: The structural responses during the tank test are to be assessed.

(4) Flooded condition: Structural responses in the flooded condition are to be assessed. That is, for ships applying probabilistic damage stability requirements, the object of the assessment is the structural responses in the final equilibrium state (in which the probability of survival exceeds 0) in a damage stability calculation. For ships applying deterministic damage stability requirements, however, the object of the assessment is the structural responses in the flooding cases considered under those requirements. In addition, the structural responses during the voyage to the port of repair after flooding are also to be assessed.

(5) Cyclic load condition: For stress concentration areas where crack damage may occur, structural responses under cyclic load condition are to be assessed.

1.3.3 Basic Principles of Strength Assessment

1.3.3.1

The structural safety of a ship is confirmed by examining the possibility that the ship may be damaged because of the loads to which it is subjected during its in-service life.

1.3.3.2

The integrity of the hull structure is confirmed for the following **(1)** through **(4)** by performing strength assessments:

(1) The hull structure has sufficient strength so that permanent excessive deformation deemed as damage does not occur in any of its parts.

(2) The ship has sufficient redundancy so that local damage of structural elements such as plating and stiffeners does not lead to damage in a more extensive structure such as the primary supporting structures.

(3) The hull provides the residual strength sufficient to withstand wave loads for a certain period in a damaged condition due to causes such as collision and grounding. In the residual strength check, it is acceptable to perform an assessment that tolerates the deformation and buckling of some structures.

(4) Crack occurrence is to be minimised in parts or structures that are likely to affect structural integrity and watertightness, and parts that are likely to affect the performance of other systems and parts that are difficult to inspect and repair.

1.3.3.3

In **Part C**, in principle, net scantlings with full corrosion allowance reduction are used to perform a strength assessment to confirm directly that the ship maintains the sufficient strength specified in **1.3.3.2** above even in a condition of reduced plate thickness by corrosion after being placed into service.

1.3.4 Strength Assessment Methods

1.3.4.1 Longitudinal Strength

1 The yield and buckling strengths of the hull girder under a hull vertical bending moment at the maximum load level are assessed. This assessment is a primary screening assessment that takes into account only the hull vertical bending moment, which is the most important load for the hull structure.

2 The effect of a local load concurrent with the hull vertical bending moment is examined in a local strength assessment or in a strength assessment of the primary supporting structures.

3 The hull girder ultimate strength is to be assessed by applying a load that occurs under extremely severe sea states and has a lower probability of encounter than the maximum load considered in **-1** above. In this case, the effect of the local load is considered by using a specified coefficient or a more direct method.

1.3.4.2 Local Strength

1 The fact that plating and stiffeners have sufficient strength so that permanent deformation does not occur when exposed to loads of the maximum load level is confirmed. This assessment also considers the axial stress due to hull girder loads that occur simultaneously.

2 As a specific method for the assessment in **-1** above, a strength assessment is carried out depending on whether plastic hinge occurs at the plating support points. For stiffeners, the same is carried out depending on whether initial yielding occurs at the stiffener support points.

1.3.4.3 Strength of Primary Supporting Structures

1 In the strength assessment of primary supporting structures, it is confirmed that structural elements such as the plating and stiffeners that constitute the primary supporting structures do not yield or buckle because of the various stresses that occur in the primary supporting structures when exposed to loads of the maximum load level.

2 In the yield strength and buckling strength assessments in **-1** above, for framing systems and load conditions that intensify the effect of structural responses (e.g. stresses resulting from the redistribution of loads) not included in stresses obtained by linear theory, an assessment is carried out taking into account such effects.

1.3.4.4 Fatigue Strength

For discontinuous portions of structures in which fatigue cracks may occur, a direct fatigue strength assessment is carried out by the linear damage rule (Miner's Rule) based on hot spot stress. This assessment is to take into account the effect of factors such as mean stress and corrosion. For structural types that comply with the design standard specified in **9.6**, the fatigue strength assessment may be omitted.

1.3.4.5 Finite Element Analysis

The following three types of finite element analysis are used in **Part C** as methods of strength assessment:

(1) Cargo hold analysis to assess the strength of longitudinal strength members and primary supporting members in the cargo region, as well as that of bulkheads and members contributing to the overall structural integrity of the cargo holds. Here, the term cargo hold analysis refers to analyses carried out for the cargo region of a ship. The detailed requirements for cargo hold analysis are to be in accordance with **Chapter 8**.

(2) Very fine mesh analysis to assess the fatigue capacity of the structural details in accordance with **Chapter 9**

(3) Analyses other than those in **(1)** and **(2)** above in which models of specific structures are created and used to assess their strength.

1.4 Symbols and Definitions

1.4.1 Application

1.4.1.1 General

The symbols and definitions in **Part C** are as specified in this section, unless otherwise stated in the subsequent chapters. For symbols and definitions not specifically specified in **Part C**, refer to **Part A**.

1.4.2 Primary Symbols and Units

1.4.2.1 General

Unless otherwise specified, the general symbols and their units used in **Part C** are those defined in **Table 1.4.2-1**.

Table 1.4.2-1 Primary Symbols

Symbol	Meaning	Unit
A	Area	m^2 or cm^2
C	Coefficient	-
F	Force and concentrated loads	kN
I	Moment of inertia	m^4 or cm^4
M	Bending moment	$kN\text{-}m$ or $N\text{-}m$
m	Mass	t
P	Pressure	kN/m^2
Q	Shear force	kN or N
T	Draught of ship	m
Z	Section modulus	cm^3
a	Acceleration	m/s^2
b	Width	mm
g	Gravity acceleration, equal to 9.81 m/s^2	m/s^2
h	Height	m or mm
n	Number of items	-
r	Radius	mm
t	Thickness	mm
x	X coordinate along longitudinal axis (*See* **1.4.3.6**)	m
y	Y coordinate along transverse axis (*See* **1.4.3.6**)	m
z	Z coordinate along vertical axis (*See* **1.4.3.6**)	m
η	Permissible utilisation factor (usage factor)	-
δ	Deflection/displacement	mm
θ	Angle	deg
ρ	Density of seawater, taken equal to 1.025 t/m^3	t/m^3

Symbol	Meaning	Unit
σ	Normal stress	N/mm^2
τ	Shear stress	N/mm^2

1.4.2.2 Ship's Main Data

Unless otherwise specified, the symbols of a ship's main data and their units used in **Part C** are those defined in **Table 1.4.2-2**.

Table 1.4.2-2 Ship's Main Data

Symbol	Meaning	Unit
L_C	Ship length, but to be taken as 90 *m* where not greater than 90 *m* (*See* **1.4.3.1-1**)	*m*
L_f	Freeboard length (*See* **1.4.3.1-2**)	*m*
L_{PP}	Length between perpendiculars	*m*
L_{C200}	Ship length L_C, but to be taken as 200 *m* where greater than 200 *m*	*m*
L_{C230}	Ship length L_C, but to be taken as 230 *m* where greater than 230 *m*	*m*
L_{C250}	Ship length L_C, but to be taken as 250 *m* where greater than 250 *m*	*m*
L_{C300}	Ship length L_C, but to be taken as 300 *m* where greater than 300 *m*	*m*
L_{C330}	Ship length L_C, but to be taken as 330 *m* where greater than 330 *m*	*m*
B	Moulded breadth of ship (*See* **1.4.3.1-3**)	*m*
D	Moulded depth of ship (*See* **1.4.3.1-4**)	*m*
T	Moulded draught (*See* **1.4.3.1-5**)	*m*
T_{SC}	Scantling draught (*See* **1.4.3.1-5**)	*m*
T_{BAL}	Ballast draught (minimum ballast draught at midship) (*See* **1.4.3.1-5**)	*m*
$T_{BAL\text{-}H}$	Heavy ballast draught at midship (*See* **1.4.3.1-5**), which is a draught at a heavy ballast condition. The heavy ballast condition refers to a ballast condition involving filling a cargo hold designed as a ballast cargo hold ballast water up to the hatchways.	*m*
$T_{BAL\text{-}E}$	Emergency ballast draught at midship, which is a draught at an emergency ballast condition. The emergency ballast condition refers to a ballast condition involving a cargo oil tank loaded with ballast water at emergency or heavy weather conditions allowable under *Regulation 18 of Annex I to the MARPOL Convention*.	*m*
T_{LC}	Midship draught in the loading condition to be considered	*m*
f_T	Ratio between the draught in the loading condition to be considered and the scantling draught is to be obtained from the following formula but is not to be less than 0.5: $f_T = \frac{T_{LC}}{T_{SC}}$	-
Δ	Moulded displacement at the scantling draught T_{SC}	*t*
A_W	Waterplane area at the scantling draught T_{SC}	m^2

Symbol	Meaning	Unit
C_B	Block coefficient at the scantling draught T_{SC} (*See* **1.4.3.1-8**)	-
C_{B1}	Block coefficient at the scantling draught T_{SC}, but to be taken as 0.6 where less than 0.6.	-
C_{B2}	Block coefficient at the scantling draught T_{SC}, but to be taken as 0.6 where less than 0.6, and to be taken as 0.8 where greater than 0.8.	-
C_{B3}	Block coefficient at the scantling draught T_{SC}, but to be taken as 0.6 where less than 0.6, and to be taken as 0.8 where greater than 0.8. To be taken as 0.8 where calculating b for an aft bulkhead located forward of midship.	-
C_{B4}	Block coefficient at the scantling draught T_{SC}, but to be taken as 0.6 where less than 0.6, and to be taken as 0.8 where greater than 0.8. To be taken as 0.8 where calculating b for the aft ends of coamings and aft hatch cover skirt plates located forward of midship.	-
C_{B_LC}	Block coefficient under the loading condition to be considered. If C_{B_LC} is not available, C_{B_LC} may be obtained by the following formula: $C_{B_LC} = C_B - 1.03\left(1 - \frac{C_B}{C_W}\right)(1 - f_T)$	-
C_W	Waterplane coefficient at the scantling draught T_{SC}, to be obtained from the following formula: $C_W = \frac{A_W}{L_C B}$	-
C_{W_LC}	Waterplane coefficient under the loading condition to be considered. If C_{W_LC} is not available, C_{W_LC} may be obtained from the following formula: $C_{W_LC} = C_W - 1.42\left(1 - \frac{C_B}{C_W}\right)(1 - f_T)$	-
C_{VP_LC}	Vertical prismatic coefficient under the loading condition to be considered, to be obtained from the following formula: $C_{VP_LC} = \frac{C_{B_LC}}{C_{W_LC}}$	-
V	Maximum service speed (*See* **1.4.3.1-7**)	*knot*

1.4.2.3 Materials

Unless otherwise specified, the symbols of the materials and their units used in **Part C** are those defined in **Table 1.4.2-3**.

Table 1.4.2-3 Materials

Symbol	Meaning	Unit
E	Young's modulus, to be taken as 206,000 N/mm^2	N/mm^2
G	Shear modulus, to be obtained from the following formula: $G = \frac{E}{2(1+\nu)}$	N/mm^2
σ_Y	Specified minimum yield stress (*See* **3.2**)	N/mm^2
τ_Y	Specified shear yield stress $\tau_Y = \frac{\sigma_Y}{\sqrt{3}}$	N/mm^2
ν	Poisson's ratio, to be taken as 0.3	-
K	Material factor (*See* **3.2**)	-
σ_m	Specified minimum tensile strength	N/mm^2

1.4.2.4 Loads

Unless otherwise specified, the symbols regarding loads and their units used in **Part C** are those defined in **Table 1.4.2-4**.

Table 1.4.2-4 Loads

Symbol	Meaning	Unit
C_1	Wave coefficient, to be taken as: $C_1 = 10.75 - \left(\frac{300 - L_C}{100}\right)^{1.5}$ for $L_C \leq 300$ $C_1 = 10.75$ for $300 < L_C \leq 350$ $C_1 = 10.75 - \left(\frac{L_C - 350}{150}\right)^{1.5}$ for $L_C > 350$	-
T_θ	Rolling period	s
θ	Rolling angle	deg
T_ϕ	Pitch period	s
ϕ	Pitch angle	deg
a_X	Longitudinal acceleration	m/s^2
a_Y	Transverse acceleration	m/s^2
a_Z	Vertical acceleration	m/s^2
GM	Metacentric height	m
λ	Wave length	m
P_{ex}	External pressure acting on the outer shell	kN/m^2
P_{ex_S}	Hydrostatic pressure	kN/m^2
P_{ex_W}	Hydrodynamic pressure	kN/m^2
P_{in}	Internal pressure acting on the hull	kN/m^2

Symbol	Meaning	Unit
P_{ins}	Static pressure	kN/m^2
P_{inw}	Dynamic pressure	kN/m^2
P_{ls}	Static pressure acting on tanks carrying liquids and ballast holds	kN/m^2
P_{ld}	Dynamic pressure acting inside tanks carrying liquids and ballast holds	kN/m^2
P_{bs}	Static pressure inside cargo holds loaded with bulk cargo	kN/m^2
P_{bd}	Dynamic pressure inside cargo holds loaded with bulk cargo	kN/m^2
P_{GW}	Green sea deck pressure	kN/m^2
P_{dk}	Deck load due to unspecified cargoes or stores loaded on general cargo ships and the like	kN/m^2
P_{SL}	Bottom slamming pressure	kN/m^2
P_{FB}	Bow impact pressure	kN/m^2
P_{FD-ex}	External pressure in flooded conditions	kN/m^2
P_{ST}	Tank testing pressure (static)	kN/m^2
M_{SV_j}	Vertical still water bending moment, $j = max, min$ (maximum permissible vertical still water bending moment, minimum permissible vertical still water bending moment)	*kN-m*
M_{WV-i}	Vertical wave bending moment, $j = h, s$ (hog, sag)	*kN-m*
Q_{SV_j}	Vertical still water shear force, $j = max, min$ (maximum permissible vertical still water bending moment, minimum permissible vertical still water bending moment)	*kN*
Q_{WV}	Vertical wave shear force	*kN*
M_{WT}	Torsional wave moment	*kN-m*
M_{WH}	Horizontal wave bending moment	*kN-m*

1.4.2.5 Scantlings

Unless otherwise specified, the symbols regarding scantlings and their units used in **Part C** are those defined in **Table 1.4.2-5**.

Table 1.4.2-5 Scantlings

Symbol	Meaning	Unit
X_{n50}	Net scantling of X, to be determined by net thickness with 50 % corrosion addition reduction (e.g. t_{n50}: Net thickness with half corrosion addition reduction)	Corresponding to the unit of X
X_{n25}	Net scantling of X, to be determined by net thickness with 25 % corrosion addition reduction (e.g. t_{n25}: Net thickness with 25 % corrosion additions reduction)	Corresponding to the unit of X
I_y	Net vertical moment of inertia of hull girder	m^4
I_z	Net horizontal moment of inertia of hull girder	m^4
Z_D, Z_B	Net vertical hull girder section moduli at the deck and bottom, respectively	cm^3

Symbol	Meaning	Unit
z_n	Vertical distance from the top of the keel to the horizontal neutral axis	*m*
a	Length of elementary plate panel (*EPP*), as defined in **3.7.1.1**	*mm*
b	Breadth of elementary plate panel (*EPP*), as defined in **3.7.1.1**	*mm*
s	Stiffener spacing (*See* **3.6.2.1**)	*mm*
S	Primary supporting member spacing (*See* **3.6.2.2**)	*m*
ℓ, l	Span of stiffeners or primary supporting members (*See* **3.6.1**)	*m* or *mm*
ℓ_{bdg}, l_{bdg}	Effective bending span (*See* **3.6.1**)	*m* or *mm*
ℓ_{shr}, l_{shr}	Effective shear span (*See* **3.6.1**)	*m* or *mm*
l_b	Bracket arm length	*mm*
t	Net thickness with full corrosion addition reduction	*mm*
t_c	Corrosion addition	*mm*
t_{gr}	Gross thickness	*mm*
t_{as_built}	As-built thickness	*mm*
t_{gr_off}	Gross thickness offered	*mm*
t_{gr_req}	Gross thickness required	*mm*
t_{off}	Net thickness offered	*mm*
t_{req}	Net thickness required	*mm*
t_{vol_add}	Thickness for voluntary addition	*mm*
t_{res}	Reserve thickness	*mm*
t_{c1}, t_{c2}	Corrosion addition on each side of structural member	*mm*
h_w	Web height of stiffener or primary supporting member	*mm*
t_w	Web thickness of stiffener or primary supporting member	*mm*
b_f	Face plate width of stiffener or primary supporting member	*mm*
h_{stf}	Height of stiffener, including that of the face plate	*mm*
t_f	Face plate/flange thickness of stiffener or primary supporting member	*mm*
t_p	Thickness of plating attached to a stiffener or a primary supporting member	*mm*
d_e	Distance from the upper edge of the web to the top of the flange for *L*3 profiles	*mm*
b_{eff}	Effective breadth of plating attached to a stiffener	*mm*
A_{eff}	Net sectional area of stiffener or primary supporting member with attached plating (of width *s*)	cm^2
A_{shr}	Net shear sectional area of stiffener or primary supporting member	cm^2
I_p	Net polar moment of inertia of stiffener about its connection to plating	cm^4

Symbol	Meaning	Unit
I	Net moment of inertia of a stiffener with attached shell plating about its neutral axis parallel to a plate member	cm^4
Z	Net section modulus of a stiffener or primary supporting member with attached plating (of breadth b_{eff})	cm^3

1.4.3 Definitions

1.4.3.1 Principal Particulars

1 The ship length L_C is to be in accordance with the following **(1)** to **(3)**, but is to be taken as 90 *m* in cases where not greater than 90 *m*:

(1) The ship length L_C (*m*) is to be the distance measured on the waterline at the scantling draught T_{SC} from the forward side of the stem to the after side of the rudder post for ships with a rudder post or to the centre of the rudder stock for ships without a rudder post. L_C is to be not less than 96 % but need not exceed 97 % of the extreme length on the waterline at the scantling draught T_{SC}.

(2) In ships without a rudder stock (e.g. ships fitted with azimuth thrusters), the ship length L_C is to be taken as equal to 97 % of the extreme length on the waterline at the scantling draught T_{SC}.

(3) In ships with an unusual stem or stern arrangements, the ship length is to be deemed appropriate by the Society on a case-by-case basis.

2 The freeboard length L_f is to be in accordance with the following **(1)** to **(4)**. In the following **(1)** to **(4)**, the least moulded depth D_f (*m*) refers to the minimum vertical distance measured from the top of the keel to the underside of the freeboard deck at side.

(1) The freeboard length L_f (*m*) is to be taken as 96 % of the total length on a waterline at 85 % of the least moulded depth D_f measured from the top of the keel, or as the length from the fore side of the stem to the axis of the rudder stock on that waterline, if greater.

(2) For ships without a rudder stock, the freeboard length L_f is to be taken as 96 % of the waterline at 85 % of the least moulded depth D_f.

(3) Where the stem contour is concave above the waterline at 85 % of the least moulded depth D_f, both the forward end of the extreme length and the forward side of the stem are to be taken at the vertical projection to that waterline of the aftermost point of the stem contour above that waterline (*See* **Fig. 1.4.3-1**).

(4) For ships to which the requirements in **Part V** do not apply, L_f in the requirements is to be read and applied as L_C.

Fig. 1.4.3-1 Concave Stem Contour

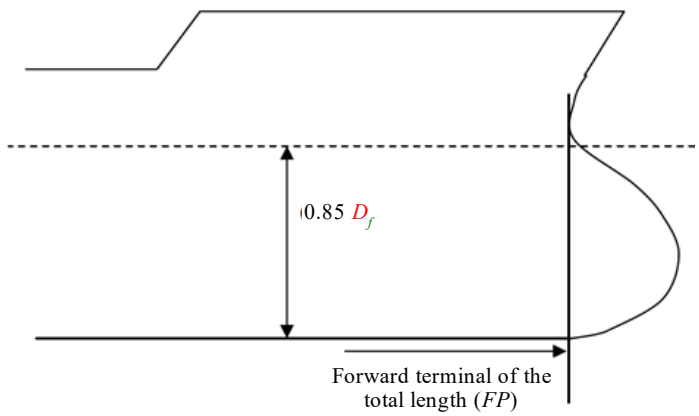

3 The moulded breadth B (*m*) is the greatest moulded breadth measured amidships at the scantling draught T_{SC}.

4 The moulded depth D (*m*) is the vertical distance measured amidships from the top of the keel to the underside of the freeboard deck at side. On ships with a rounded gunwale, D is to be measured to the continuation of the moulded deck line.

5 The moulded draught T (m) is the summer load line draught for the ship in operation measured from the top of the keel at midship. The moulded draught may be less than the maximum permissible summer load waterline draught. The draught considered for the strength assessment is to be in accordance with the following **(1)** to **(3)**.

(1) T_{SC} (m) is the scantling draught and represents the full load condition. The scantling draught T_{SC} is to be not less than that corresponding to the assigned freeboard. The draught of ships to which timber freeboards are assigned corresponds to the loading condition of timber, and the requirements of the Society are to be applied to this draught.

(2) T_{BAL} (m) is the minimum design normal ballast draught amidships. This normal ballast draught is the minimum draught for all ballast conditions in the loading manual, including both the departure and arrival conditions.

(3) $T_{BAL\text{-}H}$ (m) is the minimum design heavy ballast draught amidships. This heavy ballast draught is to be considered for ships placed in the heavy ballast condition.

6 Moulded displacement (t) corresponds to the underwater volume of the ship at a draught in seawater with a density of 1.025 t/m^3.

7 Maximum service speed V (*knots*) means the greatest speed that the ship is designed to maintain in service at her deepest seagoing draught at the maximum propeller rotation speed (*RPM*) and corresponding engine maximum continuous rating (*MCR*).

8 The block coefficient C_B at the scantling draught T_{SC} is defined in the following equation:

$$C_B = \frac{\Delta}{1.025 L_C B T_{SC}}$$

Δ: Moulded displacement (t) of a ship at the scantling draught T_{SC}.

9 Lightweight (t) is the displacement of a ship complete in all respects but without cargoes, consumable stores, crew and their effects, and without any liquids on board except that machinery and piping fluids such as lubricants and hydraulics at operating levels.

10 Deadweight (t) is the difference between the displacement at the summer draught in seawater of density $\rho = 1.025$ t/m^3 and the lightweight of the ship.

11 The fore end (*FE*) of the ship length L_C is the perpendicular to the scantling draught waterline at the forward side of the stem, as shown in **Fig. 1.4.3-2**.

12 The aft end (*AE*) of the ship length L_C is the perpendicular to the scantling draught waterline at a distance L_C aft of the fore end, as shown in **Fig. 1.4.3-2**.

Fig. 1.4.3-2 Ends and Midship

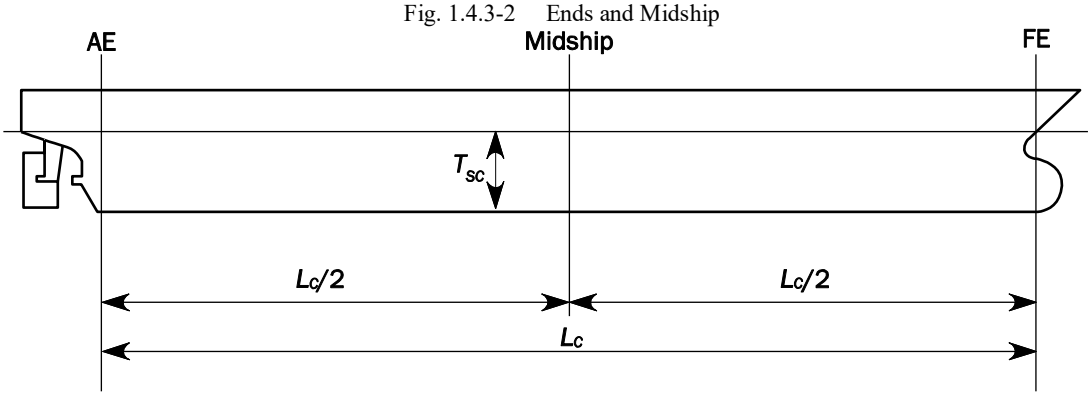

13 The midship is the perpendicular to the scantling draught waterline T_{SC} at a distance $0.5L_C$ aft of the fore end.

14 The midship part of a ship is the part extending $0.4L_C$ amidships, unless otherwise specified.

1.4.3.2 Positions of Exposed Decks

1 The positions of the exposed decks are defined as in the following **(1)** and **(2)** (*See* **Fig. 1.4.3-3**). In the following **(1)** and **(2)**, h_s is to be taken as the standard height of the superstructure specified in **Table 1.4.3**.

(1) Position 1

(a) Exposed freeboard and raised quarter decks. "Exposed raised quarter decks" refers to exposed superstructure decks lower than h_s above the freeboard deck.

(b) Exposed superstructure decks situated forward of the point located $0.25L_f$ abaft the fore end of L_f. "Exposed superstructure deck" refers to those lower than $2h_s$ above the freeboard deck.

(2) Position 2

(a) Exposed superstructure decks situated abaft of the point located $0.25L_f$ abaft the fore end of L_f and located at least one standard height of superstructure above the freeboard deck. "Exposed superstructure deck located at least one standard height of superstructure above the freeboard deck" refers to exposed superstructure decks at or higher than h_s but lower than $2h_s$ above the freeboard deck.

(b) Exposed superstructure decks situated forward of the point located $0.25L_f$ abaft the fore end of L_f and located at least two standard heights of superstructure above the freeboard deck. "Exposed superstructure deck located at least two standard heights of superstructure above the freeboard deck" refers to exposed superstructure decks at or higher than $2h_s$ but lower than $3h_s$ above the freeboard deck.

Fig. 1.4.3-3 Positions of Exposed Decks

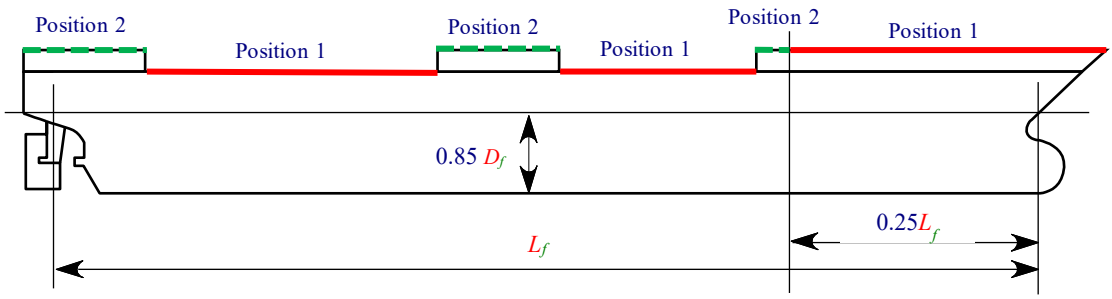

2 In the requirements in **-1** above, superstructure decks include the top decks of superstructures, deckhouses, companionways, and other similar deck structures.

3 To determine the positions of the exposed decks defined in **-1** above for ships with an unusually large freeboard as specified in 1.4.3.5, the exposed decks are to be treated as follows in relation to the vertical distance H_D from an assumed freeboard deck to the exposed deck at side:

$h_S \leq H_D < 2h_S$: Superstructure deck of first tier above the freeboard deck

$2h_S \leq H_D < 3h_S$: Superstructure deck of second tier above the freeboard deck

$3h_S \leq H_D$: Superstructure deck of third or subsequent tier above the freeboard deck

1.4.3.3 Standard Height of Superstructure

Standard height of superstructure is defined in Table 1.4.3.

Table 1.4.3 Standard Height of Superstructure

Freeboard length L_f (m)	Standard height h_s (m)	
	Raised quarter deck	All other superstructures
75	1.20	1.80
$L_f \geq 125$	1.80	2.30
For intermediate values of L_f, h_s is to be obtained by linear interpolation.		

1.4.3.4 Type A and Type B Freeboard Ships

1 Ships are to be assigned a freeboard following the requirements specified in Part V.

2 Type A freeboard ship means the following ships:

(1) Ships designed to carry only liquid cargoes in bulk.

(2) Ships that have high integrity of the exposed deck, with only small access openings to cargo compartments closed by watertight gasketed covers of steel or equivalent material.

(3) Ships in which the loaded cargo compartments have low permeability.

3 All ships that do not come within the requirements of Type A freeboard ships stated in **-2** above are to be considered Type B

freeboard ships.

4 A Type B-60 or Type B-100 freeboard ship is any Type B freeboard ship having a freeboard length L_f exceeding 100 *m* in which the freeboard can be reduced according to applicable requirements of the International Convention on Load Lines (ICLL).

5 A Type B+ freeboard ship is any ship with a freeboard larger than that required in Type B freeboard ships.

1.4.3.5 Ships with Unusually Large Freeboard

Ships with an unusually large freeboard are ships having freeboards that comply with following formula. (*See* **Fig. 1.4.3-4**):

$f_S \geq h_S + f$

f_s: Actual summer freeboard assigned by the requirements in **Part V**

h_s: Standard height of superstructure determined by the requirements in **1.4.3.3**

f : Minimum summer freeboard determined by the requirements in **Part V** on the basis of an assumed freeboard deck which is measured down from the actual freeboard deck by h_s

Fig. 1.4.3-4 Ship with Unusually Large Freeboard

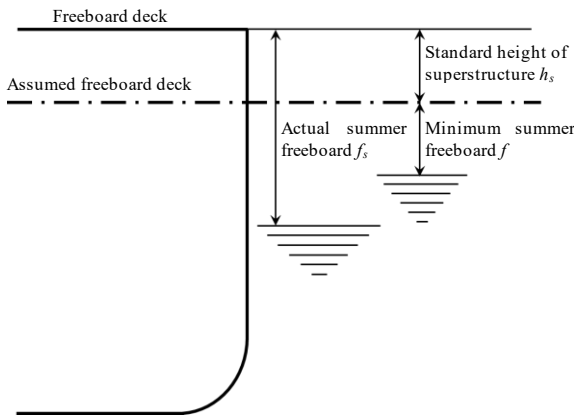

1.4.3.6 Reference Coordinate System

The ship's geometry, motions, accelerations and loads are defined with respect to the following right-hand coordinate system (*See* **Fig. 1.4.3-5**):

Origin: At the intersection among the longitudinal plane of symmetry of the ship, the aft end of L_C, and the top of the keel.

X-axis: Longitudinal axis, positive forwards.

Y-axis: Transverse axis, positive towards portside.

Z-axis: Vertical axis, positive upwards.

Fig. 1.4.3-5 Reference Coordinate System

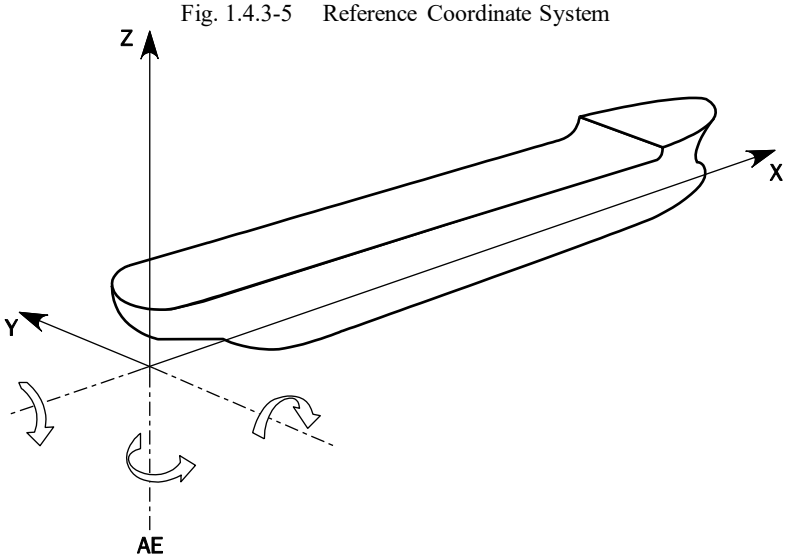

1.4.4 Glossary

1.4.4.1 Definition of Terms

The definitions of terms are in accordance with Table 1.4.4-1.

Table 1.4.4-1 Definition of Terms

Terms	Definition
Accommodation deck	A deck used primarily for the accommodation of the crew.
Accommodation ladder	A portable set of steps on a ship's side for use by persons boarding from small boats or from a pier.
Aft peak	The area aft of the aft peak bulkhead.
Aft peak bulkhead	The first main transverse watertight bulkhead forward of the stern.
Aft peak tank	The compartment in the narrow part of the stern aft of the aft peak bulkhead.
Anchor	A device that is attached to an anchor chain at one end and lowered into the seabed to hold a ship in position.
Anchor cable	A fibre rope or chain attached to the anchor.
Ballast hold	A dry cargo hold used to load ballast water. However, this term does not apply to holds used as ballast cargo holds only when in harbour.
Ballast tank	A compartment used for the storage of ballast water.
Bay	The area between adjacent transverse frames or transverse bulkheads.
Bilge hopper plating	Plating running the length of a compartment sloping between the inner bottom and the vertical portion of the side shell or inner hull longitudinal bulkhead.
Bilge hopper tank	A tank installed on the broadside below a cargo hold and used for ballast water or for stability when carrying certain cargoes.
Bilge keel	A plate set perpendicular to a ship's shell along the bilges to reduce the rolling motion.
Bilge plating	Curved plating between the bottom shell and side shell as follows: Within the cylindrical part of the ship: From the start of the curvature at the lower turn of the bilge on the bottom to the end of the curvature at the upper turn of the bilge, Outside the cylindrical part of the ship: From the start of the curvature at the lower turn of the bilge on the bottom to the lesser of: • A point on the side shell located 0.2 *D* above the top of the keel/local centreline elevation. • The end of the curvature at the upper turn of the bilge.
Bilge strake	A single strake of bilge plating to which a bilge keel is attached in locations where a bilge keel is attached. In other locations, a single strake of bilge plating on the line extending longitudinally forward and afterward of the bilge keel.
Boss	The boss of a propeller is the central part to which propeller blades are attached and through which the propeller shaft end passes.
Bottom longitudinal	A stiffener arranged longitudinally on the inner surface of the bottom shell.
Bottom shell	The shell envelope plating forming the predominantly flat bottom portion of the shell envelope, including the keel plate.

Terms	Definition
Bow	The structural arrangement and form of the forward end of the ship.
Bracket	An extra structural component used to increase the strength of a joint between two structural members.
Bracket toe	The narrow end of a tapered bracket.
Breakwater	An inclined and stiffened plate structure on a weather deck to break and deflect the flow of water coming over the bow.
Breast hook	A triangular plate bracket joining port and starboard side structural members at the stem.
Bridge	An elevated superstructure having a clear view forward and at each side, from which a ship is steered.
Buckling panel	An elementary plate panel considered in assessment of buckling strength.
Bulb profile	A stiffener utilising an increase in steel mass on the outer end of the web instead of a separate flange.
Bulkhead	A structural partition wall subdividing the interior of the ship into compartments.
Bulkhead deck	The uppermost continuous deck reached by transverse watertight bulkheads and shell.
Bulkhead structure	Transverse or longitudinal bulkhead plating supported by stiffeners and girders.
Bulwark	A structure immediately above the upper edge of the ship's side surrounding the exposed deck.
Bunker	A compartment for the storage of fuel oil used by the ship's engine.
Camber	The upward rise of the weather deck from both sides towards the centreline of the ship.
Cargo region	The part of a ship that contains cargo holds (including cargo tanks), ballast tanks and slop tanks. Includes the full breadth and depth of the ship, the collision bulkhead and the transverse bulkhead at its aft end. The cargo region does not include the pump room, if any.
Cargo hold	A generic term for spaces intended to carry cargo in liquid or dry bulk form.
Cargo tank	A tank carrying cargoes.
Cargo tank bulkhead	A boundary bulkhead separating cargo tanks.
Carlings	A stiffening member used to supplement the regular stiffening arrangement.
Casing	A covering or bulkhead for protection of a space.
Cellular construction	A structural arrangement consisting of closely spaced boundaries with internal diaphragm plates arranged to form small compartments.
Centreline girder / Centre girder	A longitudinal member located on the centreline of a ship.
Chain	Connected metal rings or links used to hold anchors, fasten timber cargoes, etc.
Chain locker	A compartment, usually at the forward end of a ship, used to store the anchor chain.
Chain pipe	A section of pipe through which the anchor chain enters or leaves the chain locker.

Terms	Definition
Chain stopper	A device for securing the chain cable when riding at anchor as well as securing the anchor in the housed position in the hawse pipe to relieve the strain on the windlass.
Coaming	The vertical boundary structure of a hatch or skylight.
Cofferdam	A void space between two adjacent bulkheads or decks.
Collar plate	A patch used to partly or completely close an opening cut for a longitudinal passing through a transverse web.
Collision bulkhead	The foremost transverse watertight bulkhead.
Companionway	A weathertight entrance leading from a ship's deck to the spaces below.
Compartment	An internal space bounded by bulkheads or plating.
Corrugated bulkhead	A bulkhead with a corrugated structure.
Corrugation	Plating arranged in a corrugated fashion, shedder and gusset plated excluded.
Cross deck	A deck in the area between cargo hatches closer to the centreline of the ship than the hatch side coamings.
Cross ties	Large transverse structural members joining longitudinal bulkheads or joining a longitudinal bulkhead with side structures to support the bulkheads against hydrostatic and dynamic loads.
Deck	The horizontal structural plating that defines the upper or lower boundary of a compartment.
Deck beam	A stiffener arranged transversely on a deck.
Deckhouse	A decked structure on the freeboard or superstructure deck that does not fit the definition of a superstructure.
Deck structure	Deck plating and stiffeners, primary supporting members, and pillars attached thereto.
Deck girder	A longitudinal primary supporting member in a deck.
Deck longitudinal	A stiffener arranged longitudinally on a deck.
Deck transverse	A transverse primary supporting member in a deck.
Deep tank	A tank used for the carriage of water, fuel oil, or other liquids, forming a part of the hull.
Discharges	Any piping leading through a ship's sides for discharge of bilge water, cooling water, drains, etc.
Docking bracket	A bracket located in the double bottom to locally strengthen the bottom structure for the purpose of docking.
Double bottom structure	Shell plating with stiffeners below the top of the inner bottom plating and other elements below and including the inner bottom plating.
Doubler	A small plate member attached to an area that requires strengthening.
Double skin member	A double skin member is defined as a structural member considered as a beam structure comprising webs and top and bottom flanges formed by plating attached to the webs.
Duct keel	A keel built of plates in box form to provide a space, generally used to house piping, etc.

Terms	Definition
Enclosed superstructure	A superstructure with bulkheads forward and/or aft fitted with weathertight doors and closing appliances.
End bracket	A bracket located at an end of a member.
EPP	An elementary plate panel, the smallest plate element surrounded by structural members such as stiffeners, primary supporting members, bulkheads, etc.
Face plate	A section of a stiffening member attached to a web, usually parallel to the plate member.
Flange	A section of a stiffening member, typically attached to the web but sometimes formed by bending the web. Usually parallel to the plate member.
Flat bar	A stiffener comprising only a web.
Floor	A transverse girder located at a double bottom.
Forecastle	A short superstructure situated at a ship's bow.
Fore peak	The area of a ship forward of the collision bulkhead.
Frame	A stiffener arranged longitudinally or transversely on the inner surface of the shell.
Freeboard deck	Generally the uppermost complete deck exposed to weather and the sea, which has permanent means of closing all exposed openings.
Freeing port	An opening in a bulwark to allow water shipped on deck to run freely overboard.
Fuel oil tank	A tank used for the storage of fuel oil.
Gangway	A raised walkway between a superstructure, such as between the forecastle and bridge or between the bridge and poop.
Gudgeon	A block with a hole in the centre to receive the pintle of a rudder; located on the stern post, which supports and allows the rudder to swing.
Gunwale	The upper edge of a ship's side.
Gusset	A plate, usually fitted to distribute forces at a strength connection between two structural members.
Hatch beam	A beam placed across a hatchway.
Hatch cover	A cover fitted over a hatchway to prevent the ingress of water into the ship's hold.
Hatch end beam	A primary supporting member fitted to the fore and aft ends of a hatchway.
Hatch side girder	A primary supporting member attached to a hatch side deck.
Hatchways	Openings, generally rectangular, in a ship's deck, affording access to the compartment below.
Hawse pipe	A steel pipe through which the hawser or cable of an anchor passes, located in the ship's bow on both sides of the stem.
Hawser	A large steel wire or fibre rope used for towing or mooring.
Horizontal girder	A girder arranged horizontally on a bulkhead.
IACS	International Association of Classification Societies

Terms	Definition
ICLL	IMO International Convention on Load Lines, 1966, as amended.
IMO	International Maritime Organisation
Independent tank	A self-supported tank.
Inner bottom plating	Plating forming the top of a double bottom structure.
Inner hull	The innermost plating forming a second layer in the hull of a ship.
Intercostal	A noncontinuous member between stiffeners or primary supporting members.
JIS	Japanese Industrial Standards.
Keel	The main structural member or backbone of a ship, running longitudinally along the centreline of the bottom. Usually, a flat plate stiffened by a vertical plate on its centreline inside the shell.
Keel line	The keel line is the line parallel to the slope of the keel intersecting the top of the keel at amidships.
Knuckle	A bend part of a structural member.
Lightening hole	A hole cut in a structural member to reduce its weight.
Limber hole	A small drain hole cut in a frame or plate to prevent water or oil from collecting.
Local supporting members	Local stiffening members that only influence the structural integrity of a single panel.
Longitudinal bulkhead	A bulkhead placed in the longitudinal direction of a ship., including the inner hull forming a double side hull.
Longitudinal framing system	A mode of construction in which frames are arranged longitudinally.
Longitudinal girder	A generic term for any girders arranged longitudinally.
Longitudinal hull girder structural members	Structural members that contribute to longitudinal strength.
Machinery space	The part of a ship between the aft peak bulkhead and the transverse bulkhead at the aft end of the cargo region, including the pump room, if any.
Machinery space bulkhead	A transverse bulkhead either directly forward or aft of the machinery space.
Manhole	A round or oval hole cut in a deck or tank to provide access.
Margin plate	The most outboard strake of the inner bottom; when turned down at the bilge, the margin plate (or girder) forms the outer boundary of the double bottom.
MARPOL	IMO International Convention for the Prevention of Pollution from Ships, 1973 and Protocol of 1978, as amended.
Notch	A discontinuity in a structural member caused by welding.
Outer shell	Same as shell envelope.
Pillar	A vertical support placed between decks.

Terms	Definition
Pipe tunnel	A void space running in a midships fore and aft between the inner bottom and shell plating, forming a protective space for bilge, ballast and other lines extending from the engine room to the tanks.
Plate panel	A plate surrounded by structural members such as stiffeners, primary supporting members and bulkheads. See also EPP.
Plating	A steel plate supported by stiffeners, primary supporting members, or bulkheads, exclusive of plates forming primary supporting members.
Poop	A space below an enclosed superstructure at the extreme aft end of a ship.
Poop deck	The first deck above the shelter deck at the aft end of a ship.
Primary supporting structures	Structures consisting of plating and primary supporting members that provide the overall structural integrity of the hull envelope, cargo holds, and tank boundaries. For example: Double bottom structures (bottom shell plating, inner bottom plating, centreline girders, side girders and floors) Double side structures (side shell, longitudinal bulkheads, side stringers and transverse girders) Bulkhead structures Deck structures and cross deck structures
Primary supporting members (*PSM*)	Supporting members that provide the overall structural integrity of the hull envelope, cargo holds and tank boundaries (e.g. double bottom floors and girders, transverse side structures, deck transverses, horizontal girders on bulkheads and vertical webs on longitudinal bulkheads).
Propeller post	The forward post of the stern frame, which is bored for the propeller shaft.
Rudder post	After post of the stern frame from which the rudder is hung.
Scallop	A hole cut into a member intersectional to the welding line to allow continuous welding of a plate seam.
Scarfing bracket	A bracket used between two offset structural items.
Scantlings	The physical dimensions of a structural item.
Scupper	Any opening for carrying off water from a deck, either directly or through piping.
Shedder plates	Slanted plates fitted to minimise pocketing of residual cargo in way of corrugated bulkheads.
Sheer strake	The top strake of a ship's side shell plating.
Shelf plate	A horizontal plate located on the top or bottom of a bulkhead stool.
Shell envelope plating	Shell plating forming an effective hull girder, exclusive of the strength deck plating.
Side frame (Hold frame)	A vertical member attached to the inside of the side shell.
Side girder	A longitudinal girder running through the inside of a double bottom.
Side longitudinal	A frame arranged longitudinally on the inside of the side shell.

Terms	Definition
Side shell	The shell envelope plating forming the side portion of the shell envelope above the bilge plating.
Side stringer	A horizontal girder running through the inside of the side shell.
Skylight	A deck opening fitted with or without a glass port light and serving as a ventilator for the engine room and other spaces.
Slop tank	A tank in an oil tanker that is used to collect the oil and water mixtures from cargo tanks after tank washing.
SOLAS	IMO International Convention for the Safety of Life at Sea, 1974, as amended.
Spaces	Separate compartments including tanks.
Stay	Bulwark and hatch coaming brackets.
Stem	A bar or plating at which a ship's outside plating terminates at the forward end.
Stern	The aft end of a vessel.
Stern frame	Heavy strength members attached to the after end of the hull to form a ship's stern. Includes the rudder post, propeller post and aperture for the propeller.
Stern tube	A tube through which the propellor shaft (or stern tube shaft) passes to the propeller, acts as an after bearing for the shafting and may be (sea)water or oil lubricated.
Stiffener	A collective term for secondary supporting structural members.
Stool	A structure supporting the top or bottom of a tank bulkhead.
Strake	A course or row of a shell, deck, bulkhead, or other plating.
Strength deck	The uppermost continuous deck.
Stringer	A horizontal girder linking vertical web frames.
Stringer plate	(Closest to) the outside strake of deck plating.
Strut	**A supporting member for connecting the upper and bottom stiffeners in a double bottom, mutually opposing girders in a tank, or the like.**
Superstructure	**A decked structure on the freeboard deck extending either from side to side of a ship or side plating located not more than 0.04*B* inboard of the shell plating.**
SWL	*Safe working load*.
Tank	A space intended to carry a liquid such as seawater, fresh water, oil, liquid cargo, fuel oil, or lubricating oil.
Tank top	Horizontal plating forming the top of a tank.
Towing pennant	A long rope used to tow a ship.
Topside tank	A tank that normally extends in the lengthwise direction of a ship's side and occupies the upper corners of the cargo hold in bulk carriers, etc.
Transom	The structural arrangement and form of the aft end of a ship.

Terms	Definition
Transverse bulkhead	A bulkhead placed in the transverse direction of a ship.
Transverse framing system	A mode of construction in which frames are arranged transversely.
Transverse girder	A generic term for any girders arranged transversely.
Transverse ring	All transverse material appearing in a cross section of a ship's hull in the way of a floor, vertical web on a longitudinal bulkhead, or deck transverse girder.
Transverse web frame	The primary transverse girders that join a ship's longitudinal structure.
Tripping bracket	A bracket used to prevent a girder, web, or similar object from falling sideways.
Trunk	A decked structure similar to a deckhouse but not provided with a lower deck.
Tween deck	A deck placed between the upper deck and the inner bottom plating in a cargo hold.
Ullage	The distance from the datum line of an ullage opening cut in the deck to the liquid level inside a tank.
Upper Deck	The uppermost continuous deck forming the main part of a hull.
Vertical web	A primary supporting member fitted vertically to a bulkhead.
Void	An enclosed empty space in a ship.
Wash bulkhead	A perforated or partial bulkhead in a tank.
Watertight	A watertight means capable of preventing the passage of water through a structure under the head of water for which the surrounding structure is designed.
Weather deck (Exposed deck)	A deck or section of deck exposed to the elements that has a means of closing weathertight all hatches and openings (attached thereto).
Weathertight	Weathertight means that in any sea conditions water will not penetrate into the ship.
Web	The section of a stiffening member attached perpendicular to the plated surface.
Wind and water strakes	The strakes of a ship's side shell plating between the ballast and the deepest load waterline.
Windlass	A winch for lifting and lowering the anchor chain.
Wing tank	The space bounded by the inner hull longitudinal bulkhead and side shell.

1.4.5 Naming Convention

1.4.5.1 Structural Nomenclature

Fig. 1.4.5-1 to **Fig. 1.4.5-9** show the common structural nomenclature used in **Part C**.

Fig. 1.4.5-1 Container Carrier

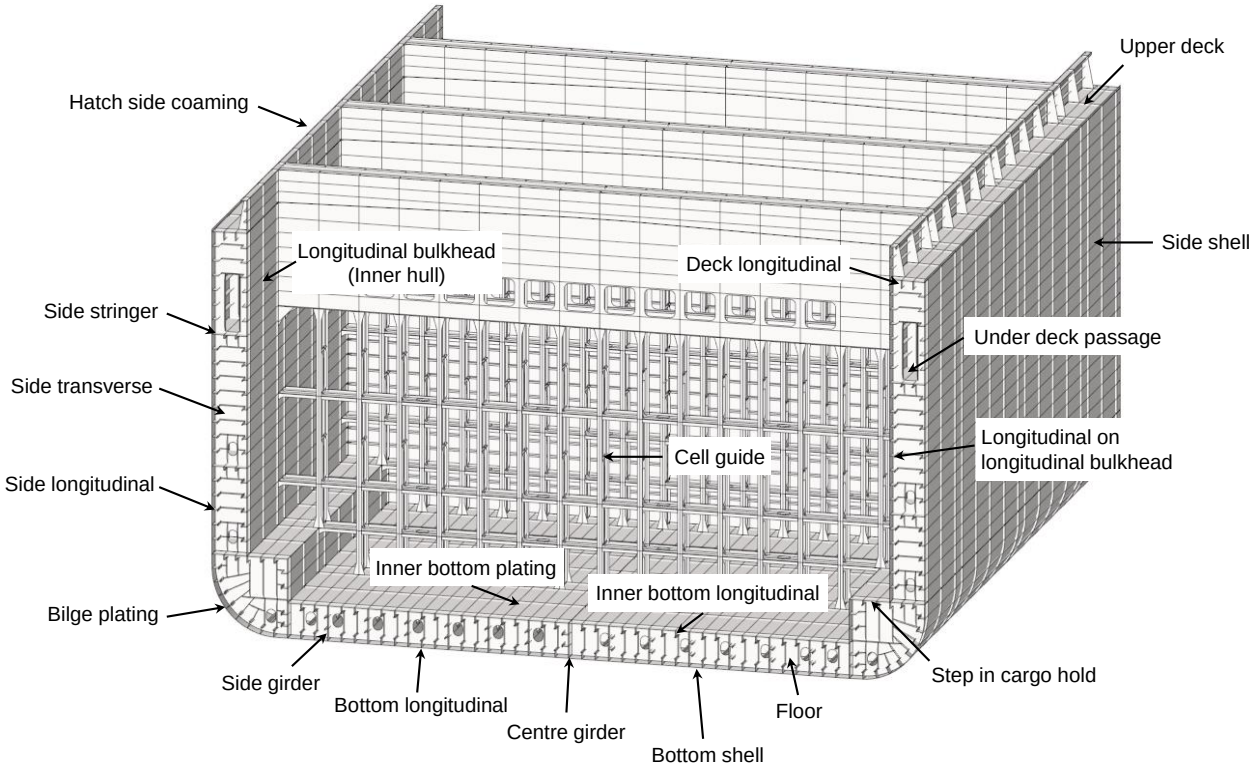

Fig. 1.4.5-2 Bulk Cargo Ship with Box-Shaped Holds

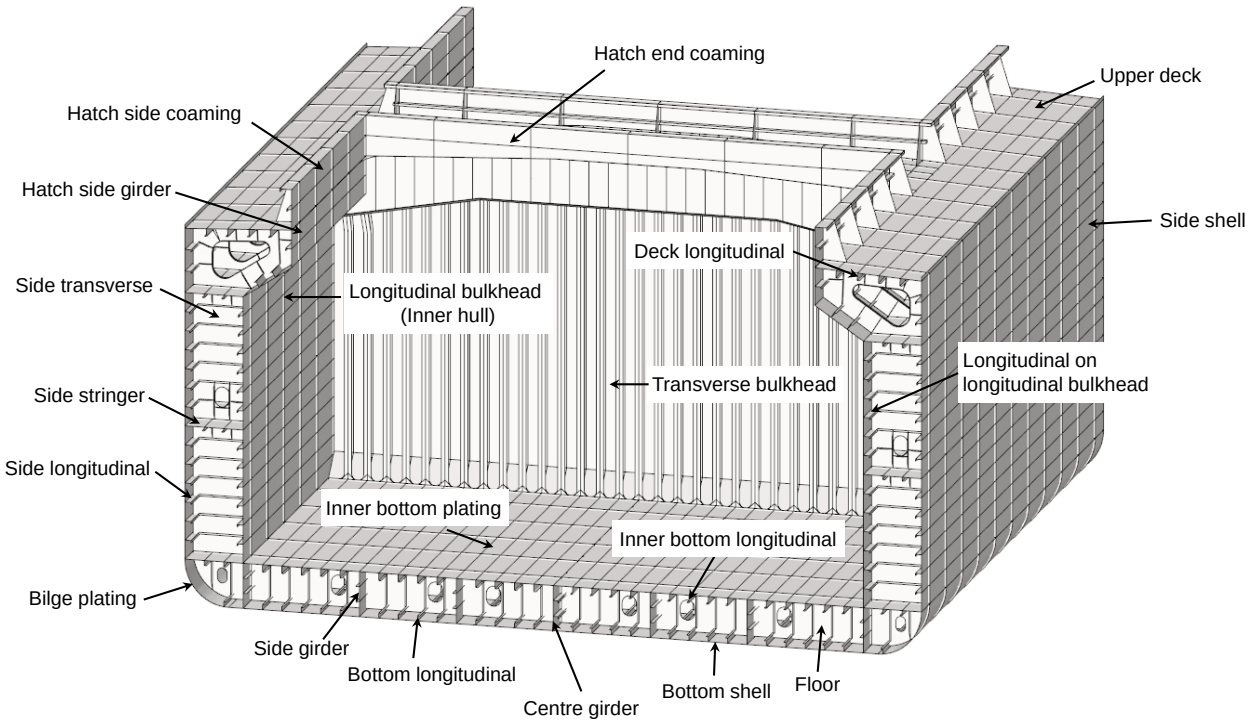

Fig. 1.4.5-3 Ore Carrier

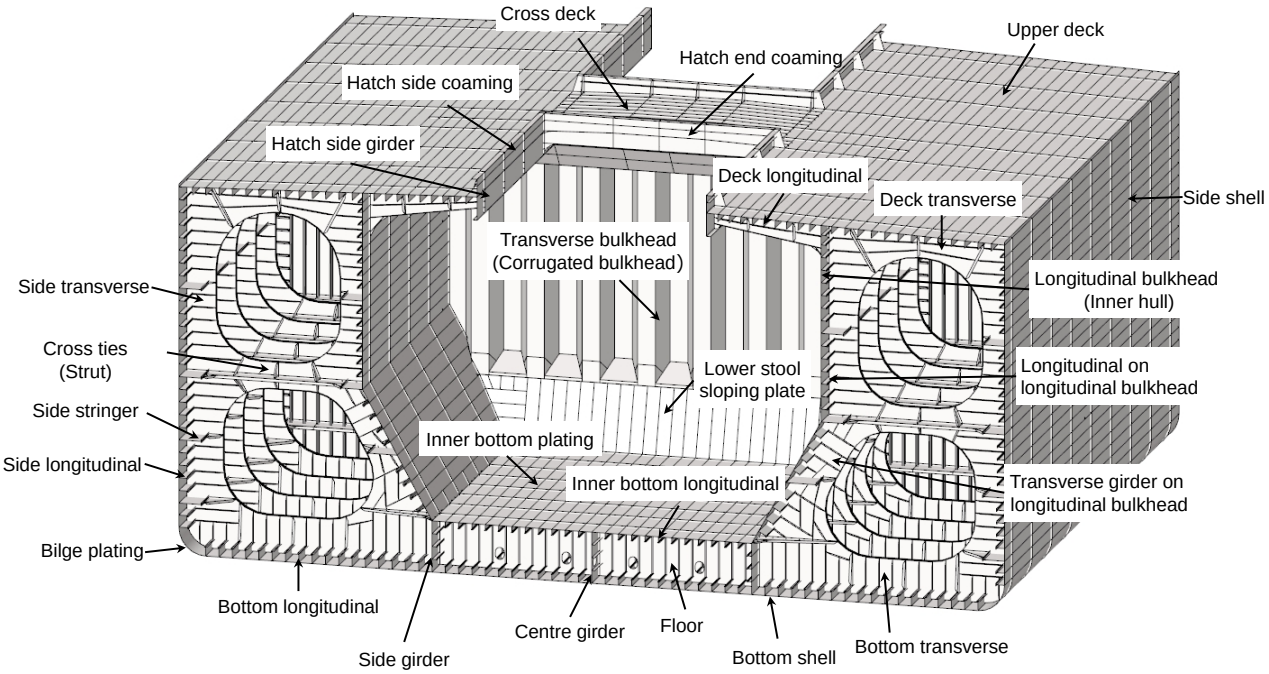

Fig. 1.4.5-4 Wood Chip Carrier

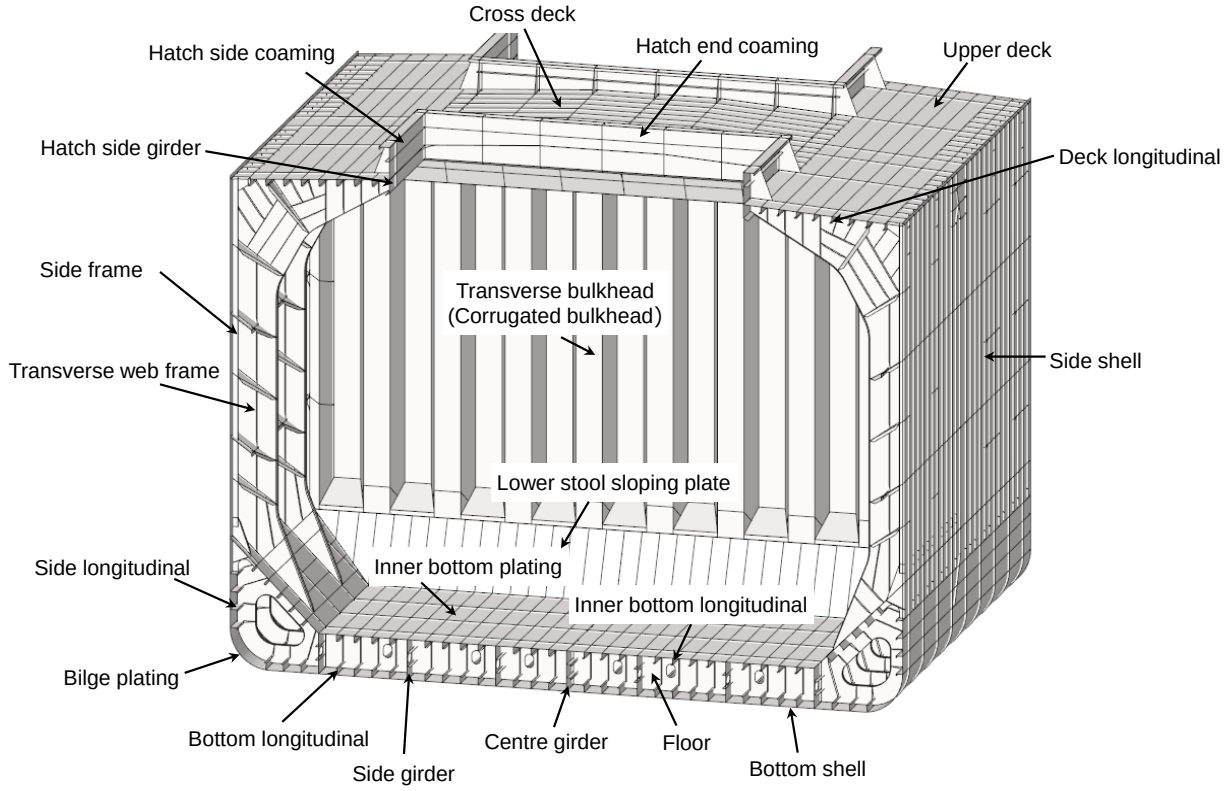

Fig. 1.4.5-5 General Cargo Ship

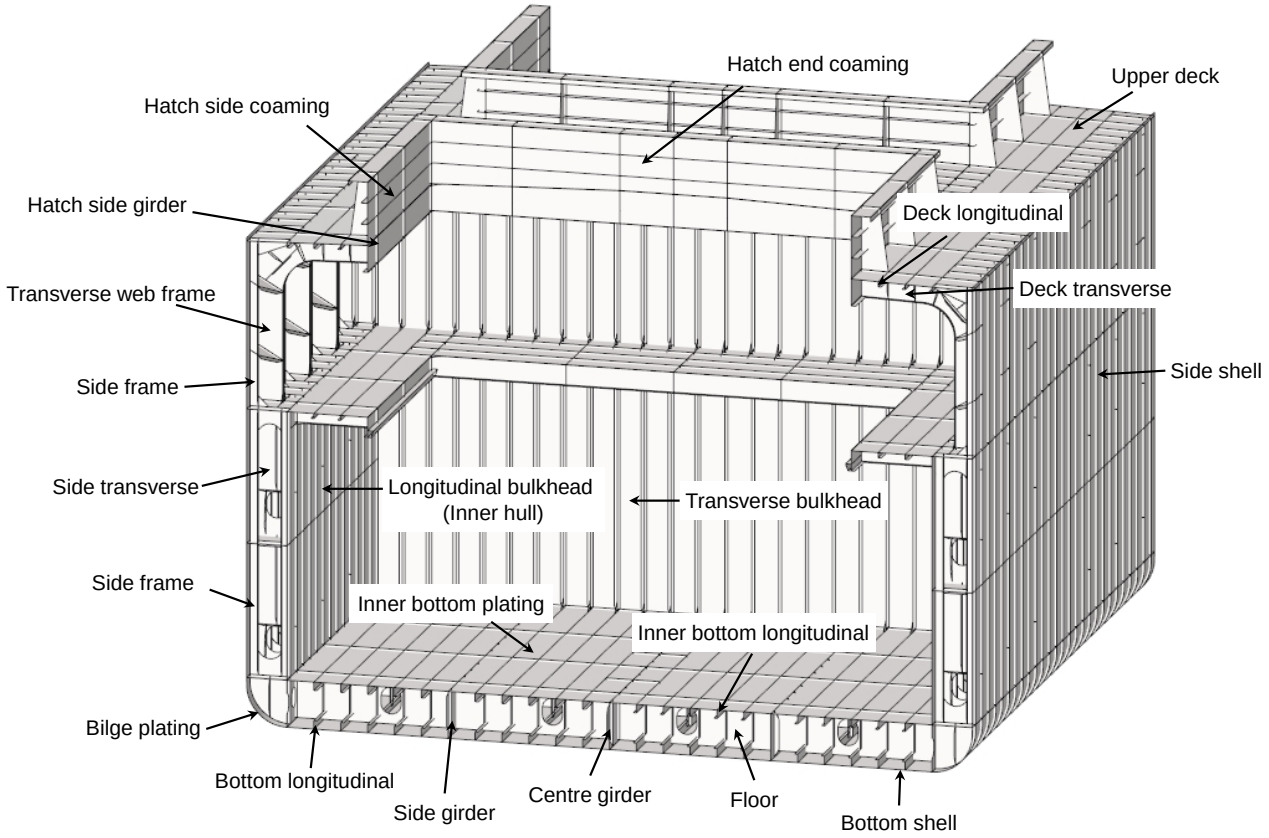

Fig. 1.4.5-6 Refrigerated Cargo Ship

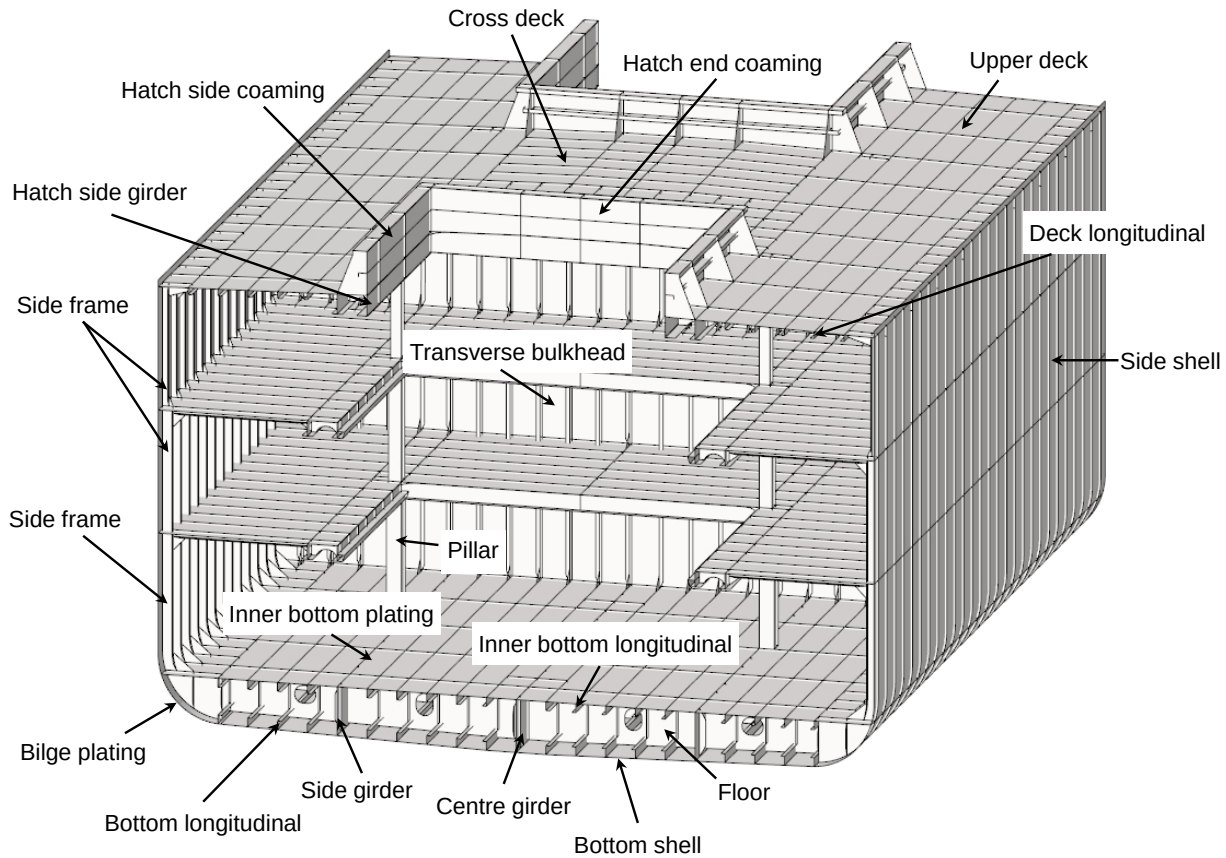

Fig. 1.4.5-7 Car Carrier

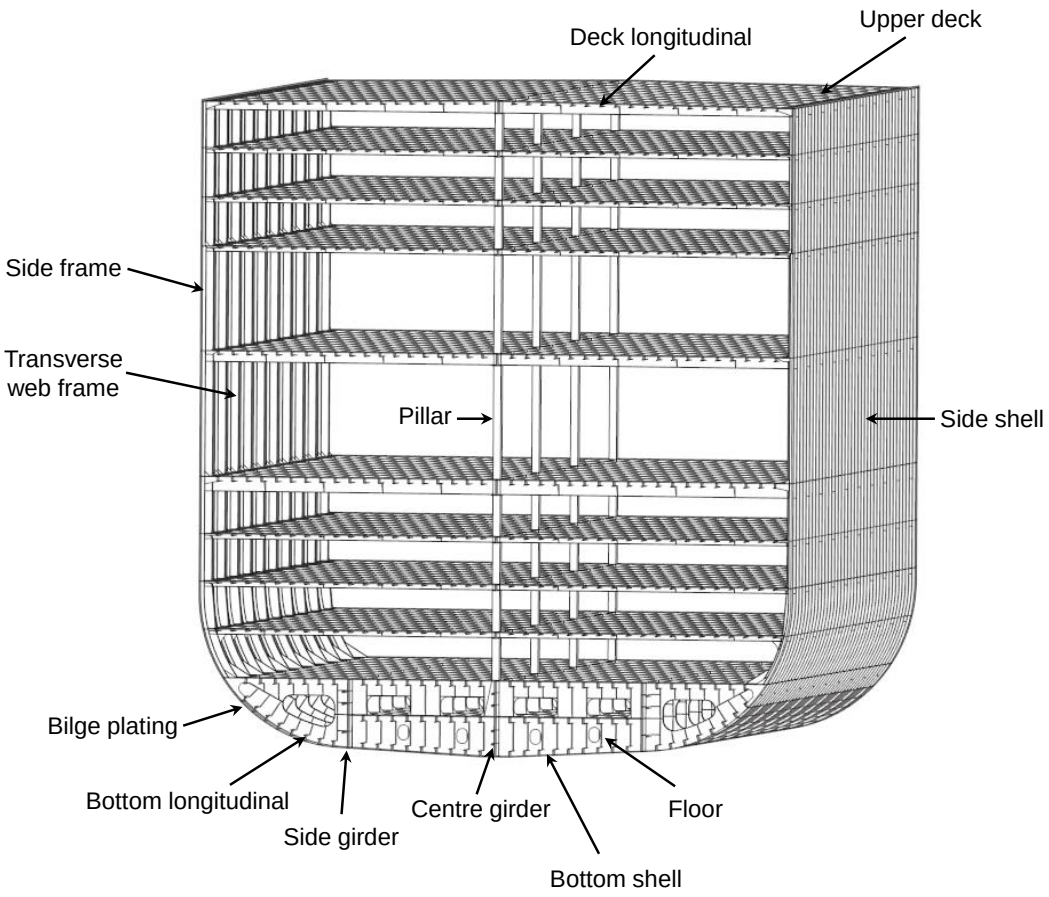

Fig. 1.4.5-8 Tanker

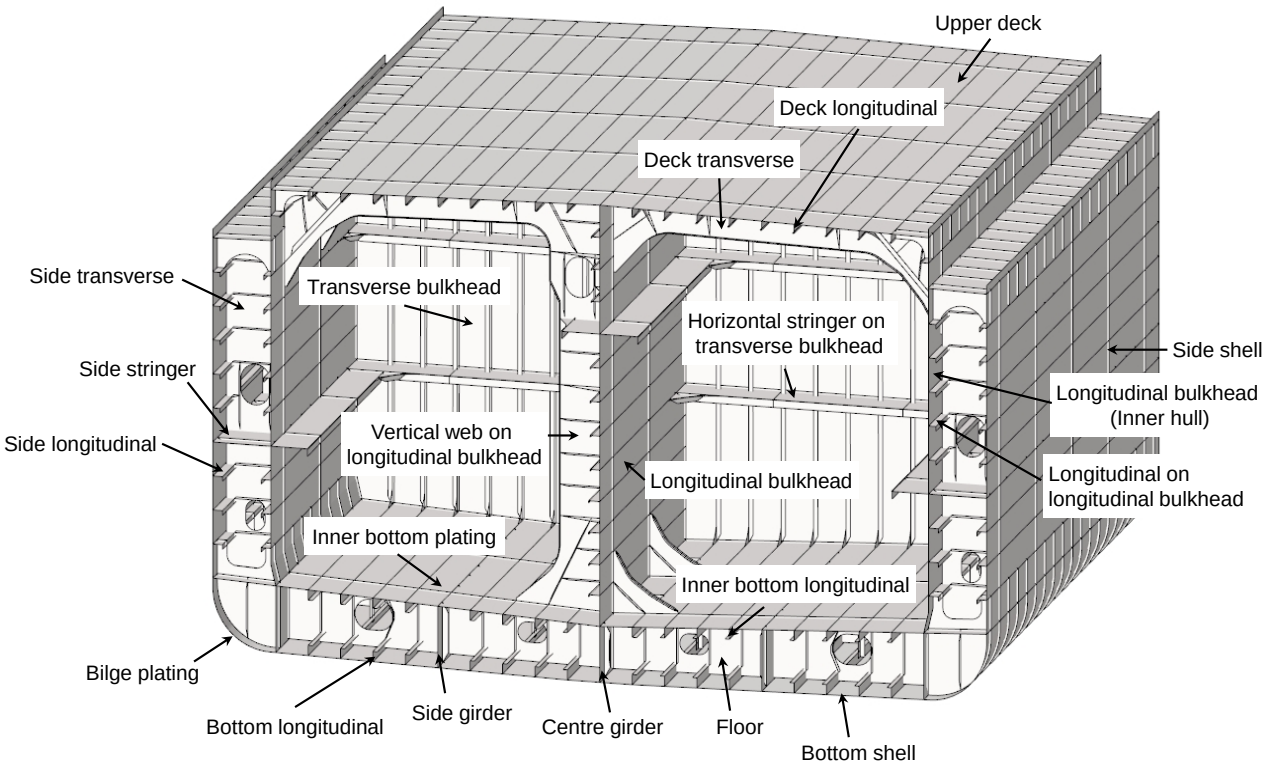

Fig. 1.4.5-9 Chemical Tanker

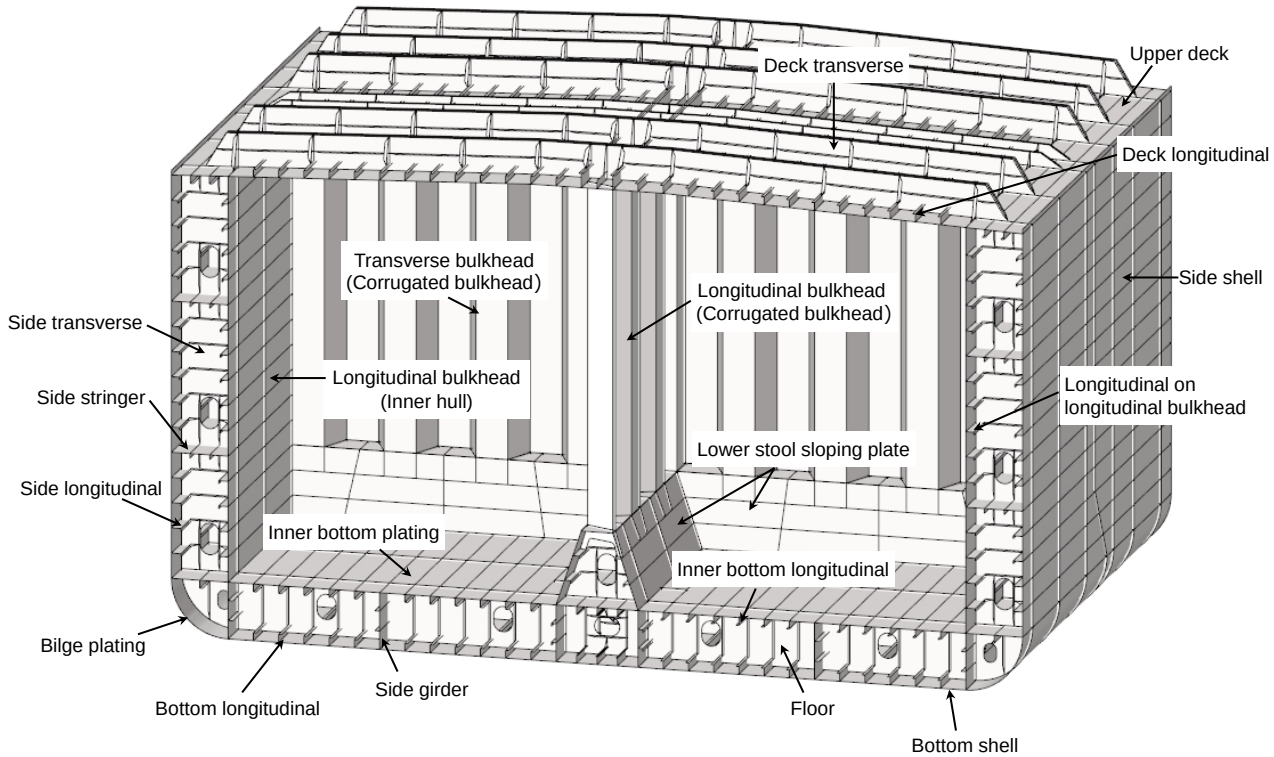

1.5 Plans and Documents To Be Submitted

1.5.1 General

1.5.1.1

1 For ships to be built under classification survey, prior to the commencement of shipbuilding, plans and documents specified in **2.1.3, Part B** are to be submitted to the Society.

2 In addition to **-1** above, when a finite element analysis is carried out in the application of **Part C**, a report containing the following detailed information is to be submitted to the Society:

(1) Documents describing the analysis procedures

(a) Detailed description of the structural modelling, including all modelling assumptions.

(b) Any deviations in the geometry and arrangement of the structure compared with plans.

(c) Name and version of the analysis system used, such as a finite element analysis program.

(d) Details of the boundary conditions.

(e) Distributions of shearing force, bending moment, and torsional moment and the details of the load conditions used for their calculation.

(f) Documents showing details of the applied loads and confirmation of their correctness.

(2) Documents containing the analysis results

(a) Plots and results that demonstrate the correct behaviour of the structural model under the applied loads.

(b) Summaries and plots of global and local deflections.

(c) Summaries and sufficient plots of stresses to demonstrate that the strength criteria are not exceeded in any member.

(d) Summaries and sufficient plots to demonstrate that the buckling criteria are not exceeded in any of plating and stiffening members.

(e) Summaries and sufficient plots to demonstrate that the fatigue criteria are not exceeded in any discontinuous structure.

(3) Documents separately specified in **Part 2**

(4) Where any advanced analysis is required, documents specified in the **"Guidelines for Direct Load Analysis and Strength**

Assessment”.

Annex 1.1 SPECIAL REQUIREMENTS FOR RESTRICTED SERVICE

An1 General

An1.1 Wave Loads in Restricted Service

An1.1.1 General

This Annex specifies the requirements of wave loads to be considered for ships to which 1.2.2, Part A is applied in maximum load condition. Notwithstanding the requirements in this Annex, the **"Guidelines for Direct Load Analysis and Strength Assessment"** issued separately by the Society may be applied, and wave loads based on the data of sea state, etc. of the intended service area may be used.

An1.1.2 Application

Wave loads to which the requirements in this Annex are applicable are to be in accordance with Table An1.

Table An1 Applicable Wave Loads for Restricted Service

Applicable to	Relevant rules
Vertical wave induced bending moment	4.3.2.3, 4.4.2.9-1 and 4.6.2.10
Vertical wave induced shear force	4.3.2.4
Wave induced horizontal bending moment	4.3.2.6, 4.4.2.9-2 and 4.6.2.10
Wave induced torsional moment	4.3.2.6
Hydrodynamic pressure	4.4.2.3-2 and 4.6.2.4-2
Dynamic pressure, Dynamic load, etc.	4.4.2.4-2, 4.4.2.5-2, 4.4.2.6, 4.4.2.7-2, 4.6.2.5-2, 4.6.2.6-2, 4.6.2.7-2, 4.6.2.8 and 4.6.2.9
Notes: (1) For ships where the wave loads specified in Part 2 are applied, the requirements in this table may be applied.	

An1.1.3 Wave Loads in Coastal Area

For ships subject to 1.2.2(1), Part A (ships for service in coastal area), values multiplying the wave loads shown in Table An1 by 2/3 are to be used.

An1.1.4 Wave Loads in Calm Water Area

For ships subject to 1.2.2(2), Part A (ships for service in calm water area), values multiplying the wave loads shown in Table An1 by 1/3 are to be used.

An1.1.5 Others

For ships subject to 1.2.2(3) and (4), Part A, the **"Guidelines for Direct Load Analysis and Strength Assessment"** are to be followed with necessary modifications when specifying wave loads based on oceanographic and other data for the intended service area. However, direct load analysis may be omitted, provided that proper study materials are submitted and deemed appropriate by the Society.

An1.2 Impact Loads in Restricted Service

An1.2.1 General

Scantlings of members obtained from the requirements of bottom slamming (4.8.2.2), bow impact (4.8.2.3) and green sea loads (4.4.2.8, 4.9.2.2, 4.9.2.3) may be decreased based on the ratio specified in Table An2. However, the scantlings are not to be less than

the minimum thickness.

Table An2 Scantling Deduction and Minimum Scantling

Items		Coasting	Smooth Water	Minimum thickness
Green sea loads	Minimum thickness of decks	1 *mm*	1 *mm*	5 *mm*
	Section modulus of beams	15 %	15 %	-
	Section modulus of deck girders	15 %	15 %	-
	Thickness of plate and section modulus of stiffeners of superstructure end bulkhead	10 %	10 %	-
Bottom slamming and bow impact	Outer shell	5 %	10 %	6 *mm*
	Section modulus of stiffeners attached to outer shell	10 %	20 %	30 cm^3
	Thickness of members forming double bottom structures	1 *mm*	1 *mm*	5.5 *mm*
	Thickness of members forming single bottom structure	0.5 *mm*	10 % or 1 *mm*, whichever is smaller	-
Notes: For ships engaged in international voyages, the thickness of the superstructure end bulkhead and the cross section modulus of stiffeners are not to be reduced.				

An1.3 Other Requirements in Restricted Service

An1.3.1 General

1 Reduction of scantlings of members and Equipment of ships to be classed for *Coasting Service*

(1) Heights of hatchway coamings, sills of doors, etc. may be reduced to the heights specified in **Table An3**.

(2) The design pressure of the rectangular windows specified in **14.11.1.4**, including the minimum design pressure specified in **Table 14.11.1-1**, may be reduced by 10 %.

(3) Anchors, chains, towing and mooring arrangements, as well as equipment number and emergency towing arrangements are to be in accordance with the requirements of **Chapter 23, Part CS**.

(4) Notwithstanding the provision in **(3)** above, the mass of one of the two anchors may be reduced to 85 % of the mass required in the **Table CS23.1, Part CS**.

(5) The design pressure P_e for the doors specified in **14.10.1.4-1** and **Table 14.10.2-2** may be reduced to 80 %.

(6) Ships not engaged on international voyages need not apply the requirements of **14.13.2.1-2**.

(7) Ships not engaged on international voyages need not apply the requirements of **14.5.3.1**.

(8) Ships not engaged on international voyages need not apply the requirements of **3.3.5.2-2**, **3.8.2.3** and **Annex 1.1, Chapter 1, Part 2-2 "Additional Requirements for Bulk Carriers in Chapter XII of the SOLAS Convention"**.

(9) Ships not engaged on international voyages need not apply the requirements of **14.16.3**.

2 Reduction of scantlings of members and equipment of ships to be classed for *Smooth Water Service*

(1) Heights of hatchway coamings, sills of doors, etc. may be reduced to the heights specified in **Table An3**.

(2) The hatchway covers may be of a shelter type.

(3) The thicknesses of steel hatchway covers, on which cargoes are not carried, may be 4.5 *mm*.

(4) Stiffeners are to be provided at suitable intervals for steel hatchway covers, and the section modulus of stiffeners, on which cargoes are not carried, may be reduced from the value obtained from the formula in **19.2.6-2, Part CS**.

(5) The design pressure of rectangular windows specified in **14.11.1.4**, including minimum design pressure specified in **Table 14.11.1-1** may be reduced by 10 %.

(6) Equipment is to be accordance with the requirements in **-1(3)** and **(4)**. However, the equipment letter in **Table CS23.1, Part CS** may be downgraded one rank from the requirements in **23.1.2, Part CS**.

(7) The design pressure P_e for the doors specified in **14.10.1.4-1** and **Table 14.10.2-2** may be reduced to 50 %.

(8) Ships not engaged on international voyages need not apply the requirements of **14.13.2.1-2**.

(9) Ships not engaged on international voyages need not apply the requirements of **14.5.3.1**.

(10) Ships not engaged on international voyages need not apply the requirements of **3.3.5.2-2**, **3.8.2.3** and **Annex 1.1, Chapter 1, Part 2-2** **"Additional Requirements for Bulk Carriers, Chapter XII of the SOLAS Convention"**.

(11) Ships not engaged on international voyages need not apply the requirements of **14.16.3**.

3 For ships not engaged on international voyages and not specified in **-1** and **-2** above, where deemed appropriate by the Society taking account of various conditions of such ships related to navigation, the requirements of **3.8.2.3** need not be applied.

4 Ships not engaged on international voyages need not apply the requirements of **3.3.5.2-2** and **3.8.2.3**.

5 The bulk carriers defined in **1.3.1(13), Part B** not engaged on international voyages need not apply the requirements of **14.16.3**.

6 Ships not engaged on international voyages need not apply the requirements of **14.4** (excluding **14.4.2.1** and **14.4.3.2**).

7 Ships not engaged on international voyages need not apply the requirements of **14.5.3**.

Table An3 Heights of Hatchway Coamings, Sills of Doors, etc. (*mm*)

Service Area	Position of Hatchways, etc.	Kind of Hatchways, etc.				
		[A]	[B]	[C]	[D]	[E]
Coasting	I	600	450	450	380	900
	II	450	380	300	300	760
Smooth Water	I	450	380	300	300	760
	II	300	230	100	100	450

Where,

[A]＝General hatchways

[B]＝Small hatchways, the area of which is not bigger than 1.5 m^2

[C]＝Companionways

[D]＝Doors of superstructure end bulkheads

[E]＝Ventilators

Chapter 2 GENERAL ARRANGEMENT DESIGN

2.1 General

2.1.1 Overview

2.1.1.1

This Chapter specifies the requirements shown in Table 2.1.1-1 as the general requirements for the structural configuration.

Table 2.1.1-1 Overview of Chapter 2

Section	Title	Overview
2.1	General	Overview of this Chapter
2.2	Subdivision Arrangement	Requirements for bulkhead arrangement and watertight doors provided in watertight bulkheads
2.3	Damage Stability	Requirements for damage stability
2.4	Structural Arrangement	Requirements for the arrangements of structures, such as double bottom structures

2.2 Subdivision Arrangement

2.2.1 Arrangement of Watertight Bulkheads

2.2.1.1 Collision Bulkheads

1 All ships are to have a collision bulkhead at a position not less than 0.05 L_f or 10 m, whichever is less, from the forward terminal of the freeboard length, but not more than 0.08 L_f or 0.05 L_f + 3.0 (m), whichever is greater, unless for special structural reasons which are approved by the Society. (*See* Fig. 2.2.1-1)

2 Where any part of the ship below the waterline at 85 % of the least moulded depth extends forward beyond the forward terminal of the freeboard length, the distance specified in **-1** above is to be measured from the point that gives the smallest measurement from the following:

(1) The mid-length of such an extension

(2) A distance 0.015 L_f forward from the above-mentioned forward terminal

(3) A distance 3 m forward from the forward terminal

3 "Special structural reasons that are approved by the Society" as specified in **-1** above are reasons approved on the basis that an application is submitted together with calculations verifying that no part of the bulkhead deck will be immersed even when the compartment forward of the collision bulkhead is flooded under loaded conditions (without trim) corresponding to the load line.

4 The bulkhead may have steps or recesses within the limits specified in **-1** above. (*See* Fig. 2.2.1-2)

5 Any access openings, doors, manholes or ducts for ventilation, etc. are not to be cut into the collision bulkhead below the freeboard deck. Where a collision bulkhead extends up to a deck above the freeboard deck in accordance with the requirements of 2.2.1.5(2), the number of openings in the extension of the collision bulkhead is to be kept to the necessary minimum and all such openings are to be provided with weathertight means of closing.

6 In ships with bow doors, the collision bulkhead under the deck just above the freeboard deck is to comply with the requirements mentioned in **-1** and **-4** above and 2.2.1.5(2). However, where a sloping ramp forms a part of the collision bulkhead above the freeboard deck, the part of the ramp that is more than 2.3 m above the freeboard deck may extend forward of the limit specified in **-1** above. In this case, the ramp is to be weathertight over its complete length. However, ramps not meeting the above requirement are not to be regarded as an extension of the collision bulkhead.

7 The probability of survival (s_i) calculated in accordance with requirements in 2.3.2.3 is not to be less than 1 at the deepest

subdivision draught load condition, level trim or any forward trim load conditions, if any part of the ship forward of the collision bulkhead is flooded without vertical limits.

Fig. 2.2.1-1

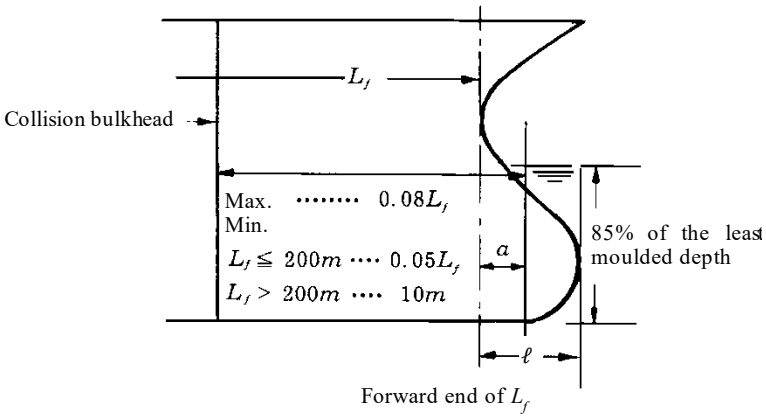

(Notes)

a: Lesser of the following:

(1) $\frac{\ell}{2}$ (m)

(2) $0.015L_f$ (m) for $L_f \leq 200\ m$

$3.0\ m$ for $L_f > 200\ m$

Fig. 2.2.1-2

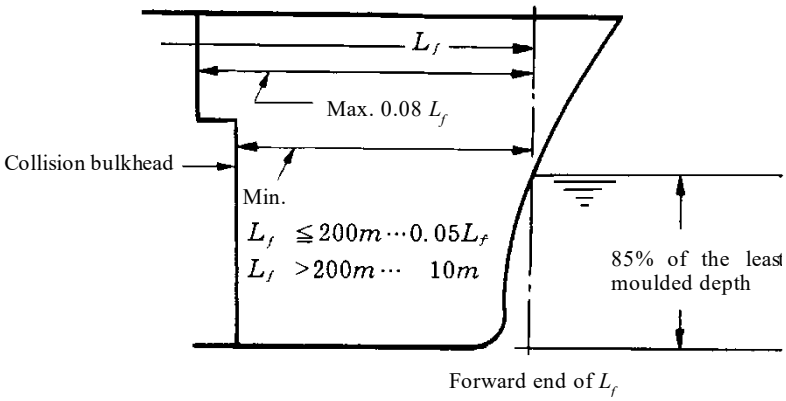

2.2.1.2 Aft Peak Bulkheads

1 All ships are to have an aft peak bulkhead situated at a suitable position.

2 The stern tube is to be enclosed in a watertight compartment by the aft peak bulkhead or other suitable arrangements. Measures to minimise the danger of water penetrating into the ship in case of damage to the stern tube arrangements are to be taken.

2.2.1.3 Machinery Space Bulkheads

A watertight bulkhead is to be provided at each end of the machinery space. However, the bulkhead at the aft end of the machinery space may be the aft peak bulkhead.

2.2.1.4 Hold Bulkheads

1 For ships in the following **(1)** to **(4)** to satisfy the applicable damage stability requirements, watertight hold bulkheads are to be fitted at reasonable intervals, in addition to the watertight bulkheads specified in **2.2.1.1** to **2.2.1.3**:

(1) Ships complying with the requirements in **2.3** (including ships specified in **2.3.1.1(1)** to **(3)**)

(2) Tankers in compliance with the requirements of **3.2.2, Part 3 of the Rules for Marine Pollution Prevention Systems**

(3) Ships carrying liquefied gases in bulk or ships carrying dangerous chemicals in bulk

(4) Ships in compliance with the requirements in **An2.1, Annex 1.1, Part 2-2 "Additional Requirements for Bulk Carriers under SOLAS Chapter XII"**

2 Ships other than those listed in **-1** above are to have watertight hold bulkheads at reasonable intervals, in addition to the watertight bulkheads specified in 2.2.1.1 to 2.2.1.3, so that the total number of watertight bulkheads will be no less than that specified in Table 2.2.1-1. Where the distance between two neighbouring bulkheads is less than $0.7\sqrt{L_C}$ (m), these two bulkheads are not counted as two bulkheads.

3 Where it is impracticable to adhere to **-2** above due to the requirements for the ship's trade, the number of hold bulkheads may be reduced in accordance with one of the following **(1)** to **(3)**, taking into account the effect of the smaller number of bulkheads on the transverse strength of the hull. Where the number of watertight bulkheads is decreased from that required according to the following **(2)**, an application for the omission of bulkheads stating the reasons for such omission is to be submitted by the shipowner to the Society:

(1) The number of bulkheads specified by the requirements of **Note (1)** or **(2)** in Table 2.2.1-1.

(2) For ships of special types, the number is in accordance with **(a)**, **(b)** or **(c)**:

(a) Ships carrying long cargoes (rails, sheet piles or similar long cargoes), train ferries and car carriers may omit one bulkhead where the required number is 5 or less, and 2 bulkheads where the required number is 6 or more.

(b) Ships having conveyor systems for handling cargoes may omit all hold bulkheads, if necessary.

(c) Ships other than those specified above are, as a rule, not regarded as special type ships.

(3) Where special consideration is given for improving the safety of ships by means such as that of a double hull, the arrangement of watertight bulkheads may be different from that required in the Rules.

Table 2.2.1-1 Number of Watertight Bulkheads

L_C (m) not less than	L_C (m) less than	Total number of watertight bulkheads
90	102	5
102	123	6
123	143	7
143	165	8
165	186	9
186	200	The number of bulkheads arranged in accordance with **Notes (1)** and **(2)**
200		The number of bulkheads arranged in accordance with **Note (2)**

(Notes)

(1) The ship has sufficient transverse strength of the hull.

(2) The final waterline does not exceed the upper surface of the bulkhead deck at the side of the ship even after any compartment, except the engine room, has been flooded under the load condition corresponding to the summer load water line. The permeability used in flooding calculations is to be in accordance with Tables 2.2.1-2 or 2.2.1-3.

Table 2.2.1-2 Permeability of Cargo Holds

Cargo hold condition	Permeability
Empty	0.95
Loaded with general cargo	0.60
Loaded with timber	0.55
Loaded with ore	0.50
Loaded with cars or containers	$0.95 - 0.35 \times \frac{V_C}{V_0}$

(Notes)

V_C: Volume (m^3) occupied by cars and/or containers

V_0: Moulded volume (m^3) of the compartment

Table 2.2.1-3 Permeability of Deep Tanks

Tank condition	Permeability
Empty	0.95
Filled	0
(Note) For spaces loaded with special kinds of cargo, a suitable permeability is used depending on the kind of cargo.	

2.2.1.5 Height of Watertight Bulkheads

The watertight bulkheads specified in 2.2.1.1 to 2.2.1.4 are to extend to the freeboard deck with the following exceptions **(1)** to **(3)**:

(1) A watertight bulkhead in way of the raised quarter or the sunken forecastle deck is to extend up to the said deck.

(2) Where a forward superstructure having openings without closing appliances leads to a space below the freeboard deck, or a long forward superstructure (with a length of no less than 0.25 L_f) is provided, the collision bulkhead is to extend up to the deck next above the freeboard deck and to be made weathertight. However, where all parts of the extension, including any part of the ramp attached to it are located within the limits specified in 2.2.1.1 and the part of the deck that forms the step is made effectively weathertight, it need not be fitted directly above the collision bulkhead.

(3) The aft peak bulkhead may terminate at a freeboard deck above the designed maximum load line, provided that this deck is made watertight to the stern of the ship.

2.2.1.6 Cofferdams

1 Oiltight cofferdams are to be provided between tanks carrying oil and those carrying fresh water, such as for personnel use or boiler feed water, to prevent the fresh water from being contaminated by oil.

2 Crew spaces and passenger spaces are not to be directly adjacent to bulkheads or tops of tanks carrying fuel oil. Such compartments are to be separated from the fuel oil tanks by cofferdams that are well ventilated and accessible. Where the top of fuel oil tanks has no opening and is coated with incombustible coverings of not less than 38 *mm* in thickness, the cofferdam between such compartments and the top of the fuel oil tanks may be omitted.

2.2.2 Watertight Door

2.2.2.1 General

1 All openings in the watertight bulkheads and the part of the deck that forms the step of the bulkheads are to be closed by watertight closing appliances (hereinafter referred to as "watertight doors"). Watertight doors are classified as follows according to their purpose and frequency of use:

(1) Watertight doors that are to be permanently closed at sea

Such doors are open in port and closed before the ship leaves port (e.g. bulkhead doors for loading/unloading). The time of opening/closing such doors is to be recorded in the log-book.

(2) Watertight doors that are to be normally closed at sea

Such doors are kept closed at sea but may be used if authorised by the officer of watch and are to be closed again immediately after use.

(3) Watertight doors that are used at sea

Kept closed but may be opened during navigation when authorised by the Administration to permit the passage of passengers or crew, or when work in the immediate vicinity of the door necessitates it being opened. The door, however, is to be immediately closed after use.

2 Watertight doors as specified in **-1** above are to be normally closed at sea, except where deemed necessary for the ship's operation by the Society. Watertight doors or ramps fitted to internally subdivided cargo regions are to be permanently closed at sea.

3 The requirements of 2.2.2 apply to watertight doors required by other regulations regarding damage stability requirements. Watertight doors located above the bulkhead deck are to also comply with the requirements for doors provided for means of escape specified in **Chapter 13, Part R**.

4 The general requirements for watertight doors are shown in **Tables 2.2.2-1** and **2.2.2-2**.

Table 2.2.2-1 Requirements for Watertight Doors for Internal Openings

Position relative to bulkhead or freeboard deck	Referenced requirement	Frequency of use at sea	Type of door	Remote closure	Open/close indicators	Audible or visual alarms	Notices	Notes
Below	**2.2.2.4-3**, **2.2.2.5**, **2.2.2.6** and **2.2.3.1-2(2)**	Used	Power-operated sliding door	Yes	Yes	Yes (Local)	No	–
	2.2.2.5, **2.2.2.8-1** and **2.2.3.1-2(3)**	Normally Closed	Sliding, rolling or hinged door	No	Yes	No	Yes	*1, *6
	2.2.2.4-8, **2.2.2.8-2** and **2.2.3.1-2(4)**	Permanently Closed (cargo regions)	Sliding, rolling or hinged door	Prohibited	No	No	Yes	*3, *4, *7
	2.2.2.8-2 and **2.2.3.1-2(5)**	Permanently Closed (others)						
At or above	**2.2.2.4-3**, **2.2.2.5**, **2.2.2.6** and **2.2.3.1-2(2)**	Used	Power-operated sliding door	Yes	Yes	Yes (Local)	No	*2, *5
	2.2.2.5, **2.2.2.8-1** and **2.2.3.1-2(3)**	Normally Closed	Sliding, rolling or hinged door	No	Yes	No	Yes	*1, *6
	2.2.2.8-2 and **2.2.3.1-2(4)**	Permanently Closed	Sliding, rolling or hinged door	Prohibited	No	No	Yes	*3, *4, *7

*1: If hinged, this door is to be of a single-action type.

*2: Under the *ICLL*, doors separating the main machinery space from a steering gear compartment may be hinged single-action types, provided that the lower sill of such doors is above the Summer Load Line and the doors remain closed at sea while not in use.

*3: The time of opening such doors in port and closing them before the ship leaves port is to be entered into the log-book in the case of doors in watertight bulkheads subdividing cargo regions.

*4: Doors are to be fitted with devices that prevent unauthorised opening.

*5: Under *MARPOL*, hinged watertight doors may be acceptable in watertight bulkheads of the superstructure.

*6: Notices are to state "*To be kept closed at sea*".

*7: Notices are to state "*Not to be opened at sea*".

Table 2.2.2-2 Requirements for Watertight Doors for External Openings

Position relative to bulkhead or freeboard deck	Referenced requirement	Frequency of use at sea	Type of door	Remote closure	Open/close indicators	Audible or visual alarms	Notices	Notes
Below	2.2.2.5, 2.2.2.8-2, 2.2.3.2-2 and 2.2.3.2-3	Permanently Closed	Sliding, rolling or hinged door	No	Yes	No	Yes	*2, *3, *5
At or above	2.2.2.5, 2.2.2.8-1 and 2.2.3.2-2	Normally Closed	Sliding, rolling or hinged door	No	Yes	No	Yes	*1, 4
	2.2.2.5, 2.2.2.8-2 and 2.2.3.2-2	Permanently Closed	Sliding, rolling or hinged door	No	Yes	No	Yes	*2, *3, *5

*1: If hinged, this door is to be of a single-action type.
*2: The time of opening such doors in port and closing them before the ship leaves port is to be entered into the log-book.
*3: Doors are to be fitted with devices that prevent unauthorised opening.
*4: Notices are to state "*To be kept closed at sea*".
*5: Notices are to state "*Not to be opened at sea*".

2.2.2.2 Types of Watertight Doors

1 Watertight doors are to be of a sliding type.

2 Notwithstanding the requirements **-1** above, watertight doors provided at small access openings, which are approved by the Society, may be of a hinged type or rolling type, except where the doors are required to be capable of being operated remotely by the requirements for crew use may be of a hinged type or rolling type unless required by the provision of 2.2.2.4-3.

3 Notwithstanding the requirements **-1** above, watertight doors or ramps fitted to internally subdivided cargo regions may be of a type other than the sliding type.

4 Doors that are closed by dropping or by the action of a dropping weight are not permitted.

2.2.2.3 Strength and Watertightness

1 Watertight doors are to be of ample strength and watertightness for water pressure to a head up to the bulkhead deck and door frames are to be effectively secured to the bulkheads. In cases other than the following **(1)** to **(3)**, watertight doors are to be tested by water pressure before they are fitted:

(1) The prototype of such watertight doors has been tested by design water pressure.

(2) The design of such doors has been verified to have enough strength and watertightness by direct structural analysis. Where watertight doors utilise gasket seals, a prototype pressure test to confirm that the compression of the gasket material is capable of accommodating any deflection is to be carried out.

(3) Such doors are compliant with *JIS* F 2314 or a standard deemed appropriate by the Society.

2 Where hydraulic tests are carried out as specified in **-1** above, the following are to be complied with:

(1) The head of water used for the hydraulic test is to correspond at least to the head measured from the lower edge of the door opening (at the location in which the door is to be fitted in the ship) to 1 *m* above the freeboard deck. However, for watertight doors subject to 2.2.3.1 and 2.2.3.2, the head is not to be less than the height of the final damage waterline or the intermediate waterline, whichever is greater.

(2) The acceptable leakage rate at the test is not to be greater than the following values:

(a) Doors with gaskets: No leakage

(b) Doors with metallic sealing: 1 *l/min*

(3) Notwithstanding **(2)** above, the following leakage rate may be accepted for hydraulic tests on large doors located in cargo regions employing gasket seals or guillotine doors located in conveyor tunnels:

(a) For doors of the design head exceeding 6.10 *m*:

$$\frac{(P+4.572)\cdot h^3}{6568}\ (l/min)$$

P: Perimeter of door opening (m)

h: Test head of water (m)

(b) For doors with a design head not exceeding 6.10 *m*, the acceptable leakage rate is the value calculated by the formula specified in **(a)** above or 0.375 *l/min*, whichever is greater.

3 Where watertight doors are provided in cargo regions, such doors are to be protected by suitable means against damage from items such as cargoes.

2.2.2.4 Control

1 All watertight doors, except those that are to be permanently closed at sea, are to be capable of being opened and closed by hand locally, from both sides of the doors, with the ship listed 30 degrees to either side. Their operation capability with the ship listed at 30 degrees to either side is to be verified by tests such as the prototype test.

2 In applying **-1** above, power operated doors are also to be capable of being opened and closed by power, in addition to by hand.

3 In addition to the requirements of **-1** above, watertight doors that are used at sea or are normally open at sea are to be capable of being remotely closed by power from the bridge. The "bridge" meant here refers to the place where the watch officer is always present and normally implies the navigation bridge deckhouse.

4 Where it is necessary to start the power unit for remote operation of the watertight door required by **-3** above, means to start the power unit is also to be provided at remote control stations.

5 Remote controls required by **-3** above are to be in accordance with the following:

(1) The operating console at the bridge is to have a "master mode" switch with the following two modes of control. This switch is normally to be in the "local control" mode. The "doors closed" mode is only used in an emergency or for testing purposes. Special consideration is to be given to the reliability of the "master mode" switch.

(a) "Local control" mode

This mode is to allow any door to be locally opened and locally closed after use without automatic closure.

(b) "Doors closed" mode

This mode is to permit doors to be opened locally and automatically re-close the doors upon release of the local control mechanism.

(2) The operating console at the bridge is to be provided with a diagram showing the location of each door, with visual indicators to show whether each door is open or closed. A red light is to indicate that a door is fully open and a green light is to indicate that a door is fully closed. When the door is closed remotely, the red light is to indicate the intermediate position by flashing. The indicating circuit is to be independent of the control circuit for each door.

6 Where remote control is required by **-3** above, signboards/instructions are to be placed in way of the door advising how to act when the door is in the "doors closed" mode mentioned in **-5** above.

7 Where a watertight door is located adjacent to a fire door, both doors are to be capable of independent operation, remotely if required and from both sides of each door.

8 Watertight doors are not to be able to be opened remotely. In addition, watertight doors complying with the requirements of **2.2.2.2-3** are not to be remotely controlled.

2.2.2.5 Indication

1 Watertight doors are to be provided with position indicators the bridge and at all operating positions showing whether the doors are open or closed, unless such doors are "watertight doors or ramps fitted to internally subdivided cargo region" as stated in **2.2.3.1-2(4)**. "Position indicators on the bridge showing whether the doors are open or closed" are to be in accordance with **2.2.2.4-5(2)**.

2 For watertight doors with dogs/cleats for securing watertightness, position indicators are to be provided to show whether all dogs/cleats are fully and properly engaged or not.

3 Where it is easy to confirm on either side of doors whether they are open or closed and, if **-2** above is applicable, whether all dogs/cleats are fully and properly engaged, a position indicator need not be provided for such doors.

4 The door position indicating system is to be of a self-monitoring type, and the means for testing it are to be provided at the position where the indicators are fitted.

2.2.2.6 Alarms

1 Failure of the normal power supply of alarms required to be installed by **2.2.2.6** is to be indicated by an audible and visual alarm. This alarm is to be located on the bridge.

2 Watertight doors that are capable of being remotely closed are to be provided with an audible alarm that will sound at the door position whenever such doors are remotely closed.

3 An audible alarm required by **-2** above is to have a sound distinctive from any other alarms in the area, which will sound whenever the door is remotely closed.

4 All watertight doors (including sliding doors) operated by hydraulic door actuators, irrespective of whether their control positions are a central hydraulic unit or local operating position, are to be provided with either a low fluid level alarm, a low gas pressure alarm or some other means as applicable for monitoring the loss of stored energy in the hydraulic accumulators. Such alarms are to be both audible and visible and located on the bridge.

2.2.2.7 Source of Power

1 The remote controls, indications and alarms required in **2.2.2.4** to **2.2.2.6** are to be operable in the event of main power failure.

2 Electrical installations for devices specified in **-1** above, except those of a water-proof type approved by the Society, are not to be under the freeboard deck. "Electrical installations" meant here refer to electrical motors for opening and closing the doors and their control components, indicators that show whether the doors are opened or closed, audible alarms, limit switches for ensuring the door position and their associated cables.

3 Cables for devices specified in **-1** above are to comply with the requirements of **2.9.11-2, Part H**.

2.2.2.8 Notices

1 Watertight doors that are to be normally closed at sea but not provided with a means of remote closure are to have notices fixed to both sides of the doors stating, "To be kept closed at sea".

2 Watertight doors that are to be permanently closed at sea are to have notices fixed to both sides of the door stating, "Not to be opened at sea". Such doors accessible during the voyage, a device that prevents unauthorised opening is to be provided, such as a lock that prevents access to the closing and/or operating apparatus.

2.2.2.9 Sliding Doors

1 Where a sliding watertight door is operated by rods, the lead of the operating rods is to be as direct as possible and the screw is to work in a nut of brass or other approved materials.

2 The frames of vertically sliding watertight doors are not to have a groove at the bottom in which dirt might lodge and prevent the door from closing.

2.2.2.10 Hinged Doors and Rolling Doors

1 For hinged and rolling watertight doors, the hinge pins and the wheel axle of these doors are to be of brass or other approved materials.

2 Hinged and rolling watertight doors except those that are to be permanently closed at sea are to be of the quick-acting or single-action type which is capable of being closed and secured from both sides of the doors.

2.2.3 Openings

2.2.3.1 Internal Openings

1 Internal openings below the final damage waterline or the intermediate waterline and considered to prevent progressive flooding in the calculation of the subdivision index in **2.3.2** are to be watertight. The "watertight" meant here refers to watertight integrity that is sufficient against a water head corresponding to the opening in question at the final equilibrium state and intermediate waterline.

2 The number of internal openings required to be watertight under the requirement of **-1** above is to be minimised, and their watertight doors are to comply with the following **(1)** to **(5)**. Relaxation of the requirements regarding watertight openings above the freeboard deck may be considered, where deemed by the Society that the safety of the ship is not impaired.

(1) Watertight doors are to be of ample strength and watertightness for water pressure to the equilibrium/intermediate waterplane.

(2) Those used while at sea are to be sliding watertight doors complying with the following requirements **(a)** to **(e)**:

(a) Capable of being remotely closed by power from the bridge

(b) Capable of being opened and closed by hand locally from both sides of the opening, with the ship listed 30 degrees to either side

(c) Provided with position indicators on the bridge and at all operating positions showing whether the doors are open or closed

(d) Provided with an audible alarm that will sound at the door position whenever such a door is remotely closed

(e) Power, control and indicators that are to be operable in the event of main power failure. Particular attention is to be paid to minimising the effect of control system failure.

(3) Those normally closed at sea are to be watertight doors complying with the following requirements **(a)** to **(d)**:

(a) Capable of being opened and closed by hand locally from both sides of the opening with the ship listed 30 degrees to either

side. If hinged, it is to be of the quick-acting or single-action type.

(b) Provided with position indicators showing whether the door are open or closed on the bridge and at all operating positions. Such indicators are to be operable in the event of main power failure.

(c) Provided with notices affixed to both sides of the watertight doors stating, "To be kept closed at sea" unless provided with means of remote closure

(d) To be in accordance with **(2)(d)** and **(e)** above, if operable remotely.

(4) Watertight doors or ramps fitted to internally subdivided cargo regions are to be permanently closed at sea and are to comply with the following requirements **(a)** to **(c)**:

(a) Not to be remotely controlled

(b) Provided with notices affixed to both sides of the watertight doors stating, "Not to be opened at sea"

(c) Fitted with a device that prevents unauthorised opening where accessible during the voyage

(5) Other watertight doors that are kept permanently closed at sea are to comply with **(4)(a)** and **(b)** above.

3 With respect to the requirements of **-2** above, watertight doors above the bulkhead deck are to comply with the requirements for doors provided for means of escape specified in **Chapter 13, Part R**.

4 The requirements in **-2** above for watertight doors are not applicable to bolted watertight manholes kept permanently closed at sea.

5 Watertight doors for internal openings required to be watertight are to comply with **2.2.2**, unless otherwise provided in **-2** above.

2.2.3.2 External Openings

1 All external openings below the final damage waterline in the calculation of the subdivision index are to be watertight.

2 The watertight doors for external openings required to be watertight under **-1** above are to comply with the following **(1)** to **(4)**.

(1) Watertight doors are to be of ample strength and watertightness for water pressure to the equilibrium/intermediate waterplane.

(2) Indicators showing whether the watertight doors are open or closed are to be provided on the bridge and all operating positions. Such indicators are to be operable in the event of main power failure. However, such indicators are not required for cargo hatch covers, fixed side scuttles and bolted manholes.

(3) Watertight doors are to be provided with a notice shown as **(a)** or **(b)** affixed at their operating positions. However, such notices are not required for cargo hold hatch covers, fixed side scuttles and bolted manholes.

(a) Doors which are normally closed at sea are to have notices stating, "To be kept closed at sea".

(b) Doors which are to be permanently closed at sea are to have notices stating, "Not to be opened at sea".

(4) Watertight doors for external openings in the shell plating below the bulkhead deck are to be permanently closed at sea. Such doors are to be fitted with a device that prevents unauthorised opening if they are accessible during voyage, except where specially approved by the Society.

3 Watertight doors for external openings above the equilibrium/intermediate waterplane but below the bulkhead deck are to be permanently closed at sea, and are to comply with the following requirements **(1)** to **(3)**:

(1) Indicators showing whether the watertight doors are open or closed are to be provided on the bridge and at all operating positions. Such indicators are to be operable in the event of main power failure. However, such notices are not required for fixed side scuttles.

(2) Watertight doors are to be provided with a notice affixed at their operating positions stating, "Not to be opened at sea". However, such notices are not required for fixed side scuttles.

(3) Watertight doors accessible during the voyage are to be fitted with a device that prevents unauthorised opening, except where specially approved by the Society.

4 Watertight doors for external openings required to be watertight are to comply with **2.2.2**, unless otherwise provided in **-2** and **-3** above.

2.3 Damage Stability

2.3.1 General

2.3.1.1 Application

Unless otherwise specified, the requirements in **2.3** apply to cargo ships of not less than 500 *gross tonnage* engaged in

international voyages and 80 *m* in freeboard length (L_f) and upwards, except for the following ships:

(1) Tankers, ships carrying liquefied gases in bulk and ships carrying dangerous chemicals in bulk to which **Part C** applies

(2) Bulk carriers having freeboards of type *B*-60 or *B*-100 as specified in the requirements of **Part V**
However, when carrying deck cargoes, the requirements in **2.3** apply.

(3) Special purpose ships complying with the requirements of *IMO* Resolution *MSC*.266(84).

2.3.1.2 Definitions

For the purpose of **2.3**, the following definitions apply:

(1) "Compartment" is a part of the hull formed by shells, decks and bulkheads that are to be watertight as a rule.

(2) "Group of compartments" is a part of the hull formed by two or more compartments that are adjacent with each other.

(3) "Deepest subdivision draught" (d_s) is the summer draught assigned to the ship in accordance with the requirements of **Part V**.

(4) "Light service draught" (d_l) is the service draught corresponding to the lightest anticipated loading and associated tankage, including, however, such ballast as may be necessary for stability and/or propeller immersion. The value d_l corresponds, in general, to the ballast arrival condition with 10 % consumables.

(5) "Partial subdivision draught" (d_p) is the draught that corresponds to the summation of light service draught specified in **(4)** above and 60 % of the difference between light service draught and the summer draught assigned to the ship in accordance with the requirements of **Part V**.

(6) "Subdivision length of the ship" (L_s) is the greatest projected moulded length in metres (*m*) of the ship at or below deck or decks limiting the vertical extent of flooding with the ship at the deepest subdivision draught.
"Deck or decks limiting the vertical extent of flooding" meant here refers, in principle, to the weather deck. However, when the ship has multiple decks above d_s + 12.5 (*m*) at the deepest subdivision draught, the deck just above d_s + 12.5 (*m*) is implied.

(7) "Amidships" is at the middle of the freeboard length (L_f).

(8) "Aft terminal" is the aft limit of L_s.

(9) "Forward terminal" is the forward limit of L_s.

(10) "Trim" is the difference between the draught forward and the draught aft, where the draughts are measured at the perpendiculars for the forward and aft ends of the freeboard length (L_f), disregarding any rake of the keel.

(11) "Breadth of ship" (B') is the greatest moulded breadth in metres (*m*) of the ship at or below the deepest subdivision draught.

(12) "Draught" (d') is the vertical distance in metres (*m*) from the keel line to the waterline in question at amidships.

(13) "Permeability of space" (μ) is the proportion of the immersed volume of that space (a compartment or group of compartments) that can be occupied by water. The value μ is to comply with **Table 2.3.1-1** or **Table 2.3.1-2** depending on the purpose of the space. The volume of spaces under consideration here is to be taken as the moulded volume. However, in spaces intended for the carriage of liquid, the more stringent value of μ is to be taken when calculating the subdivision index in **2.3.2**. Notwithstanding the provision above, where substantiated by calculations or where timber and wood chips are carried in cargo holds, permeability values other than those in **Tables 2.3.1-1** and **2.3.1-2** may be used. For the carriage of timber and wood chips in cargo holds, the permeability values in **Table 2.3.1-3** may be used.

(14) "Internal opening" is the opening provided in decks or bulkheads forming a compartment, excluding those completely exposed.

(15) "External opening" is the opening provided in shells, exposed decks or bulkheads forming a compartment.

(16) "Timber" means all types of wooden material covered by the *Code of Safe Practice for Ships Carrying Timber Deck Cargoes, 2011* (*IMO* resolution *A*.1048(27)), including both round and sawn wood but excluding wood pulp and similar cargo.

(17) "Timber deck cargo" means a cargo of timber carried on an uncovered part of a freeboard or superstructure deck.

(18) "Machinery spaces" are spaces between the watertight boundaries of a space containing the main and auxiliary propulsion machinery, including boilers, generators and electric motors primarily intended for propulsion.

Table 2.3.1-1 Permeability of General Compartments

Space for	Locker	Accommodation	Machinery	Void	Liquids
Permeability	0.60	0.95	0.85	0.95	0 or 0.95

Table 2.3.1-2 Permeability of Cargo Compartments

Space for	Permeability at draught d_s	Permeability at draught d_p	Permeability at draught d_l
Dry cargo spaces	0.70	0.80	0.95
Container spaces	0.70	0.80	0.95
Ro-ro spaces	0.90	0.90	0.95
Cargo liquids	0.70	0.80	0.95

Table 2.3.1-3 Permeability of Compartments Regarding Timber Cargo

Space for	Permeability at draught d_s	Permeability at draught d_p	Permeability at draught d_l
Timber cargo in holds	0.35	0.70	0.95
Wood chip cargo	0.60	0.70	0.95

2.3.2 Subdivision Index

2.3.2.1 Subdivision Index

1 The value of the Required Subdivision Index (R) for a ship is to be given by the following formula:

(1) In case $L_s > 100\ m$

$$R = 1 - \frac{128}{L_s + 152}$$

(2) In case $100\ m \geq L_s$

$$R = 1 - \left[1 \Big/ \left(1 + \frac{L_s}{100} \times \frac{R_0}{1 - R_0}\right)\right]$$

R_0: The value R as calculated in accordance with the equation in **(1)** above.

2 The Attained Subdivision Index (A) for the ship is to be not less than the Required Subdivision Index (R), calculated in accordance with **-1** above. A is obtained by the summation of the partial indices A_s, A_p and A_l, weighted as shown and calculated for the draughts d_s, d_p and d_l specified in **2.3.1.2(3)** to **(5)** in accordance with the following formula:

$$A = 0.4A_s + 0.4A_p + 0.2A_l$$

Each partial index is a summation of contributions from all damage cases taken in consideration, using the following formula:

$$A_x = \Sigma\, p_i \cdot s_i$$

Where each partial index is to be not less than 0.5 R.

A_x: Each partial index corresponds to the draughts, specified in **2.3.1.2(3)** to **(5)**.

p_i: Probability that only a compartment or a group of compartments in question may be flooded (hereinafter referred to as "compartment flooding probability"), which is to be in accordance with the requirements in **2.3.2.2**.

s_i: Probability of survival after the flooding a compartment or a group of compartments in question (hereinafter referred to as "probability of survival") , which is to be in accordance with the requirements in **2.3.2.3**.

i: Indication of each compartment or group of compartments in question.

3 Partial index (A_x) is to be calculated under the following conditions:

(1) As a minimum, the calculation of A_x is to be carried out at level trim for the deepest subdivision draught and the partial subdivision draught. The estimated service trim may be used for the light service draught. If, in any anticipated service condition within the draught range from d_s to d_l, the trim variation in comparison with the calculated trim is greater than 0.005 L_f, one or more additional calculations of A_x are to be performed for the same draughts but including sufficient trims to ensure that, for all intended service conditions, the difference in trim in comparison with the reference trim used for one calculation will be not more than 0.005 L_f. Each additional calculation of A_x is to comply with **-2** above.

(2) All flooding in compartments and groups of compartments over the entire ship's length is to be taken into account.

(3) Assumed extent of hull damage is as follows:

(a) The vertical extent is to be up to d' + 12.5 (m) from the baseline. However, if a lesser extent gives a more severe result,

then such an extent is also to be assumed.

(b) Horizontal extent of damage is measured inboard from the ship's side at a right angle to the centreline at the level of the deepest subdivision draught, excluding the transverse extent of damage exceeding one-half of the breadth (B' /2) of the ship. Where the ship has compartments formed by longitudinal watertight bulkheads off the ship's centreline, it is to be assumed that damage extends over the group of compartments from the outmost one (hereinafter referred to as the "wing compartment") to the ship's centreline.

(4) In the flooding calculations carried out, only one breach of the hull damage needs to be assumed and only one free surface needs to be considered.

(5) In the case of unsymmetrical arrangements, the calculated A value is to be the mean value obtained from calculations involving both sides. Alternatively, it may be taken as that corresponding to the side that evidently gives the least favourable result.

(6) When determining the positive righting lever (GZ) of the residual stability curve in the intermediate and final equilibrium stages of flooding, the displacement for the intact load condition is to be used. All calculations are to be done with the ship freely trimming.

4 If pipes, ducts or tunnels are provided within an assumed damaged compartment or group of compartments, they are to be arranged in such a way as to prevent flooding progressing to other compartments, or they are to be fitted with devices that can easily control the progress of flooding to other compartments. However, where the attained subdivision index takes into account flooding to other compartments through the pipes, ducts or tunnels, and satisfies the requirements in **2.3.2**.

5 Notwithstanding the requirements of **-4** above, minor progressive flooding may be permitted if it is demonstrated that the effects of progressive flooding of other compartments through these pipes, ducts or tunnels can be easily controlled and the safety of the ship is not impaired. However, for ships up to L_f = 150 m the provision for allowing "minor progressive flooding" is to be limited to pipes penetrating a watertight subdivision with a total cross-sectional area of not more than 710 mm^2 between any two watertight compartments. For ships of L_f = 150 m and upwards the total cross-sectional area of pipes is not to exceed the cross-sectional area of one pipe with a diameter of L_f /5000 m.

6 Where penetrations for piping, ventilation, electrical cables, etc. are provided in the bulkheads, decks and shells forming a compartment, the watertight integrity of the penetrations are to be at least equivalent to the parts they penetrate.

7 With the same intent as wing tanks, the summation of the attained subdivision index A is to reflect the effects caused by all watertight bulkheads and flooding boundaries within the damaged zone. It is not correct to assume damage only to one-half of the ship's breadth (B') and ignore changes in the subdivision that would reflect lesser contributions.

8 In the forward and aft ends of the ship where the sectional breadth is less than the ship's breadth (B'), transverse damage penetration may extend beyond the centreline bulkhead.

9 Where, at the extreme ends of the ship, the subdivision exceeds the waterline at the deepest subdivision draught, the damage penetration b or B'/2 is to be taken from the centreline. **Fig. 2.3.2-1** illustrates the shape of the B' /2 line.

10 Where longitudinal corrugated bulkheads are fitted in wing compartments or on the centreline, they may be treated as equivalent plane bulkheads provided the corrugation depth is of the same order as the stiffening structure. The same principle may also be applied to transverse corrugated bulkheads.

11 Pipes and valves directly adjacent or situated as close as practicable to a bulkhead or to a deck can be considered to be part of the bulkhead or deck, provided the separation distance on either side of the bulkhead or deck is of the same order as the bulkhead or deck stiffening structure. The same applies for small recesses, drain wells, etc. In no case is the separation distance on either side of the bulkhead or deck to be more than 450 mm measured from the valve's near end to the bulkhead or deck. An example is shown in **Fig. 2.3.2-2**.

12 In setting the trim and G_0M used to calculate the subdivision index, reference is also to be made to **1.3.10-11** and **-12, Annex U1.2.1 "Guidance for Stability Information for Master", Part U of the Guidance**.

Fig. 2.3.2-1

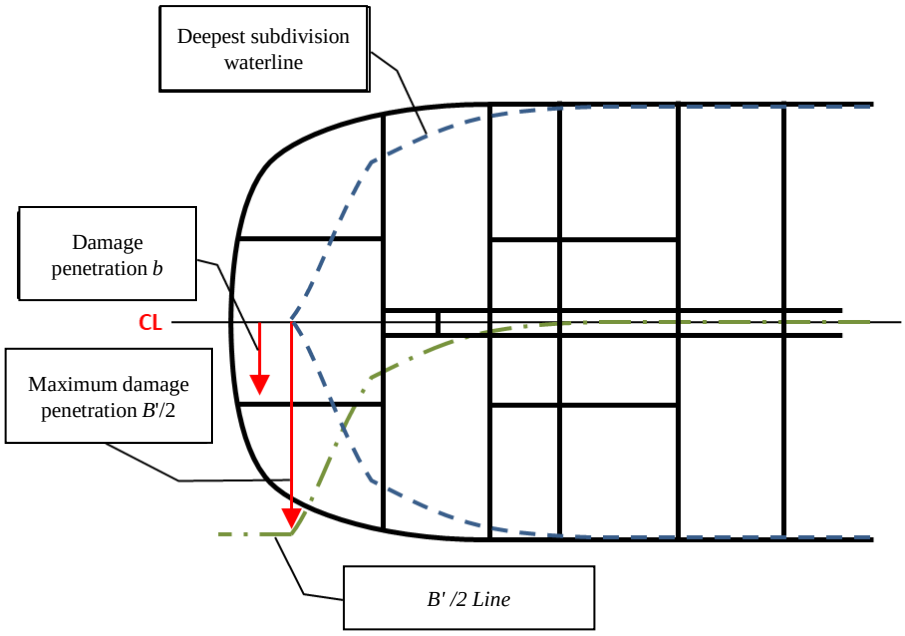

Fig. 2.3.2-2

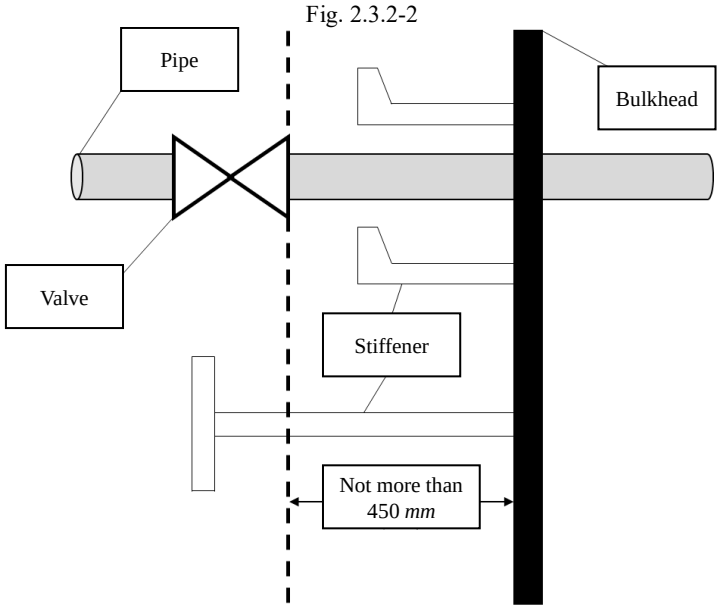

2.3.2.2 Compartment Flooding Probability (p_i)

1 The Compartment Flooding Probability (p_i) for a compartment or group of compartments is to be determined by the following **(1)**, **(2)** or **(3)** according to the number of damaged compartments:

(1) Where the damage involves a single zone only:

$$p_i = p(x1_j, x2_j) \cdot [r(x1_j, x2_j, b_k) - r(x1_j, x2_j, b_{k-1})]$$

Where:

x1: The distance (m) from the aft terminal of L_s to the aft end of the zone in question

x2: The distance (m) from the aft terminal of L_s to the forward end of the zone in question

b: The mean transverse distance (m) measured at right angles to the centreline at the deepest subdivision draught between the shell and an assumed vertical plane extended between the longitudinal limits used in calculating the factor p_i and which is a tangent to, or common with, all or part of the outermost portion of the longitudinal bulkhead under consideration. (*See* **Fig. 2.3.2-3**) This vertical plane is to be so orientated that the mean transverse distance to the shell is a maximum, but not more than twice the least distance between the plane and the shell. In any case, b is not to be taken as greater than $B'/2$.

j: The aftmost damage zone number involved in the damage starting with No. 1 at the stern.

k: The number of a particular longitudinal bulkhead as a barrier for transverse penetration in a damage zone counted from shell towards the centreline. The side shell has $k = 0$.

$p(x1, x2)$: It is specified in **-2** below.

$r(x1, x2, b)$:It is specified in **-3** below. However, $r(x1, x2, b_0)$ is to be taken as zero.

(2) Where the damage involves two adjacent zones:

$$p_i = p(x1_j, x2_{j+1}) \cdot [r(x1_j, x2_{j+1}, b_k) - r(x1_j, x2_{j+1}, b_{k-1})]$$
$$-p(x1_j, x2_j) \cdot [r(x1_j, x2_j, b_k) - r(x1_j, x2_j, b_{k-1})]$$
$$-p(x1_{j+1}, x2_{j+1}) \cdot [r(x1_{j+1}, x2_{j+1}, b_k) - r(x1_{j+1}, x2_{j+1}, b_{k-1})]$$

(3) Where the damage involves three or more adjacent zones:

$$p_i = p(x1_j, x2_{j+n-1}) \cdot [r(x1_j, x2_{j+n-1}, b_k) - r(x1_j, x2_{j+n-1}, b_{k-1})]$$
$$-p(x1_j, x2_{j+n-2}) \cdot [r(x1_j, x2_{j+n-2}, b_k) - r(x1_j, x2_{j+n-2}, b_{k-1})]$$
$$-p(x1_{j+1}, x2_{j+n-1}) \cdot [r(x1_{j+1}, x2_{j+n-1}, b_k) - r(x1_{j+1}, x2_{j+n-1}, b_{k-1})]$$
$$+p(x1_{j+1}, x2_{j+n-2}) \cdot [r(x1_{j+1}, x2_{j+n-2}, b_k) - r(x1_{j+1}, x2_{j+n-2}, b_{k-1})]$$

n: The number of adjacent damage zones involved in the damage

2 The Compartment Flooding Probability $p(x1, x2)$ is to be determined by the following **(1)**, **(2)** or **(3)** according to the longitudinal position of the compartment under consideration:

(1) Where neither the limits or the groups of compartments under consideration coincide with the aft or forward terminals:

In case $J \leq J_k$:

$$p(x1, x2) = p_1 = \frac{1}{6} J^2 (b_{11} J + 3 b_{12})$$

In case $J > J_k$:

$$p(x1, x2) = p_2 = -\frac{1}{3} b_{11} {J_k}^3 + \frac{1}{2}(b_{11} J - b_{12}) {J_k}^2 + b_{12} J J_k - \frac{1}{3} b_{21} ({J_n}^3 - {J_k}^3)$$
$$+ \frac{1}{2}(b_{21} J - b_{22})({J_n}^2 - {J_k}^2) + b_{22} J (J_n - J_k)$$

J: Non-dimensional damage length given below:

$$J = \frac{(x2 - x1)}{L_s}$$

x1 and *x2*: As specified in **-1** above.

J_k: As given by the following equations:

In case $L_s \leq 260\ m$:

$$J_k = \frac{J_m}{2} + \frac{1 - \sqrt{1 - \frac{55}{6} J_m + \frac{121}{4} {J_m}^2}}{11}$$

$$J_m = \min\left(\frac{10}{33}, \frac{60}{L_s}\right)$$

In case $L_s > 260\ m$:

$$J_k = J_k^* \cdot \frac{260}{L_s}$$

$${J_k}^* = \frac{{J_m}^*}{2} + \frac{1 - \sqrt{1 - \frac{55}{6} {J_m}^* + \frac{121}{4} {J_m}^{*2}}}{11}$$

Where: $J_m^* = 3/13$

$$J_m = \frac{60}{L_s}$$

b_{11}, b_{12}, b_{21} and b_{22}: Coefficients given by the following:

$$b_{11} = \frac{1}{6}\left(\frac{2}{(J_m - J_k) J_k} - \frac{11}{{J_k}^2}\right)$$

$$b_{12} = 11 \qquad (\text{If } L_s \leq 260(m))$$

$$= \frac{1}{6}\left(\frac{11}{J_k} - \frac{1}{J_m - J_k}\right) \quad (\text{If } L_s > 260(m))$$

$$b_{21} = -\frac{1}{6}\frac{1}{(J_m - J_k)^2}$$

$$b_{22} = \frac{1}{6}\frac{J_m}{(J_m - J_k)^2}$$

J_n: Normalised length of a compartment or group of compartments is to be taken as the lesser of J and J_m.

(2) Where the aft limit of the compartment or group of compartments under consideration coincides with the aft terminal or the forward limit of the compartment or group of compartments under consideration coincides with the forward terminal:

In case $J \leq J_k$:

$$p(x1, x2) = \frac{1}{2}(p_1 + J)$$

In case $J > J_k$:

$$p(x1, x2) = \frac{1}{2}(p_2 + J)$$

$x1, x2, p_1, p_2, J$ and J_k: As specified in **(1)** above.

(3) Where the compartment or group of compartments under consideration extends over the entire subdivision length (L_s):

$p(x1, x2) = 1$

$x1$ and $x2$: As specified in **(1)** above.

3 The factor $r(x1, x2, b)$ is to be determined by the following formulae:

$$r(x1, x2, b) = 1 - (1 - C) \cdot \left[1 - \frac{G}{p(x1, x2)}\right]$$

$x1, x2$ and b: As specified in **-1** above.

C: Coefficient given by the following:

$$C = 12 \cdot J_b \cdot (-45 \cdot J_b + 4)$$

J_b: Coefficient given by the following:

$$J_b = \frac{b}{15 \cdot B'}$$

G: As given by the following equations:

Where the compartment or group of compartments under consideration extends over the entire subdivision length (L_s):

$$G = G_1 = \frac{1}{2} b_{11} {J_b}^2 + b_{12} J_b$$

Where neither limits of the compartment or group of compartments under consideration coincides with the aft or forward terminals:

$$G = G_2 = -\frac{1}{3} b_{11} {J_0}^3 + \frac{1}{2}(b_{11} J - b_{12}) {J_0}^2 + b_{12} J J_0$$

Where the aft limit of the compartment or group of compartments under consideration coincides with the aft terminal or the forward limit of the compartment or group of compartments under consideration coincides with the forward terminal:

$$G = \frac{1}{2} \cdot (G_2 + G_1 \cdot J)$$

b_{11}, b_{12} and J: As specified in **-2** above.

J_0: Coefficient given by the following:

$$J_0 = \min(J, J_b)$$

Fig. 2.3.2-3 Examples of Assumed Vertical Plane (In Case of Single Damage Zone)

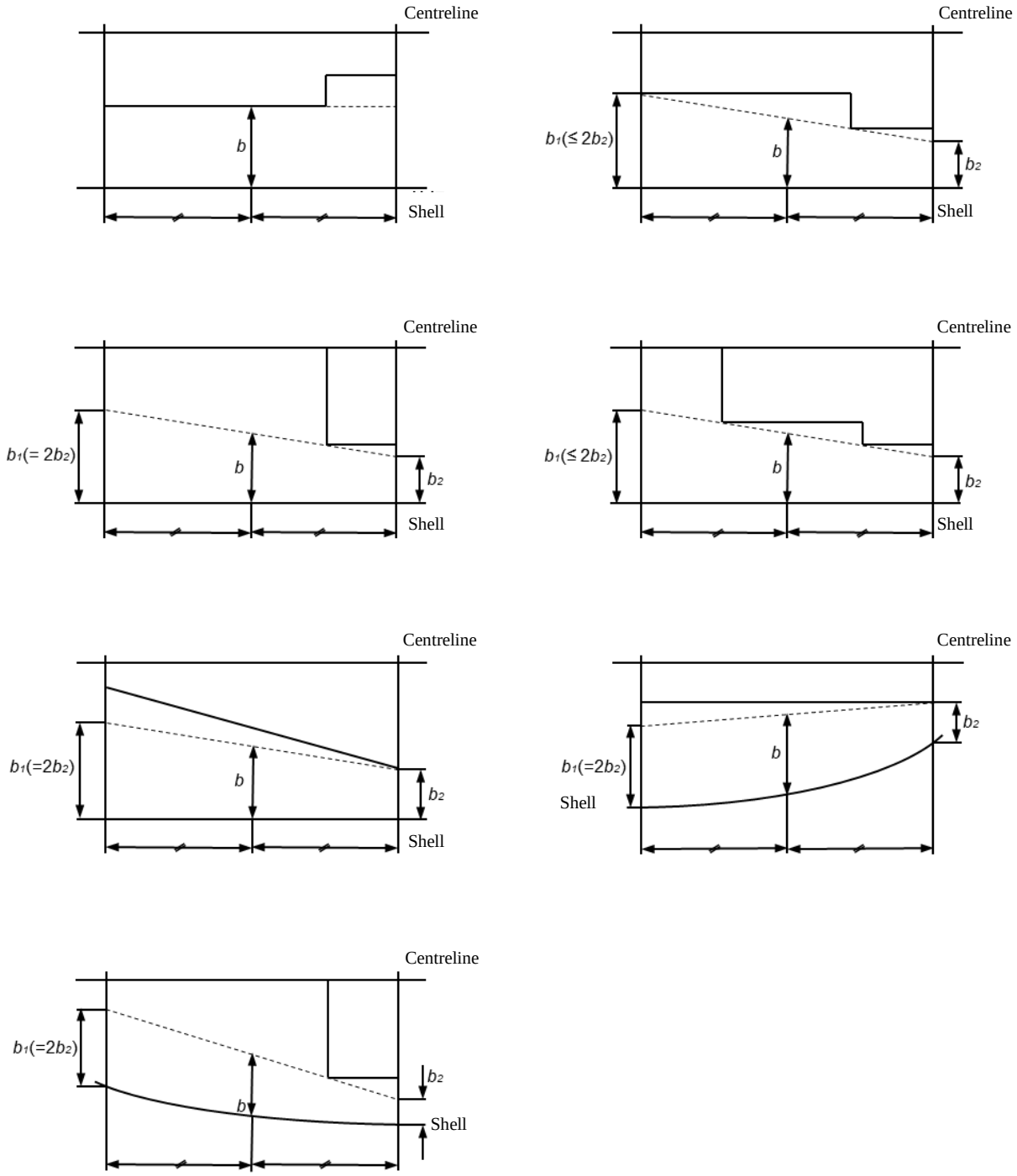

2.3.2.3 Probability of Survival (s_i)

1 The Probability of Survival (s_i) for any damage case at any initial load condition is to be obtained from the following formulae:

$$s_i = \min\left(s_{\text{intermediate, i}} \text{ or } s_{\text{final,i}}\right)$$

$s_{\text{intermediate,i}}$: Probability to survive all intermediate flooding stages until the final equilibrium stage. It is calculated in accordance with **-2**.

$s_{\text{final,i}}$: Probability to survive in the final equilibrium stage of flooding. It is calculated in accordance with **-3**.

2 The factor $s_{\text{intermediate,i}}$ is to be obtained from the following formulae:

(1) For cargo ships fitted with cross-flooding devices, the factor $s_{\text{intermediate,i}}$ is taken as the least of the values obtained from all flooding stages including the stage before equalisation, if any, and is to be calculated as follows. Where the intermediate heel angle exceeds 30°, $s_{\text{intermediate,i}}$ is to be taken as 0.

$$s_{\text{intermediate, i}} = \left(\frac{GZ_{\max}}{0.05} \cdot \frac{Range}{7}\right)^{\frac{1}{4}}$$

$GZ_{\max}$: Maximum positive righting lever (m) up to angle θ_v. However, in calculations of $s_{\text{intermediate,i}}$, it is not to be taken as more than 0.05 m.

θ_v: Angle (deg), at any stage of flooding, where the righting lever becomes negative, or the angle (deg) at which an opening incapable of being closed weathertight becomes submerged.

An "opening incapable of being closed weathertight" meant here includes ventilators provided with weathertight closing appliances in accordance with the requirements of **14.12.3.1-3** that for operational reasons have to remain open to supply air to the engine room, emergency generator room, or closed ro-ro and vehicle spaces (if the same is considered buoyant in the stability calculation or protecting openings leading below) for the effective operation of the ship. Where it is not technically feasible to treat some closed ro-ro and vehicle space ventilators as unprotected openings, an alternative arrangement that provides an equivalent level of safety may be used, provided that it is deemed appropriate by the Administration.

Range: Range of positive righting levers (deg) measured from angle θ_e. However, the positive range is to be taken up to angle θ_v and, in the calculations of $s_{\text{intermediate,i}}$, it is not to be taken as more than 7°.

θ_e: Equilibrium heel angle (deg) at any stage of flooding.

(2) Where cross-flooding fittings are required, the time for equalisation is not to exceed 10 minutes.

(3) For cargo ships not fitted with cross-flooding devices, the factor $s_{\text{intermediate,i}}$ is taken as 1, except if the Administration considers that the stability in intermediate stages of flooding may be insufficient, it is to require further investigation thereof.

3 The factor $s_{\text{final,i}}$ is to be obtained from the following formula:

$$s_{\text{final,i}} = K \cdot \left(\frac{GZ_{\max}}{0.12} \cdot \frac{Range}{16}\right)^{\frac{1}{4}}$$

K: Coefficient given by the following:

$K = 1.0$ if $\theta_e \leq \theta_{\min}$

$K = 0$ if $\theta_e \geq \theta_{\max}$

$K = \sqrt{\dfrac{\theta_{\max} - \theta_e}{\theta_{\max} - \theta_{\min}}}$ otherwise

Where, $\theta_{\min}$ is 25° and $\theta_{\max}$ is 30° for cargo ships.

θ_e: Final equilibrium heel angle (deg)

$GZ_{\max}$: As specified in **-2** above. However, in the calculations of $s_{\text{final,i}}$, it is not to be taken as more than 0.12 (m).

θ_v: Angle (deg), at any stage of flooding, where the righting lever becomes negative, or the angle (deg) at which an opening incapable of being closed weathertight becomes submerged.

Range: As specified in **-2** above. However, the positive range is to be taken up to angle θ_v and, in calculations of $s_{\text{final,i}}$, it is not to be taken as more than 16°.

4 Where horizontal watertight boundaries are fitted above the waterline under consideration, the factor (s) calculated for the lower compartment or group of compartments is to be obtained by multiplying the value as determined in **-1** above by the factor v_m given by the following formula:

$$v_m = v(H_{j,n,m}, d') - v(H_{j,n,m-1}, d')$$

$H_{j,n,m}$: It is the least height (m) above the baseline within the longitudinal range of $x1_{(j)} \ldots x2_{(j+n-1)}$ of the m-th horizontal boundary which is assumed to limit the vertical extent of flooding for the damaged compartments under consideration.

$H_{j,n,m-1}$: It is the least height (m) above the baseline within the longitudinal range of $x1_{(j)} \ldots x2_{(j+n-1)}$ of the m-1-th horizontal boundary which is assumed to limit the vertical extent of flooding for the damaged compartments under consideration.

j, n, $x1$ and $x2$: As specified in **2.3.2.2-1**.

m: It is each horizontal boundary counted upwards from the waterline under consideration.

$v(H_{j,n,m}, d')$ and $v(H_{j,n,m-1}, d')$: Coefficients given by the following:

$v(H, d') = 0.8\dfrac{(H - d')}{7.8}$ if $H_m - d' \leq 7.8$ m

$v(H, d') = 0.8 + 0.2\left[\frac{(H-d')-7.8}{4.7}\right]$; otherwise,

$v(H_{j,n,m}, d')$ is to be taken as 1, if H_m coincides with the uppermost watertight boundary of the ship within the range $(x1_{(j)} \ldots x2_{(j+n-1)})$, and $v(H_{j,n,0}, d')$ is to be taken as 0.

v_m is to be taken as 0, if v_m determined by the above formula is taken as less than 0, and v_m is to be taken as 1, if v_m determined by above formula is taken as more than 1.

5 Where the requirement in **-4** above is applied, in general, each contribution dA to the Attained Subdivision Index A is obtained from the following formula:

$$dA = p_i[v_1 s_{\min 1} + (v_2 - v_1)s_{\min 2} + \cdots + (1 - v_{m-1})s_{\min m}]$$

v_m: The value calculated in accordance with **-4** above.

$s_{\min}$: The least factor of s for all combinations of damage obtained when the assumed damage extends from the assumed damage height H_m downwards.

6 Probability of survival (s_i) is to be taken as 0 in cases where the final waterline (in consideration of sinkage, heel and trim) immerses the lower edge of openings through which progressive flooding may take place and such flooding is not accounted for in the calculation of the probability of survival (s_i). Such openings are to include air pipes, ventilators and openings which to be closed by means of weathertight doors or hatch covers.

7 Openings (e.g. access openings provided in the end bulkhead of the superstructure and cargo hatchways), air pipes and ventilators which are provided only with the weathertight closing apparatus specified in **Part C** are to be treated as allowing the progress of flooding when the waterline at the final equilibrium state immerses their lower edge.

8 The probability of survival (s_i) is to be taken as 0 if, taking into account sinkage, heel and trim, any of the following **(1)** to **(3)** occur in any intermediate stage or in the final stage of flooding:

(1) Immersion of any vertical escape hatch in the freeboard deck.

(2) Any controls intended for the operation of watertight doors, valves on piping or on ventilation ducts intended to maintain the integrity of watertight bulkheads from above the freeboard deck become inaccessible or inoperable

(3) Immersion of piping or ventilation ducts located within the assumed extent of damage and carried through a watertight boundary if this can lead to the progressive flooding of compartments not assumed as flooded.

9 Notwithstanding the requirements given in **-8** above, where compartments are assumed to be flooded due to progressive flooding in the damage stability calculations, s_i may be taken as $s_{\text{intermediate,i}}$ for the flooding of those compartments under consideration.

10 Unsymmetrical flooding is to be in accordance with the following **(1)** and **(2)**.

(1) Unsymmetrical flooding is to be kept to a minimum consistent with efficient arrangements.

(2) Where it is necessary to correct large angles of heel, the means adopted is to, where practicable, be self-acting, but in any case where controls to equalisation devices are provided they are to be operable from above the freeboard deck. These fittings together with their controls are to be acceptable to the Society. With respect to equalisation devices, reference is to be made to the *IMO Res. MSC*.362(92) "*Revised Recommendation on a Standard Method for Evaluating Cross-flooding Arrangements*", as amended.

11 Tanks and compartments taking part in such equalisation are to be fitted with air pipes or equivalent means of sufficient cross-section to ensure that the flow of water into the equalisation compartments is not delayed.

12 Where the ship carries timber deck cargo, the probability of survival (s_i) is to be calculated as follows:

(1) Where the buoyancy of the timber deck cargo is taken into account, the cargo is to be in compliance with the following **(a)** to **(d)**:

(a) The timber deck cargo is to be stowed in accordance with the requirements of **Section 2.9**, **Part A** of the *Code of Safe Practice for Ships Carrying Timber Deck Cargoes, 2011* (*IMO* resolution *A*.1048(27)).

(b) The timber deck cargo is to be secured by lashings, uprights or both.

(c) Lashings and uprights are to comply with the requirements of **Section 2.10**, **Part A** of the *Code of Safe Practice for Ships Carrying Timber Deck Cargoes, 2011* (*IMO* resolution *A*.1048(27)).

(d) The height and extent of the timber deck cargo is to be in accordance with **Section 3.3.2** of **Chapter 3**, **Part A** of the *International Code on Intact Stability, 2008 (2008 IS Code)* and is to be at least stowed to the standard height of one superstructure.

(2) The permeability of the timber deck cargo is not to be less than 25 % of the volume occupied by the cargo up to one standard superstructure height.

(3) When the buoyancy of any timber deck cargo is taken into account, the timber deck cargo in way of a damaged zone is deemed ineffective to all areas in an athwartships direction. However, when the vertical extent of the damage stops at the upper deck and the coefficient (v_m) specified in **-4** above is used in the calculations, the buoyancy of the timber deck cargo may be taken into account in accordance with **(2)** above even if it is directly above the damaged area.

13 If the final waterline immerses the lower edge of any opening through which progressive flooding takes place, the factor "*s*" may be recalculated taking such flooding into account. However, in this case the *s* value is also to be calculated without taking into account progressive flooding and corresponding opening. The smallest *s* value is to be retained for the contribution to the attained index.

2.3.3 Closing Appliances for Moving Parts Penetrating the Shell Plating

2.3.3.1

Moving parts penetrating the shell plating below the deepest subdivision draught specified in **2.3.1.2(3)**, are to be fitted with a watertight sealing arrangement acceptable to the Society. The inboard gland is to be located within a watertight space of such volume that, if flooded, the freeboard deck is not to be submerged. The Society may require that if such a compartment is flooded, essential or emergency power and lighting, internal communication, signals or other emergency devices remain available in other parts of the ship.

2.3.4 Damage Control

2.3.4.1 Application

The requirements in **2.3.4** apply to cargo vessels of not less than 500 *gross tonnage* which are engaged in international voyages.

2.3.4.2 Damage Control of Cargo Ports and Other Similar Openings

For bow doors, stern doors or shell doors required to be watertight, indicators showing whether the doors are opened or closed are to be provided on the navigation bridge. However, this requirement may be dispensed with as deemed appropriate by the Society in circumstances where the doors are located high enough above the freeboard deck and their opening areas are considered small enough.

2.3.4.3 Damage Control Plan

1 A damage control plan approved by the Society is to be permanently exhibited or readily available on the navigation bridge, for the guidance of the officer in charge of the ship.

2 The damage control plan is to show clearly for each deck and hold, the boundaries of the watertight compartments, the openings therein with their means of closure (including the position of any controls thereof), and the arrangements for the correction of any list due to flooding. The damage control plan to be provided on-board the ship is to include the contents shown in **Table 2.3.4-1**.

3 The damage control plan is recommended to be prepared in the working language of the ship. Where the language used in the preparation of the plan is not English, a translation into English is to be included.

Table 2.3.4-1 Items and Contents of the Damage Control Plan

Items	Contents
(1) Boundaries of compartments	Boundaries of watertight compartments
(2) Watertight closing appliances for openings in the boundaries of compartments	Positions of the watertight closing appliances, indicators and alarms for openings and their control positions
(3) Weathertight closing appliances for openings in boundary walls	Positions of openings, however these are to be distinguished from the watertight ones mentioned above in **(2)**.
(4) Cross-flooding appliances, if provided	Cross-flooding appliances and their control positions
(5) Valves etc. remotely operated in order to control flooding through pipes, ducts and tunnels into other compartments	Positions of the bilge and ballast pumps and their control positions and associated valves, etc. and control positions
(6) Doors in the shell of the ship	Positions of the doors, including the positions of indicators, leakage detection and surveillance devices
(7) Weathertight closing appliances in local subdivision boundaries above bulkhead decks and exposed weather decks, if provided	Positions of weathertight closing appliances, including the positions of their controls and indicators
(Note) Closing appliances provided with non-weathertight openings (e.g. gastight) for flooding calculations need not be shown in the damage control plan.	

2.3.4.4 Booklet

1 The Booklet is to contain the information shown in the damage control plan. The damage control plan to be provided onboard ships is to include the contents shown in **Table 2.3.4-2**. The Booklet is to contain the following **(1)** and **(2)**.

(1) General precautions

General precautions are to consist of a list of equipment conditions and operational procedures, considered by the Society to be necessary to maintain watertight integrity under normal ship operations.

(2) Specific precautions

Specific precautions are to consist of a list of elements (i.e. closures, sounding of alarms, etc.) considered by the Society to be vital to the survival of the ship.

2 The Booklet is to be provided at a suitable place that is made available to the officers of the ship.

3 The Booklet is recommended to be prepared in the working language of the ship. Where the language used in the preparation of the Booklet is not English, a translation into English is to be included.

Table 2.3.4-2 Items and Contents of the Booklet

Items	Contents
(1) Boundaries of compartments	Same as **Table 2.3.4-1(1)** (A reduced scale may be accepted.)
(2) Watertight closing appliances for openings in the boundaries of compartments	In addition to **Table 2.3.4-1(2)**, it is clearly to be stated that closing appliances not used during navigation are to be kept closed and that closing appliances to be used during navigation are to be closed immediately after passage.
(3) Weathertight closing appliances for openings in boundary walls	In addition to **Table 2.3.4-1(3)**, it is clearly to be stated that closing appliances are to be closed immediately after passage.
(4) Cross-flooding appliances, if provided	In addition to **Table 2.3.4-1(4)**, operating procedures and an operating time to reach equilibrium conditions for cross-flooding appliances are to be included.
(5) Valves, etc. remotely operated in order to control flooding through pipes, ducts and tunnels into other compartments	In addition to **Table 2.3.4-1(5)**, it is clearly to be stated that valves, etc. are to be closed during navigation unless they are being used, and that valves, etc. being used at the time of collision are to be closed immediately.
(6) Ballast line with hydraulic control line along the pipe	It is clearly to be stated that valves, etc. are to be closed during navigation unless they are being used.
(7) Non-automatic closing appliances for non-watertight openings through which progressive flooding might occur, if applicable	Positions of openings. In addition, it is clearly to be stated that closing appliances to be used during navigation are to be closed immediately after passage.
(8) The results of the subdivision and damage stability analyses, if included	In addition to the results of subdivision and damage stability analyses, additional guidance is to be provided to ensure that the ship's officers referring to that information are aware that the results are included only to assist them in estimating the ship's relative survivability.
(9) Miscellaneous	(a) The Booklet is to contain additional details regarding the following information shown on the damage control plan, if required: • Positions of flooding detection systems, sounding devices, tank vents and overflows that do not extend above weather decks • Pump capacities and piping diagrams • Means of accessing and escaping from watertight compartments below bulkhead decks • Alerting ship management and other organisations to stand by and co-ordinate assistance (b) The Booklet is to include general instructions for controlling the effects of damage, such as the following: • Establishing the locations and safety of persons on board • To ascertain the extent of damage by sounding tanks and compartments • To determine rates of flooding by repeated soundings • Cautionary advice regarding the cause of any list • Cautionary advice regarding the cause of liquid transfer operations to lessen list or trim • Effects of creating additional free surfaces • Effects of initiating pumping operations to control the ingress of water

2.3.4.5 Damage Stability Information

Ships subject to **2.3** or **Chapter 4, Part CS**, are to be provided with damage stability information containing the following **(1)** and **(2)**:

(1) The following information for providing a master a simple and easily understandable way of assessing a ship's survivability in damage cases:

(a) The diagram of the results of the damage stability calculation required in **2.3.2** or **Chapter 4, Part CS** as a rapid means to evaluate the consequences of any ship damage (e.g. such as a damage consequence diagram categorised by the probability of survival as shown in **Fig. 2.3.4-3**).

(b) A notice regarding the use of this information, which states that different results may be seen in cases where flooding occurs under actual load conditions because the damage stability calculations given as reference are based on the assumed conditions.

(2) In cases where a ship voluntarily enters into a contract to use a shore-based emergency response system, the information needed for making a damage stability assessment as well as the contact information for the shore-based facility are to be included as part of damage stability information.

Fig. 2.3.4-3

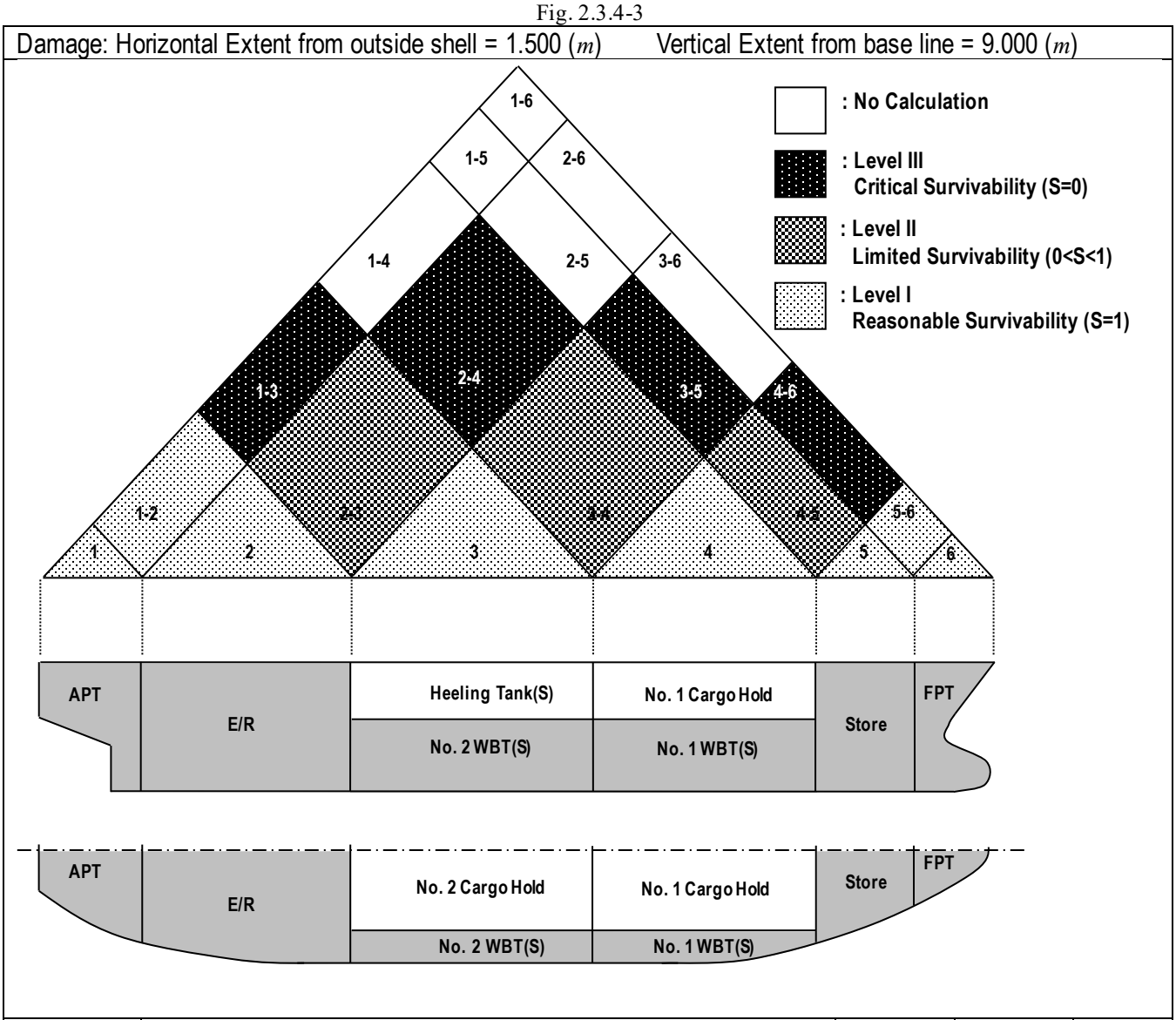

Damage Zone	Damaged Compartment	Horizontal Extent (*m*)	Vertical Extent (*m*)	S-value
1 Compartment flooding				
1	APT	Max	Max	1.000
2	E/R	Max	Max	1.000
3	No. 2 WBT(S)	1.500	9.000	1.000

4	No. 1 WBT(S)	1.500	9.000	1.000
5	Store	Max	Max	1.000
6	FPT	Max	Max	1.000
2 Compartments flooding				
1-2	APT E/R	Max	Max	1.000
2-3	E/R No. 2 WBT(S)	1.500	9.000	0.785
3-4	No. 1 WBT(S) No. 2 WBT(S)	1.500	9.000	0.458
4-5	No. 1 WBT(S) STORE	1.500	9.000	0.882
5-6	STORE FPT	Max	Max	1.000
3 Compartments flooding				
1-3	APT E/R No .2 WBT(S)	1.500	9.000	0.0000
2-4	E/R No. 1 WBT(S) No. 2 WBT(S)	1.500	9.000	0.0000
3-5	No. 1 WBT(S) No. 2 WBT(S) Store	1.500	9.000	0.0000
4-6	No. 1 WBT(S) Store FPT	1.500	9.000	0.0000
Note: The above damage compartments are the flooding case of the least safety factor within the damage zone.				

2.4 Structural Arrangements

2.4.1 Bottom Structures

2.4.1.1 Extent of Double Bottom

1 Ships are to be provided with watertight double bottoms extending from the collision bulkhead to the aft peak bulkhead. The longitudinal system of framing is, in general, to be adopted. The inner bottom is to be continued out to the ship's sides in such a manner as to protect the bottom to the turn of the bilge, and is not to be lower at any part than a plane parallel with the keel line and which is located not less than a vertical distance h (m) measured from the keel line specified in **2.1.48, Part A**.

$h = B'/20$

B': As specified in **2.3.1.2(11)**.

However, in no case is the value of h to be less than 0.76 m, and need not be taken as more than 2.0 m.

2 Notwithstanding **-1** above, part or all of double bottoms may be omitted from ships falling under either the following **(1)** or **(2)** or ships deemed appropriate by the Society that are less than 500 *gross tonnage* or which are not engaged in international voyages and less than 100 m in length.

(1) Ships complying with **Part N** or **Part S**

(2) Ships complying with **3.2.2, Part 3 of the "Rules for Marine Pollution Prevention Systems"**

3 For ships other than ships specified in **-2** above, double bottoms may be omitted in the way of watertight tanks on the condition that the safety of the ship is not impaired in the event of bottom or side damage.

4 Where a double bottom is omitted according to **-3** above or where an unusual bottom arrangement is adopted, the following **(1)** and **(2)** are to be complied with. For example, arrangements in which parts of the double bottom do not extend for the full width of the ship or in which the inner bottom is located higher than the partial subdivision draught (d_p) defined in **2.3.1.2(5)** are to be considered unusual bottom arrangements.

(1) When it is assumed that such spaces are subject to bottom damage, compartments are to be arranged to demonstrate that the factor s_i, when calculated in accordance with **2.3.2.3**, is not less than 1 for those service conditions which are the three loading conditions used to calculate the Attained Subdivision Index (A) specified in **2.3.2.1-2**. Assumed extent of damage is to be in accordance with the following **Table 2.4.1-1** instead of the requirements in **2.3.2.1-3(3)**. If any damage of a lesser extent than the maximum damage would result in a more severe condition, such damage is to be considered.

(2) The flooding of such spaces is not to render emergency power and lighting, internal communication, signals or other emergency devices inoperable in other parts of the ship.

Table 2.4.1-1 Assumed Extent of Damage

	For 0.3 L_C from the forward perpendicular of the ship	Any other part of the ship
Longitudinal extent	$1/3\,L_f{}^{2/3}$ or 14.5 m, whichever is less	$1/3\,L_f{}^{2/3}$ or 14.5 m, whichever is less
Transverse extent	B'/6 or 10 m, whichever is less	B'/6 or 5 m, whichever is less
Vertical extent, measured from the keel line	B'/20, to be taken not less than 0.76 m and not more than 2 m	B'/20, to be taken not less than 0.76 m and not more than 2 m
(Notes) 1. Keel line is to be in accordance with **2.1.48, Part A**. 2. Ship breadth (B') is to be in accordance with **2.3.1.2(11)**.		

2.4.1.2 Structures and Arrangements of Centre Girders and Side Girders

1 Centre girder is to extend as far forward and afterward as practicable.

2 Centre girder plates are to be continuous for 0.5 L_C amidships.

3 Where double bottoms are used for the carriage of fuel oil, fresh water or water ballast, the centre girders are to be watertight.

4 The depth of the centre girder is to be no less than B /16. However, except where the approval of the Society is obtained in accordance with either of the following **(1)** or **(2)**.

(1) Strength assessment by cargo hold analysis as specified in **Chapter 8**.

(2) Where the height of the centre girder is less than B /16, the thicknesses of the inner bottom plating and bottom shell plating are to be increased so that the moment of inertia of the double bottom obtained from the following formula may be equivalent to that corresponding to when the centre girder has the required height.

$$I = 1.23\frac{t_1 t_2}{t_1 + t_2} d_0{}^2$$

Where:

d_0: Height (m) of centre girder

t_1: Thickness (mm) of bottom shell plating

t_2: Thickness (mm) of inner bottom plating

5 The requirement in **-3** above may be suitably modified in narrow tanks at the end parts of the ship or where other watertight longitudinal girders are provided at about 0.25B from the centreline or where deemed appropriate by the Society.

6 The spacing of side girders provided on a double bottom in a cargo region is to be in accordance with the following **(1)** and **(2)**, unless finite element analysis is used for the calculations involved. Such side girders are to extend as far afterwards as practicable.

(1) The spacing of side girders is not to exceed $0.2 \times L_{DB}$.

L_{DB}: Length (m) of double bottom as specified in **7.3.1.5-1**.

(2) Where the spacing specified in **(1)** is unavoidably exceeded, adequate strengthening is to be made in accordance with **7.3.2.1(2)**.

7 Where side girders are unable to extend forward and/or aft due to a decrease in the breadth of the double bottom at the fore and/or aft parts, the side girders are to lap sufficiently with adjacent girders in order to keep the continuity of strength.

8 In the bottom forward of ships, girders are to be provided as required by **10.6**.

9 Adequate strengthening is to be made under main engines and thrust seating by means of additional full- or half-height girders.

10 Girders are to be provided under longitudinal bulkheads to properly strengthen the double bottom.

11 Where a duct keel is arranged, the centre girder may be replaced by two girders spaced no more than 3 m apart. Otherwise, for spacing wider than 3 m, the two girders are to be provided with support of the adjacent structure and demonstrated to have sufficient structural strength on the basis of supporting data submitted to the Society for approval. The structures in way of the floors are to provide sufficient continuity of the latter.

2.4.1.3 Arrangements of Floors

1 The spacing of floors provided on a double bottom in a cargo region is to be in accordance with the following **(1)** and **(2)**, unless finite element analysis is used for the calculations involved:

(1) The spacing of floors is not to exceed $0.2 \times B_{DB}$.

B_{DB}: Breadth (m) of the double bottom specified in **7.3.1.5-2**.

(2) Where the spacing specified in **(1)** is unavoidably exceeded, adequate strengthening is to be made in accordance with **7.3.2.1(2)**.

2 Notwithstanding the requirement in **-1** above, floors are to be provided at the following locations:

(1) At every frame in the main engine room. Floors may, however, be provided at alternate frames outside the engine seating, if the double bottom is framed longitudinally.

(2) Under thrust seating and boiler bearers

(3) Under transverse bulkheads

(4) At the locations specified in **10.6.2.2** or **10.6.3.2**, between the collision bulkhead and the after end of the strengthened bottom forward specified in **10.6.1.2**.

3 Watertight floors are to be so arranged that the subdivision of the double bottom generally corresponds to that of the ship.

4 Where a transverse bulkhead is provided with a lower stool, floors are to be fitted in line with both sides of the lower stool.

2.4.1.4 Single Bottom*

1 For ships with double bottoms that may be omitted partially or wholly in according with the requirements **2.4.1.1-2** or **-3**, their single bottoms are to be as deemed appropriate by the Society.

2 The bottom constructions in way of fore and aft peaks are to be as specified in **Chapter 11**.

2.4.2 Side Structures

2.4.2.1 Arrangements of Side Transverses

The spacing of side transverses fitted on a double side structure in a cargo region is to be in accordance with the following **(1)** and **(2)**, unless finite element analysis is used for the calculations involved:

(1) The spacing of side transverses is not to exceed $0.2 \times B_{DS}$.

B_{DS}: Breadth (height) (m) of the double side structure specified in **7.3.1.5-4**.

(2) Where the spacing specified in **(1)** is unavoidably exceeded, adequate strengthening is to be made in accordance with **7.3.2.1(2)**.

2.4.2.2 Arrangements of Side Stringers

The spacing of side stringers fitted on a double side structure in a cargo region is to be in accordance with the following **(1)** and **(2)**, unless finite element analysis is used for the calculations involved:

(1) The spacing of side stringers is not to exceed $0.2 \times L_{DS}$.

L_{DS}: Length (m) of the double side structure specified in **7.3.1.5-3**.

(2) Where the spacing specified in **(1)** is unavoidably exceeded, adequate strengthening is to be made in accordance with **7.3.2.1(2)**.

2.4.3 Fore and Aft Peaks

2.4.3.1 Compartments Forward of the Collision Bulkhead

Oils or other flammable liquids are not to be carried in tanks forward of the collision bulkhead.

2.4.3.2 Structures and Arrangements of Fore and Aft Peaks

The structures and arrangements of fore and aft peaks are to be as specified in **Chapter 11**.

Chapter 3 STRUCTURAL DESIGN PRINCIPLES

3.1 General

3.1.1 Overview

3.1.1.1

This Chapter specifies the requirements for structural design principles in **Table 3.1.1-1**.

Table 3.1.1-1 Overview of Chapter 3

Section	Title	Overview
3.1	General	Overview of this Chapter
3.2	Materials	Requirements for shipbuilding materials
3.3	Net Scantling Approach	Requirements for the net scantling approach, corrosion additions and corrosion protection
3.4	Structural Detail Principles	Requirements for the principles of structural details, such as structural continuity and structural member end connections
3.5	Minimum Requirements	Requirements for minimum thickness and slenderness
3.6	Idealisation of Stiffeners and Primary Supporting Members	Requirements for member idealisation to be considered in strength assessment, such as effective span and width of members
3.7	Load Calculation Point	Load calculation point requirements for strength assessment
3.8	Loading Manual and Loading Instruments	Requirements for the loading manual and loading instruments
Annex 3.2	Guidance for the Use of Fibre-reinforced Plastic (*FRP*)	Requirements for the use of fibre-reinforced plastic (*FRP*) products
Annex 3.8	Items to be Included in Loading Manual	Requirements for the loading manual, such as structure and items to be included

3.2 Materials

3.2.1 General

3.2.1.1 Application

1 The requirements in this **Part C** are based upon the use of materials which comply with the requirements in **Part K**, unless otherwise specified.

2 Where materials other than those specified in **Part K** are to be used, the required structural arrangement and scantlings in accordance with the requirements in this **Part C** are to be determined considering the properties of the materials.

3 Unless otherwise specified, the thicknesses in **3.2** are to be gross scantling.

3.2.1.2 Hull Structural Steel

1 The extent of the use of the hull structural steels specified in **Chapter 3, Part K** is to be limited to deckhouses and superstructures up to the third tier deck above the freeboard deck. As for the deckhouses above the third tier, the extent of the use of

the hull structural steels are to be as deemed appropriate by the Society.

2 The material factor *K* for the hull structural steels specified in **Chapter 3, Part K** is as given in **Table 3.2.1-1** according to the specified minimum yield stress.

3 Where hull structural steels other than those specified in **Table 3.2.1-1** are to be used, data corresponding to the standard of steels used (e.g. extent of use, location of structural members, section rigidity, fatigue strength, minimum thickness, etc.) is to be submitted to the Society and approved.

Table 3.2.1-1

Steel grade	Specified minimum yield stress (N/mm^2)	Material factor *K*
KA, *KB*, *KD* and *KE*	235	1.00
*KA*32, *KD*32, *KE*32 and *KF*32	315	0.78
*KA*36, *KD*36, *KE*36 and *KF*36	355	0.72
*KA*40, *KD*40, *KE*40 and *KF*40	390	0.68(1)
*KE*47(2)	460	0.62

(Notes)

(1) 0.66 may be taken where a fatigue assessment of the structure is performed to verify compliance with the requirements of the Society.

(2) Only when used for longitudinal hull girder structural members for ships subject to **Part 2-1**.

3.2.1.3 Rolled Steels for Low Temperature Service

1 Where steels for low temperature service specified in **Chapter 3, Part K**, the material factor *K* of those with specified minimum yield stress exceeding 235 N/mm^2 is to be as given in **Table 3.2.1-2** corresponding to the specified minimum yield stress.

2 Where steels for low temperature service other than those specified in **Table 3.2.1-2** are to be used, data corresponding to the standard of steels used (e.g. extent of use, location of structural members, section rigidity, fatigue strength, minimum thickness, etc.) is to be submitted to the Society and approved.

Table 3.2.1-2

Steel grade	Specified minimum yield stress (N/mm^2)	Material factor *K*
*KL*27	265	0.90
*KL*33	325	0.76
*KL*37	360	0.71

3.2.1.4 Rolled Stainless Steel Members or Stainless Clad Steel Plates

1 The material factor *K* for stainless steels or stainless clad steels specified in **Chapter 3, Part K** is to be the value obtained from the following formulae. However, the factor (*K*) is to be rounded to three decimal places and not less than 0.63.

$K = f_T\{8.81(\sigma_{Y_SUS}/1000)^2 - 7.56(\sigma_{Y_SUS}/1000) + 2.29\}$ (for $\sigma_{Y_SUS} \leq 355$ (N/mm^2))

$K = f_T f_C(235/\sigma_{Y_SUS})$ (for rolled stainless steel with $\sigma_{Y_SUS} > 355$ (N/mm^2))

f_C: Determined as follows:

$$f_C = 3.04(\sigma_{Y_SUS}/1000)^2 - 1.09(\sigma_{Y_SUS}/1000) + 1.09$$

σ_{Y_SUS}: The minimum value of yield strength or proof stress of stainless steel or stainless clad steel specified in **Chapter 3, Part K** (N/mm^2)

f_T: Determined as follows:

$$f_T = 0.0025(T - 60) + 1.00$$

If T is more than 100 °C, the value of f_T is at the discretion of the Society.

T: The maximum temperature in (°C) of cargo in contact with the materials. If the temperature is less than 60 °C, T is to be taken as 60 °C.

2 In the application of **-1** above, where deemed necessary by the Society, data corresponding to the standard of steels used (e.g. extent of use, location of structural members, section rigidity, buckling strength, minimum thickness, etc.) is to be submitted to the Society and approved.

3 The specified minimum yield stress of stainless steel or stainless clad steel is specified as follows.

$\sigma_Y = \sigma_{Y_SUS} / f_T$

σ_{Y_SUS} and f_T: As specified in **-1** above.

3.2.1.5 Aluminium Alloys

Where aluminium alloys specified in **Chapter 8, Part K** are used for the main hull structure, data corresponding to the standard of the materials used (extent of their use, location of structural members, section rigidity, fatigue strength, weldability, corrosion protection, etc.) is to be submitted to the Society and approved. However, aluminium alloys whose material grade is 6005*AS*, 6061*P*, or 6061*S*, or is an alloy that does not have suitable anti-corrosion characteristics as deemed by the Society are not to be used for parts likely to come into contact with sea water during normal operation, unless approved otherwise by the Society.

3.2.1.6 Fibre-reinforced Plastic (FRP)

Where it has been deemed appropriate by the Society, fibre reinforced plastic (*FRP*) may be used for equipment specified in this **Part C**. In this case, such usage is subject to the requirements given in **Annex 3.2 "Guidance for the Use of Fibre Reinforced Plastic (FRP)"**.

3.2.2 Application of Steels

3.2.2.1 General

1 The steels used for hull structures are to be of the grades provided in **Part K** in accordance with the requirements given in **Tables 3.2.2-1** and **3.2.2-2**. In applying these requirements *KB*, *KD* or *KE* may be substituted for *KA*; *KD* or *KE* for *KB*; *KE* for *KD*; *KD*32, *KE*32 or *KF*32 for *KA*32; *KE*32 or *KF*32 for *KD*32; *KF*32 for *KE*32; *KD*36, *KE*36 or *KF*36 for *KA*36; *KE*36 or *KF*36 for *KD*36; and *KF*36 for *KE*36; *KD*40, *KE*40 or *KF*40 for *KA*40; *KE*40 or *KF*40 for *KD*40; *KF*40 for *KE*40, respectively.

2 The ships referred to as "Container carriers and other ships with similar hatch openings configuration" stated in the row for "Strength deck at cargo hatch corner" in the "Deck plating" sections of **Tables 3.2.2-1** and **3.2.2-2** are ships that have a hatch opening over 0.7 B in width amidships.

3 Within 0.4 L_C of amidships, the widths of the single strakes of sheer strakes, stringer plates, bilge strakes (excluding ships of less than 150 *m* in length L_C having double bottom structures), strength deck plates adjoined to longitudinal bulkhead plating (excluding deck plates subject to Note 2 in **Tables 3.2.2-1** and **3.2.2-2**) and other members of grades *KE*, *KE*32, *KE*36, *KE*40, *KF*32, *KF*36 and *KF*40 are to be not less than the value given by the following expression. However, such widths need not exceed 1,800 *mm*.

$5L_C + 800\ (mm)$

4 In the application of steels to hull structures in **-3** above, rounded gunwales are to be treated as sheer strakes. The minimum width of the strake is to be 1,300 *mm* for L_C up to 100 *m* and 2,600 *mm* for L_C equal to and exceeding 250 *m* with the minimum width being determined by interpolation for intermediate lengths.

5 Where stainless clad steels specified in **Chapter 3, Part K** are to be used for hull structures, the thickness of the base steel is to be used as the thickness of the plate member in **Tables 3.2.2-1** and **3.2.2-2**.

6 The steels with thicknesses from 50 *mm* up to 100 *mm* used for the stern frame may be of the grades *KE*, *KE*32 and *KE*36, *KE*40.

7 The application of steels with a thickness from 50 *mm* up to 70 *mm* to hull structural members other than the stern frame is to be in accordance with the following **(1)** and **(2)**. the application of steels more than 70 *mm* in thickness is to be considered by the Society based on their specifications and properties which are to be submitted for approval.

(1) For mild steels, steel grades in the $40 < t \leq 50$ (*mm* thickness) column of **Table 3.2.2-1** may be used.

(2) For high tensile steels, the steel grades are to be in accordance with **Table 3.2.2-3**.

8 Where steel to be used has properties other than specified in **Tables 3.2.2-1** or **3.2.2-2**, the application of those steels is to be specially considered based on their specification and properties which are to be submitted to the Society for approval.

Table 3.2.2-1 Application of Mild Steels for Structural Members

Structural member		Application		Thickness of plate: t (mm)					
				$t \leq 15$	$15 < t \leq 20$	$20 < t \leq 25$	$25 < t \leq 30$	$30 < t \leq 40$	$40 < t \leq 50$
Shell plating	Sheer strake at strength deck	Within 0.4 L_C amidships	$L_C \leq 250$	A^{*1*4}	B	D		E	
			$L_C > 250$	E					
		Within 0.6 L_C amidships excluding the above		A^{*1*4}		B	D		E
		Other than those mentioned above		A^{*1*4}				B	D
	Side shell	Within 0.4 L_C amidships	Within 0.1 D from the lower surface of strength deck	A^{*1*4}		B	D		E
			Other than those mentioned above	A^{*1*4}				B	D
	Bilge strake	Within 0.4 L_C amidships	$L_C > 250$	D				E	
			Double bottom structures with $250 \geq L_C \geq 150$; and single bottom structures	A^{*1*4}	B	D		E	
		Within 0.6 L_C amidships excluding the above		A^{*1*4}		B	D		E
		Other than those mentioned above		A^{*1*4}				B	D
	Bottom plating (including keel plate)	Within 0.4 L_C amidships		A		B	D		E
Deck plating	Stringer plate in strength deck	Within 0.4 L_C amidships	$L_C \leq 250$	A^{*2*5}	B	D		E	
			$L_C > 250$	E					
		Within 0.6 L_C amidships excluding the above		A		B	D		E
		Other than those mentioned above		A				B	D
	Strength deck strake adjoining to longitudinal bulkhead plating	Within 0.4 L_C amidships		A^{*2*5}	B	D		E	
		Within 0.6 L_C amidships excluding the above		A		B	D		E
		Other than those mentioned above		A				B	D
	Strength deck other than mentioned above	Within 0.4 L_C amidships		A^{*2*5}		B	D		E
	Strength deck at cargo hatch corner	Side corners in cargo region for container carriers and other ships with similar hatch openings configuration		A^{*2}	B	D		E	
		Bulk carriers, ore carriers,	Within 0.6 L_C amidships	A^{*2}	B	D		E	

		combination carriers and other ships with similar hatch openings configuration	Cargo region excluding the above	*A*	*B*	*D*		*E*
		Other than those mentioned above within 0.4 L_C amidships		*A*[*2]	*B*	*D*		*E*
	Other exposed deck plating, in general	Within 0.4 L_C amidships		*A*			*B*	*D*
Longitudinal bulkhead plating	Upper strake in longitudinal bulkhead adjoining to strength deck	Within 0.4 L_C amidships		*A*	*B*	*D*		*E*
	Other than those mentioned above	Within 0.4 L_C amidships		*A*			*B*	*D*
Longitudinals	Upper strake in sloping plate of topside tank adjoining to strength deck	Within 0.4 L_C amidships		*A*	*B*	*D*		*E*
	Longitudinal plating members above strength deck	Corners of dome openings on trunk deck and inner deck plating above strength deck in ships with membrane tanks carrying liquefied gases in bulk	Within 0.6 L_C amidships	*A*[*5]	*B*	*D*	*E*	
			Cargo region excluding the above	*A*	*B*	*D*		*E*
		Longitudinal girders (including end brackets and face plates)	Within 0.4 L_C amidships	*A*[*3*5]	*B*	*D*		*E*
		Longitudinal plating members other than those mentioned above	Within 0.4 L_C amidships	*A*[*3*5]	*B*	*D*		*E*
Cargo hatch	Hatch coaming	Longitudinal coamings over 0.15 L_C (including top plates and their flanges but excluding other	Within 0.4 L_C amidships	*D*			*E*	
			Within 0.6 L_C amidships excluding the above	*D*				*E*

		stiffeners) (*See* **Fig. 3.2.2-1**) End brackets and deckhouse transitions	Other than those mentioned above	*D*			
	Hatch cover	Top plates, bottom plates and primary supporting members		*A*		*B*	*D*
Stern	Stern frame, rudder horn, rudder trunk, shaft bracket	–		*A*	*B*	*D*	*E*
Rudder	Rudder plate	–		*A*	*B*	*D*	*E*
Other	Structural members other than mentioned above (including stiffeners) and members to be applied at locations other than mentioned above			A^{*1*4}			

(Remarks)

*1 For ships with length of L_C exceeding 150 *m* and a single strength deck, single side strakes for ships without inner continuous longitudinal bulkheads between the bottom and the strength deck within the cargo region are not to be less than Grade *KB* as specified in **Part K**.

*2 For ships with length of L_C exceeding 150 *m* and a single strength deck, longitudinal strength members of the strength deck plating within 0.4 L_C amidships are not to be less than Grade *KB* as specified in **Part K**.

*3 For ships with length of L_C exceeding 150 *m* and a single strength deck, continuous longitudinal plating of strength members above the strength deck within 0.4 L_C amidships is not to be less than Grade *KB* as specified in **Part K**.

*4 For ships with ice strengthening area conforming to **Chapter 8, Part I**, shell strakes in the way of an ice strengthening area for plates are not to be less than Grade *KB* as specified in **Part K**.

*5 For ships with membrane tanks carrying liquefied gases in bulk with length of L_C exceeding 150 *m* having deck structures comprising a trunk deck and inner deck (*See* **Fig. 3.2.2-2**), the following structural members within 0.4 L_C amidships are not to be less than Grade *KB* as specified in **Part K**.

(1) Strength deck

(2) Inner deck above strength deck

(3) Longitudinal strength member plating between trunk deck and inner deck above strength deck

The above structural members for ships having similar deck structure are not to be less than grade *KB* where deemed necessary by the Society.

(Notes)

1 *A*, *B*, *D* and *E* refer to the following grades of steels:

A: *KA*

B: *KB*

D: *KD*

E: *KE*

2 Where the strength deck strake adjoined to the inner skin bulkhead of double hull ships is not a deck stringer plate, the deck strake may be treated as an ordinary strength deck strake.

3 Applicable areas of bilge strakes are as follows:

(1) If the point where the bottom flat line stops being parallel to the centreline of the ship is within 0.6 L_C amidships, the applicable part is to be taken as 0.6 L_C amidships.

(2) If the point where the bottom flat line stops being parallel to the centreline of the ship is outside 0.6 L_C amidships, the applicable part is to be taken as is.

4. The types of rudders and rudder plates used in way of the lower pintle for Type *D* and Type *E* rudders specified in **Chapter 13** and in way of upper part of Type *C* rudder specified in **Chapter 13** are to be in accordance with **Table 3.2.2-4**.

5 Continuous longitudinal plating of strength members above the strength deck (including trunk deck, inner deck and longitudinal strength member plating between trunk deck and inner deck) are to be treated as longitudinal plating members above the strength deck.

Fig. 3.2.2-1 Example of Cross Section of Longitudinal Hatch Coaming Area

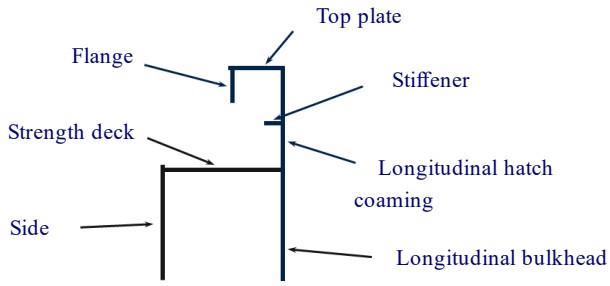

Fig. 3.2.2-2 Typical Deck Structure of Ships with Membrane Tank Carrying Liquefied Gases in Bulk

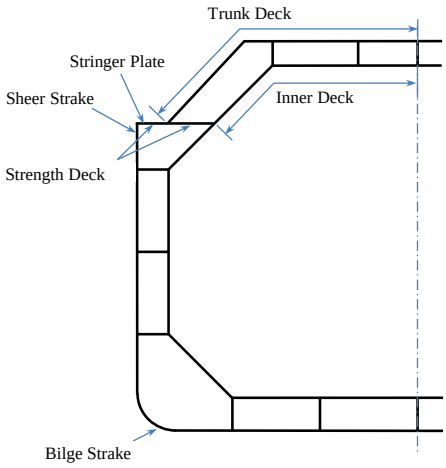

Table 3.2.2-2 Application of Tensile Steels for Structural Members

Structural member		Application		Thickness of plate: t (mm)					
				$t \leq 15$	$15 < t \leq 20$	$20 < t \leq 25$	$25 < t \leq 30$	$30 < t \leq 40$	$40 < t \leq 50$
Shell plating	Sheer strake at strength deck	Within 0.4 L_C amidships	$L_C \leq 250$	*AH*		*DH*		*EH*	
			$L_C > 250$	*EH*					
		Within 0.6 L_C amidships excluding the above		*AH*			*DH*		*EH*
		Other than those mentioned above		*AH*					*DH*
	Side shell	Within 0.4 L_C amidships	Within 0.1 D from lower surface of strength deck	*AH*			*DH*		*EH*
			Other than those mentioned above	*AH*					*DH*
	Bilge strake	Within 0.4 L_C amidships	$L_C > 250$	*DH*				*EH*	
			Double bottom structures with $250 \geq L_C \geq 150$ and single bottom structures	*AH*		*DH*		*EH*	
		Within 0.6 L_C amidships excluding the above		*AH*			*DH*		*EH*
		Other than those mentioned above		*AH*					*DH*
	Bottom plating (including keel plate)	Within 0.4 L_C amidships		*AH*			*DH*		*EH*
Deck plating	Stringer plate in strength deck	Within 0.4 L_C amidships	$L_C \leq 250$	*AH*		*DH*		*EH*	
			$L_C > 250$	*EH*					
		Within 0.6 L_C amidships excluding the above		*AH*			*DH*		*EH*
		Other than those mentioned above		*AH*					*DH*
	Strength deck strake adjoining to longitudinal bulkhead	Within 0.4 L_C amidships		*AH*		*DH*		*EH*	
		Within 0.6 L_C amidships excluding the above		*AH*			*DH*		*EH*
		Other than those mentioned above		*AH*					*DH*
	Strength deck other than mentioned above	Within 0.4 L_C amidships		*AH*			*DH*		*EH*
	Strength deck at cargo hatch corner	Side corners in cargo region for container carriers and other ships with similar hatch openings configuration		*AH*		*DH*		*EH*	
		Bulk carriers, ore carriers,	Within 0.6 L_C amidships	*AH*		*DH*		*EH*	

		combination carriers and other ships with similar hatch openings configuration	Cargo region excluding the above	*AH*	*DH*	*EH*
		Other than those mentioned above within 0.4 L_C amidships		*AH*	*DH*	*EH*
	Other exposed deck plating, in general	Within 0.4 L_C amidships		*AH*		*DH*
Longitudinal bulkhead plating	Upper strake in longitudinal bulkhead adjoining to strength deck	Within 0.4 L_C amidships		*AH*	*DH*	*EH*
Longitudinal bulkhead plating	Other than those mentioned above	Within 0.4 L_C amidships		*AH*		*DH*
Longitudinals	Upper strake in sloping plate of topside tank adjoining to strength deck	Within 0.4 L_C amidships		*AH*	*DH*	*EH*
Longitudinals	Longitudinal plating members above strength deck	Corners of dome openings on trunk deck and inner deck plating above strength deck in ships with membrane tanks carrying liquefied gases in bulk	Within 0.6 L_C amidships	*AH*	*DH*	*EH*
Longitudinals	Longitudinal plating members above strength deck	Corners of dome openings on trunk deck and inner deck plating above strength deck in ships with membrane tanks carrying liquefied gases in bulk	Cargo region excluding the above	*AH*	*DH*	*EH*
Longitudinals	Longitudinal plating members above strength deck	Longitudinal girders (including end brackets and face plates)	Within 0.4 L_C amidships	*AH*	*DH*	*EH*
Longitudinals	Longitudinal plating members above strength deck	Longitudinal plating members other than those mentioned above	Within 0.4 L_C amidships	*AH*	*DH*	*EH*
	Hatch coaming	Longitudinal coamings over	Within 0.4 L_C amidships	*DH*		*EH*

		0.15 L_C (including top plates and their flanges but excluding other stiffeners) (*See* **Fig. 3.2.2-1**) End brackets and deckhouse transitions	Within 0.6 L_C amidships excluding the above	*DH*		*EH*
			Other than those mentioned above	*DH*		
	Hatch cover	Top plates, bottom plates and primary supporting members		*AH*		*DH*
Stern	Stern frame, rudder horn, rudder trunk, shaft bracket	–		*AH*	*DH*	*EH*
Rudder	Rudder plate	–		*AH*	*DH*	*EH*
Other	Structural members other than mentioned above (including stiffeners) and members to be applied at locations other than mentioned above			*AH*		

(Notes)

1 *AH*, *DH* and *EH* refer to the following grades of steel:
AH: *KA*32, *KA*36 and *KA*40
DH: *KD*32, *KD*36 and *KD*40
EH: *KE*32, *KE*36 and *KE*40

2 Where the strength deck strake adjoining to the inner skin bulkhead of double hull ships is not a deck stringer plate, the deck strake may be treated as an ordinary strength deck strake.

3 Applicable areas of bilge strakes are as follows:
(1) If the point where the bottom flat line stops being parallel to the centreline of the ship is within 0.6 L_C amidships, the applicable part is to be taken as 0.6 L_C amidships.
(2) If the point where the bottom flat line stops being parallel to the centreline of the ship is outside 0.6 L_C amidships, the applicable part is to be taken as is.

4 The types of rudder and rudder plates used in way of the lower pintle for Type *D* and Type *E* rudders specified in **Chapter 13** and in way of upper part of Type *C* rudder specified in **Chapter 13** are to be in accordance with **Table 3.2.2-4**.

Table 3.2.2-3 Application of Tensile Steels with Thickness of More than 50 *mm* and Not More than 70 *mm*

Structural member		Application		Thickness of plate: t (*mm*)	
				$50 < t \leq 60$	$60 < t \leq 70$
Shell plating	Sheer strake at strength deck	Within 0.6 L_C amidships		*EH*	
		Other than those mentioned above		*DH*	
	Side shell	Within 0.4 L_C amidships	Within 0.1 D from the lower surface of the strength deck	*EH*	
			Other than those mentioned above	*DH*	
	Bilge strake	Within 0.6 L_C amidships		*EH*	
		Other than those mentioned above		*DH*	
	Bottom shell (including keel plate)	Within 0.4 L_C amidships		*EH*	
		Within 0.6 L_C amidships excluding the above		*AH*	*DH*
Deck plating	Stringer plate in strength deck	Within 0.6 L_C amidships		*EH*	
		Other than those mentioned above		*DH*	
	Strength deck strake adjoining to longitudinal bulkhead plating	Within 0.6 L_C amidships		*EH*	
		Other than those mentioned above		*DH*	
	Strength deck at cargo hatch corner	Within 0.4 L_C amidships		*EH*	
		Other than those mentioned above		*DH*	
	Strength deck other than those mentioned above	Within 0.4 L_C amidships		*EH*	
		Within 0.6 L_C amidships excluding the above		*AH*	*DH*
	Exposed deck plating, etc.	Within 0.4 L_C amidships		*DH*	*EH*
Longitudinal	Upper strake in longitudinal bulkhead adjoining to strength deck	Within 0.4 L_C amidships		*EH*	
		Within 0.6 L_C amidships excluding the above		*AH*	*DH*
	Other than those mentioned above	Within 0.4 L_C amidships		*DH*	*EH*
Longitudinals	Upper strake in sloping plate of topside tank adjoining to strength deck	Within 0.4 L_C amidships		*EH*	
		Within 0.6 L_C amidships excluding the above		*AH*	*DH*
	Longitudinal on strength deck (including brackets and face plates)	Within 0.4 L_C amidships		*EH*	
		Within 0.6 L_C amidships excluding the above		*AH*	*DH*
Cargo hatch	Hatch coaming	Longitudinal coamings over 0.15 L_C (including	Within 0.6 L_C amidships	*EH*	

		top plates and their flanges but excluding other stiffeners) (*See* **Fig. 3.2.2-1**) End brackets and deckhouse transitions	Other than those mentioned above	*DH*
Other	Structural members other than those mentioned above and members to be applied at locations other than those mentioned above			*AH*

(Notes)

1 Where the strength deck strake adjoining to the inner skin bulkhead of double hull ships is not a deck stringer plate, the deck strake may be treated as an ordinary strength deck strake.

Table 3.2.2-4 Special Requirements for Application of Steels for Rudders and Rudder Plates

Thickness: t (mm)	$t \leq 15$	$15 < t \leq 20$	$20 < t \leq 25$	$25 < t \leq 30$	$30 < t \leq 40$	$40 < t \leq 50$
Mild steels	*A*	*B*	*D*		*E*	
Tensile steels	*AH*		*DH*		*EH*	

3.2.2.2 Application of Steels for Ships Intended to Operate in Areas with Low Air Temperature

1 For ships designed to a specific design temperature (T_D) for operation in areas with low air temperatures (e.g. Arctic or Antarctic waters), the application of steels used for hull structures is to be suitable for the design temperature, regardless of the requirements specified in **Tables 3.2.2-1** and **3.2.2-2**.

2 The design temperature (T_D) specified in **-1** above is to be taken as the lowest daily average air temperature over one year in the ship's service area (*See* **Fig. 3.2.2-3**) and is to be classified in accordance with **Table 3.2.2-5**. For seasonally restricted services, the lowest daily average temperature within the relevant period of operation may be taken.

3 Notwithstanding the requirements in **-2** above, for the ships specified in **1.1.1-2, Part I**, the design temperature (T_D) is not to be greater than either the lowest daily average air temperature over a period of one year in the ship's service area (*See* **Fig. 3.2.2-3**) or 13 °C higher than the polar service temperature (*See* **1.2.1(21), Part I**) of the ship, whichever is lower, and the design temperature is to be classified in accordance with **Table 3.2.2-5**. For seasonally restricted services, the design temperature may be taken as either the lowest daily average temperature within the relevant period of operation or 13 °C higher than the polar service temperature, whichever is lower. The above-mentioned lowest daily average air temperature over a period of one year is to be determined based upon measurement data taken over at least 10 years.

4 The application of steels exposed to the atmosphere used on ships intended to operate in areas with low air temperatures specified in **-1** above is subject to **Table 3.2.2-6** corresponding to the structural member category. The details of the material classes are subject to **Figs. 3.2.2-4** and **3.2.2-5** corresponding to the design temperature category. However, the application of steels for structural members not specified in **Table 3.2.2-6** may be subject to **Tables 3.2.2-1** and **3.2.2-2**, regardless of the design temperature (T_D).

5 Ships subject to the requirements in **-1** above are registered with the relevant notations.

Table 3.2.2-5 Design Temperature Categories

Range of Design Temperature (T_D) (°C)	Design Temperature Category
$-15 \leq T_D < -10$	T_{Da}
$-25 \leq T_D < -15$	T_{Db}
$-35 \leq T_D < -25$	T_{Dc}
$-45 \leq T_D < -35$	T_{Dd}
$-55 \leq T_D < -45$	T_{De}

Table 3.2.2-6 Application of Steels Exposed to the Atmosphere used on Ships Intended to Operate in Areas of Low Temperatures or Cold Liquid Cargo

Structural member	Material class	
	Within 0.4 L_C amidships	Outside 0.4 L_C amidships
• Deck plating exposed to weather (in general) • Side plating above BWL(1) • Transverse bulkheads above BWL(1) (2) • Cargo tank boundary plating exposed to cold liquid cargoes(3)	I	I
• Strength deck plating • Strength deck plating at corners of hatches (except for large hatch openings) • Longitudinal members above strength deck (including brackets and face plates, except for those of continuous longitudinal hatch coamings) • Longitudinal bulkheads above BWL(1) (2) • Top side tank bulkheads above BWL(1) (2)	II	I
• Stringer plates in strength deck • Sheer strakes at strength deck • Strength deck plating at corners of hatch with large hatch openings • Deck strakes at longitudinal bulkhead • Face plates and webs of continuous longitudinal hatch coamings	III	II

(Notes)

(1) BWL: Ballast waterline is the waterline at the lowest draught condition during navigation and includes single strakes that cross it.

(2) Applicable to plating attached to hull envelope plating exposed to low air temperatures. At least one strake is to be considered in the same way as exposed plating with the strake width of at least 600 *mm*.

(3) Ships other than liquefied gas carriers.

Fig. 3.2.2-3 Example for Determination of Design Temperature

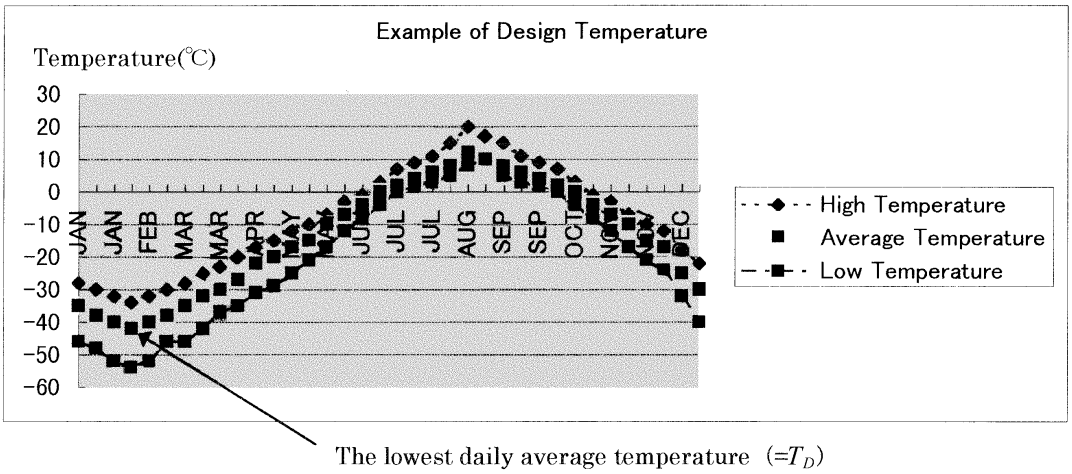

Fig. 3.2.2-4 Details of Material Classes for Mild Steels Corresponding to Design Temperature Categories

(Material symbols in this figure are indicated in **Note (1)** of **Tables 3.2.2-1** and **3.2.2-2**.)

	Design temperature category					Thickness: t (*mm*)					
	T_{Da}	T_{Db}	T_{Dc}	T_{Dd}	T_{De}	$t \leq 10$	$10 < t \leq 20$	$20 < t \leq 30$	$30 < t \leq 40$	$40 < t \leq 45$	$45 < t \leq 50$
Material Class	I					*A*		*B*	*D*		
	II	I				*A*	*B*	*D*			*E**3
	III	II	I			*B**1	*D*		*E**4		
		III	II	I		*D**2		*E**5		*7,*9	
			III	II	I	*D**2	*E**6		*8,*9		
				III	II	*E*		*9			
					III	*E*	*9				

(Notes)

*1 The web and faceplate of continuous longitudinal hatch coamings above the strength deck except within 0.4 L_C amidships are to be of Grade *D* or higher.

*2 Stringer plates and sheer strakes within 0.4 L_C amidships for ships with a length exceeding 250 *m* are to be of Grade *E* or higher.

*3 For Material Class I, Grade *D* may be used up to the thickness of 45 *mm*.

*4 For Material Class I, Grade *D* may be used up to the thickness of 35 *mm*.

*5 For Material Class I, Grade *D* may be used up to the thickness of 25 *mm*.

*6 For Material Class I, Grade *D* may be used up to the thickness of 15 *mm*.

*7 For Material Class I, Grade *E* may be used up to the thickness of 45 *mm*.

*8 For Material Class I, Grade *E* may be used up to the thickness of 35 *mm*.

*9 Steels to the satisfaction of the Society may be used.

Fig. 3.2.2-5 Details of Material Classes for Tensile Steels Corresponding to Design Temperature Categories

(Material symbols in this figure are indicated in **Note (1)** of **Tables 3.2.2-1** and **3.2.2-2**.)

	Design temperature category					Thickness t (mm)					
	T_{Da}	T_{Db}	T_{Dc}	T_{Dd}	T_{De}	$t \leq 10$	$10 < t \leq 20$	$20 < t \leq 30$	$30 < t \leq 40$	$40 < t \leq 45$	$45 < t \leq 50$
Material class	I					*AH*			*DH*		
	II	I				*AH*		*DH*		*EH**3	
	III	II	I			*AH**1	*DH*		*EH**4		
		III	II	I		*DH**2		*EH**5		*FH**7	
			III	II	I	*DH**2	*EH**6		*FH**8		
				III	II	*EH*		*FH*		*9	
					III	*EH*	*FH*		*9		

(Notes)

*1 The web and face plate of continuous longitudinal hatch coamings above strength deck except within 0.4 L_C amidships are to be of Grade *DH* or higher.

*2 Stringer plates and sheer strakes within 0.4 L_C amidships for ships with a length exceeding 250 *m* are to be of Grade *EH* or higher.

*3 For Material Class I, Grade *DH* may be used up to the thickness of 45 *mm*.

*4 For Material Class I, Grade *DH* may be used up to the thickness of 35 *mm*.

*5 For Material Class I, Grade *DH* may be used up to the thickness of 25 *mm*.

*6 For Material Class I, Grade *DH* may be used up to the thickness of 15 *mm*.

*7 For Material Class I, Grade *EH* may be used up to the thickness of 45 *mm*.

*8 For Material Class I, Grade *EH* may be used up to the thickness of 35 *mm*.

*9 Steels to the satisfaction of the Society may be used.

3.2.2.3 Application of Steels for Ships Intended to Carry Cargoes with Low Temperature

For ships carrying cargoes with low temperatures, the application of steels used for longitudinals in the cargo hold is to be in accordance with **Table 3.2.2-7**, regardless of the requirements specified in **Tables 3.2.2-1** and **3.2.2-2**. In this case, the design temperature (T_D) of the cargo hold is to be determined. Steel materials other than given in **Table 3.2.2-7** may be applied if the structure is such that thermal stress can be released and is deemed appropriate by the Society.

Table 3.2.2-7 Application of Materials Exposed to Low Temperatures for Ships Intended to Carry Cargoes with Low Temperature (1)

Design temperature T_D (°C)	Thickness of material t (mm)						
	$t \leq 10$	$10 < t \leq 15$	$15 < t \leq 20$	$20 < t \leq 25$	$25 < t \leq 30$	$30 < t \leq 40$	$40 < t \leq 50$
$-20 \leq T < -10$	*KB*	*KD*		*KE*			
$-30 \leq T < -20$	*KE*				*KL24A*		*KL24B*
$-40 \leq T < -30$	*KL24A*			*KL24B*			(2)
$-50 \leq T < -40$	*KL24B*			(2)			

(Notes)

(1)For members exposed to a design temperature lower than -50 °C or for strength decks exposed to low temperatures, the Society may require higher grade materials with a higher notch toughness depending on the thickness and the type of structure.

(2)Materials deemed appropriate by the Society.

3.2.2.4 Application of Steels for Ships Intended to Be Loaded with Cold Liquid Cargoes Other than Liquefied Gas Carriers

For ships other than liquefied gas carriers, intended to be loaded with cold liquid cargoes, the application of steels used for cargo hold boundary plating is to be in accordance with **Table 3.2.2-6**, regardless of the application of steels specified in **Tables 3.2.2-**

1 and 3.2.2-2. In this case, the design minimum cargo temperature (T_C) of the cold liquid cargoes is to be determined, and the details of material classes are subject to Fig. 3.2.2-4 or Fig. 3.2.2-5, depending on the design minimum cargo temperature (T_C), which category is subject to Table 3.2.2-5. The design minimum cargo temperature (T_C) is to be specified in the Loading Manual.

3.3 Net Scantling Approach

Symbols

For symbols not defined in this Section, refer to 1.5.

t: Net thickness (mm)

t_c: Corrosion addition (mm)

t_{gr}: Gross thickness (mm)

h_{stf}: Height (mm) of stiffener or primary supporting member

h_w: Web height (mm) of stiffener or primary supporting member

t_w: Web thickness (mm) of stiffener or primary supporting member

b_f: Face plate width (mm) of stiffener or primary supporting member

t_f: Face plate thickness (mm) of stiffener or primary supporting member

t_p: Thickness (mm) of the plating attached to a stiffener or to a primary supporting member (hereinafter referred to as "attached plating")

d_e: Distance (mm) from the upper edge of the web to the top of the flange for $L3$ profiles (*See* Fig. 3.3.3-1)

d_f: Distance (mm) for the shorter extension of flange for $L2$ profiles (*See* Fig. 3.3.3-1)

$t_{as-built}$: As-built thickness (mm), taken as the actual thickness provided at the newbuilding stage specified in 3.3.2.1

t_{gr_off}: Gross offered thickness (mm) as specified in 3.3.2.2

t_{gr_req}: Gross required thickness (mm)

t_{off}: Net offered thickness (mm) as specified in 3.3.2.3

t_{dm}: Design production margin (mm), taken as the thickness difference between offered gross thickness and required gross thickness (equal also to the difference between offered net thickness and required net thickness) as a result of scantlings applied by the designer or builder to suit the design or production situation. This difference in thickness is not to be considered as an additional corrosion margin.

t_{req}: Net required thickness (mm)

t_{vol_add}: Thickness (mm) for voluntary addition, taken as the thickness voluntarily added as the owner's extra margin or builder's extra margin for corrosion wastage in addition to t_c

t_{res}: Reserve thickness (mm), taken equal to 0.5 mm

t_{c1}, t_{c2}: Corrosion addition (mm) on one side of the considered structural member, to be obtained from Table 3.3.4-1 depending on the compartment

3.3.1 General

3.3.1.1 Net Scantling Approach

The net thickness t of a structural member is required for structural strength in compliance with the design basis. The corrosion addition t_c for a structural member is equivalent to the amount of corrosion expected to occur during the service life of the ship and is added independently from the net thickness (*See* Fig. 3.3.1-1). This approach clearly separates the net thickness from the corrosion addition and serves as a method of clearly ascertaining the status of the structure with respect to corrosion throughout the life of the ship.

3.3.1.2 Local and Global Corrosion

The net scantling approach distinguishes between local and global corrosion. Local corrosion is defined as uniform corrosion of local structural members, such as a single plate or stiffener. Global corrosion is defined as the average corrosion of larger areas, such as primary supporting members and the hull girder.

3.3.1.3 Exceptions to Gross Scantlings

Items that are determined in terms of gross scantlings do not follow the net scantling approach. In other words, they include

corrosion addition but without any owner's extra margin t_{vol_add}. Gross scantlings are presented with the suffix "gr". For example, the following requirements are intended for structural strength assessment based on gross scantlings:

(1) Longitudinal strength requirements (requirements other than those for hull girder ultimate strength)

(2) Scantlings of superstructures and deckhouse (11.3.2.3)

(3) Scantlings of massive pieces made of steel forgings and steel castings

3.3.1.4 Rounding of Net Thicknesses

Net required thickness t_{req} is obtained by rounding the net thickness calculated according to the requirements to the nearest half a millimetre. For example:

(1) For $10.75 \leq t < 11.25$ mm, the net required thickness is 11.0 mm.

(2) For $11.25 \leq t < 11.75$ mm, the net required thickness is 11.5 mm.

Fig. 3.3.1-1 Net Scantling Approach Scheme

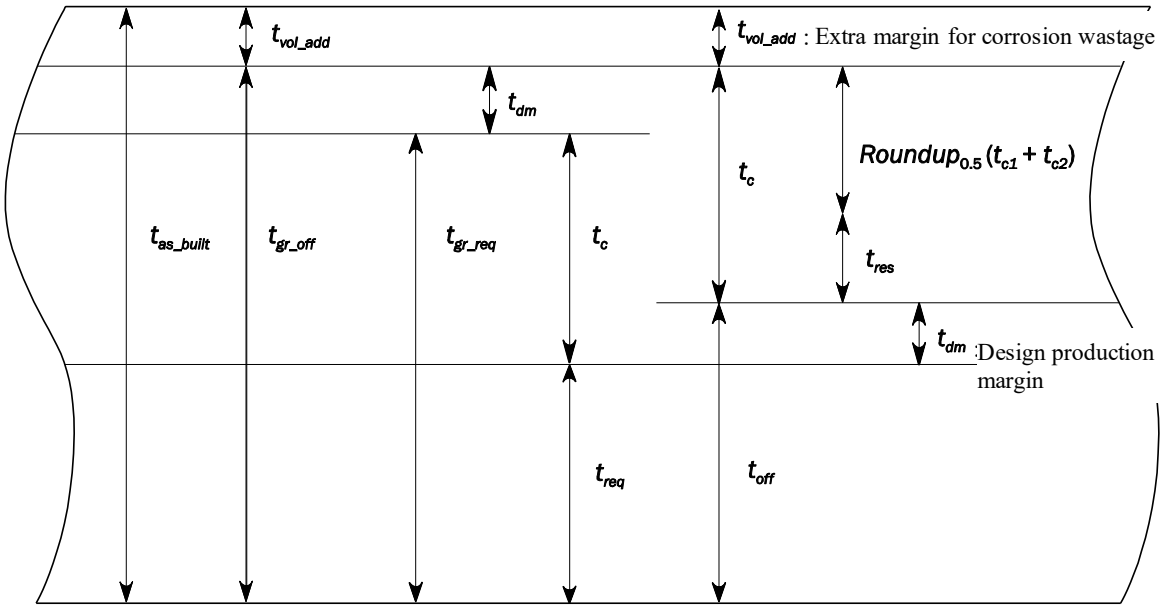

3.3.2 Definitions

3.3.2.1 As-built Thickness

The as-built thickness, t_{as_built}, is the thickness obtained from the following formula:

$$t_{as_built} = t_{req} + t_c + t_{dm} + t_{vol_add}$$

3.3.2.2 Gross Offered Thickness

The gross offered thickness, t_{gr_off}, is the gross thickness provided at the newbuilding stage, which is obtained by deducting any thickness for voluntary addition from the as-built thickness as follows:

$$t_{gr_off} = t_{as_built} - t_{vol_add}$$

3.3.2.3 Net Offered Thickness

The net offered thickness, t_{off}, is obtained by subtracting the corrosion addition from the gross offered thickness, as follows:

$$t_{off} = t_{gr_off} - t_c = t_{as_{built}} - t_{vol_{add}} - t_c$$

3.3.3 Corrosion Model for Strength Assessment

3.3.3.1

The scantlings to be considered in this **Part C** are as follows:

(1) Net offered thickness of plating is to be equal to or greater than the net required thickness of plating.

(2) The required net section modulus, moment of inertia and shear area properties of local supporting members are to be calculated using the net thickness of the attached plate, web and flange. The net sectional dimensions of local supporting members are as specified in **Fig. 3.3.3-1**. The net cross-sectional area, the moment of inertia about the axis parallel to the attached plate and the associated neutral axis position are to be obtained by deducting 50 % of the applicable corrosion magnitude from the surface of

the profile cross section. The required section modulus and required web thickness are to apply to areas clear of the end brackets. Local supporting members other than shown in **Fig. 3.3.3-1** are to be at the Society's discretion.

(3) The offered net sectional properties of primary supporting members are to be equal to or greater than the required net sectional properties that are to be based on the gross offered scantling with a reduction of the applicable corrosion addition as specified in **Table 3.3.3-1**, applied to all component structural members.

(4) The strength assessment and fatigue strength assessment by the cargo hold analysis specified in **Chapters 8** and **9** are to be carried out by deducting the corrosion addition specified in **Table 3.3.3-1** from the offered gross scantlings.

(5) Corrosion additions are not to be less than those specified in **3.3.4**.

Table 3.3.3-1 Assessment for Corrosion Applied to Gross Scantlings

Structural requirement	Property/analysis type		Applied corrosion addition
Minimum thickness assessment (all members including primary supporting members)	Thickness		t_c
Local strength assessment (plates, stiffeners and hold frames)	Thickness/sectional properties		t_c
	Stiffness/proportions/buckling capacity		t_c
	Hull girder sectional properties		0.5 t_c
Strength assessment of primary supporting structures (prescriptive)	Sectional properties		0.5 t_c
	Stiffness/proportions of web and flange/buckling capacity		t_c
	Hull girder sectional properties		0.5 t_c
Strength assessment by cargo hold analysis	Finite element model(1)		0.5 t_c
	Buckling strength		t_c
Longitudinal strength assessment	Sectional properties	Other than container carriers	0
		Container carriers	0.5 t_c
	Buckling capacity	Other than container carriers	0
		Container carriers	t_c
Torsional strength assessment by whole ship analysis	Finite element model(1)		0.5 t_c
	Buckling strength		t_c
Torsional strength assessment by formula calculation	Other than container carriers		0
	Container carriers		0.5 t_c
Hull girder ultimate strength/residual strength	Sectional properties		0.5 t_c
	Buckling/collapse capacity		0.5 t_c
Fatigue strength assessment (simplified stress analysis)	Hull girder sectional properties Local supporting members		0.25 t_c
Fatigue strength assessment (finite element analysis)	Finite element model(1)		0.25 t_c
Torsional fatigue strength assessment by whole ship analysis	Finite element model(1)		0.25 t_c
Whole ship analysis (other than torsional yield strength assessment and fatigue strength assessment)	Finite element model(1)		0.5 t_c

(Note)
(1) No consideration of corrosion addition is required for members not affecting strength assessment results.

Fig. 3.3.3-1 Net Sectional Properties of Local Supporting Members

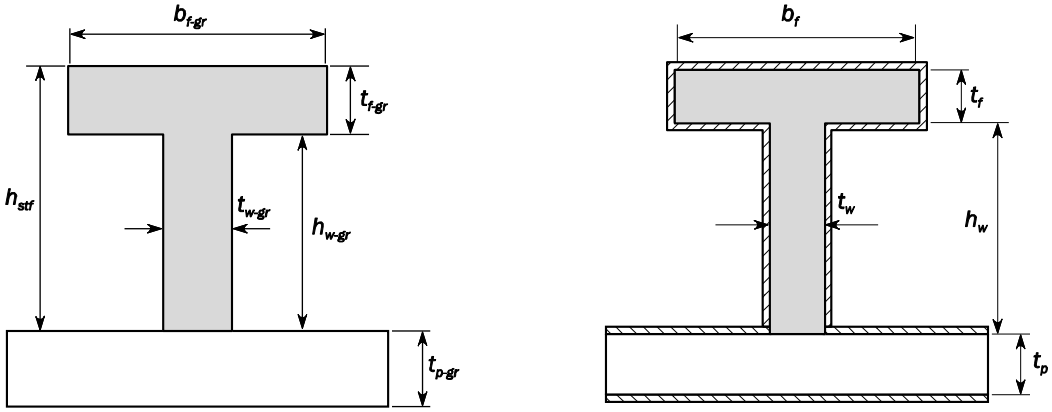

T-profile

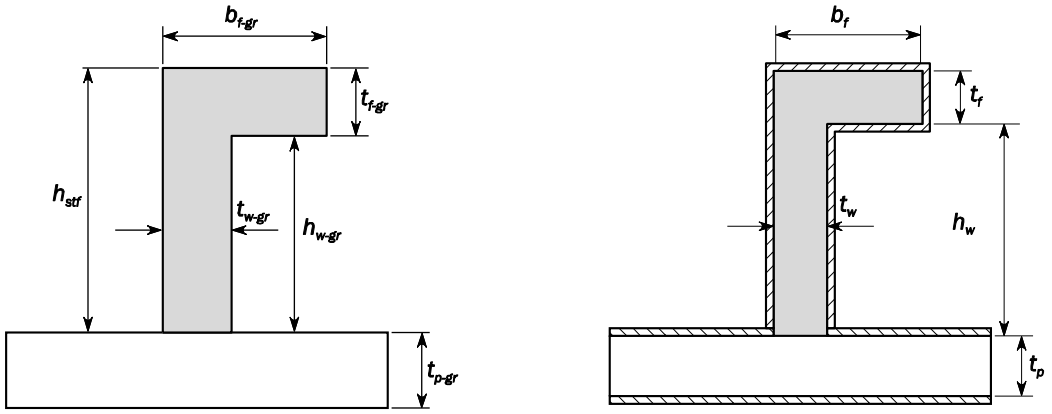

L-profile

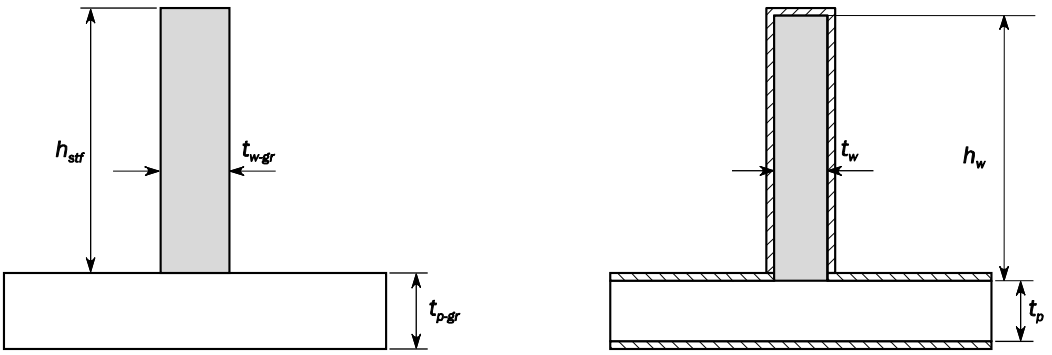

FB-profile

Fig. 3.3.3-1 Net Sectional Properties of Local Supporting Members (Continued)

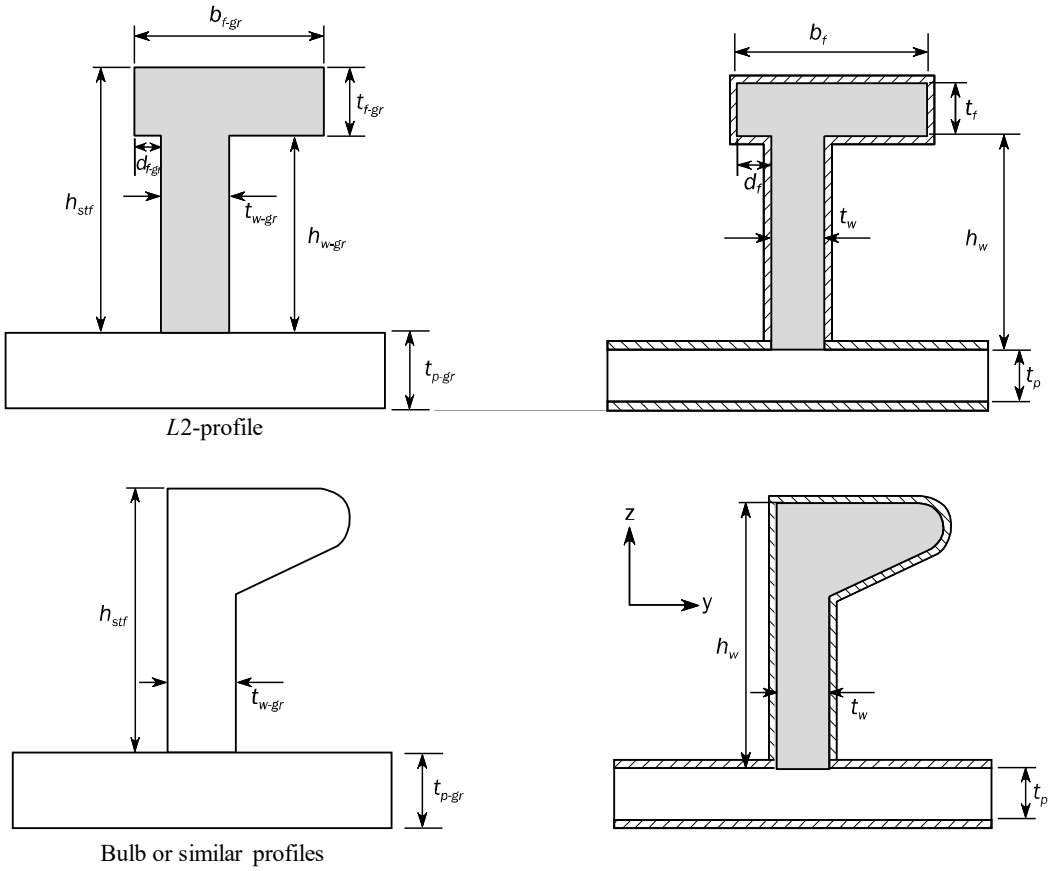

3.3.4 Corrosion Additions

3.3.4.1 Application

1 The corrosion additions specified in this **Part C** are applicable to carbon-manganese steels, stainless steels, stainless clad steels and aluminium alloys.

2 The corrosion additions for steels other than specified in **-1** above are to be deemed appropriate by the Society.

3.3.4.2 Corrosion Addition Values

1 Corrosion additions for carbon-manganese steels are to be in accordance with the following **(1)** and **(2)**:

(1) The total corrosion addition for both sides of the structural member, t_C, is to be obtained from the following formula:

$$t_C = Roundup_{0.5}(t_{c1} + t_{c2}) + t_{res}\ (mm)$$

(2) For an internal member within a given compartment, the total corrosion addition is to be obtained from the following formula:

$$t_C = Roundup_{0.5}(2t_{c1}) + t_{res}\ (mm)$$

2 Notwithstanding the requirement in **-1** above, the corrosion addition for both sides of hatch cover or hatch coaming, t_C, is to be in accordance with **Table 3.3.4-2**.

3 The corrosion addition for a structural member made of stainless steel or aluminium alloy is to be taken as follows:

$$t_C = t_{res}\ (mm)$$

4 The corrosion addition for structural members in which the corrosion addition for stainless clad steels is applied is to be obtained from the following formula:

$$t_C = Roundup_{0.5}(t_{cc} + t_{cs}) + t_{res}\ (mm)$$

t_{cc}: Corrosion addition (mm) for the carbon steel side, to be obtained from **Table 3.3.4-1** according to the compartment

t_{cs}: Corrosion addition for the stainless-steel side, to be taken as 0 mm.

3.3.4.3 Corrosion Addition Determination

1 When a local structural member/plate is affected by more than one value of corrosion addition, the most onerous value is to be applied to the entire strake.

2 The corrosion addition of a stiffener is to be determined according to the location of its connection to the attached plating.

Table 3.3.4-1 Corrosion Addition for One Side of a Structural Member

Compartment type	Details		t_{c1} or t_{c2} (mm)
Ballast tank, bilge tank, drain storage tank, chain locker(1)	Within 3 m vertically below the top plate of the tank(2)		1.0
	Elsewhere		0.5
Cargo hold or cargo tank	Container carriers (**Part 2-1**)	Inner bottom plating	1.5
		Elsewhere	0.5
	Dry bulk cargo holds (cargo holds of bulk carriers (**Part 2-2**), ore carriers (**Part 2-3**), etc.)(3)	Inner bottom plating and hopper sloping plating(4)	3.7
		Lower stool sloping plate and vertical plating	1.6
		Transverse and longitudinal bulkheads(5)	1.0
		Elsewhere	1.0
	Wood chip carriers (**Part 2-4**)	Inner bottom plating, hopper sloping plating and lower stool sloping and vertical plating	3.5
		Elsewhere	0.7
	General cargo ships (**Part 2-5**)	Inner bottom plating	3.0
		Elsewhere	0.7
	Low temperature cargo holds (refrigerated cargo ships (**Part 2-5**))		0.5
	Void cargo hold spaces (car carriers (**Part 2-6**))		0.25
	Tankers(6) (**Part 2-7**)		0.7
	Hold spaces containing a high temperature cargo tank (for asphalt, molten sulphur, etc.) (**Part 2-7**)		0.5
	Independent tanks for high temperature cargo (asphalt, etc.) (**Part 2-7**)		0.7
	Hold spaces containing an independent tank for low temperature cargo (liquefied gas carriers equipped with independent tanks (**Part 2-8** and **Part 2-9**))(7)		0
	Independent prismatic low temperature cargo tanks (liquefied gas carriers equipped with independent prismatic tanks (**Part 2-9**))(7)		0
	Hold spaces of Type C tank liquefied gas carriers (ordinary temperature) (**Part 2-10**)		0.5
	Hold spaces of Type C tank liquefied gas carriers (low temperature) (**Part 2-10**)		0
	Hold spaces of liquefied gas carriers with membrane tanks (**Part 2-11**)		0
	Other cargo holds (including those of ships equipped with a self-unloader(s) in the cargo holds of dedicated cement carriers, etc.)		0.7
Exposed to	Exposed deck plating		0.6

Compartment type	Details	t_{c1} or t_{c2} (mm)
atmosphere	Other members	0.5
Exposed to seawater	Shell plating between the minimum design ballast draught waterline and the scantling draught waterline	1.0
	Other members	0.5
Fuel oil tank(8) and lube oil tank		0.5
Fresh water tank		0.5
Void spaces(9) and dry spaces(10), (11)		0.5
Accommodation spaces		0
Compartment other than those mentioned above		0.5

(1) 1.0 *mm* is to be added to the plate surface within 3 *m* vertically above the upper surface of the chain locker bottom.

(2) Only applicable to tanks with an exposed deck as the tank top. The 3 *m* distance is to be measured vertically from and parallel to the top of the tank. Bilge tanks, drain storage tanks and chain lockers are to be taken as "Elsewhere."

(3) Dry bulk cargo holds include holds intended for the carriage of dry bulk cargoes.

(4) For ore carriers, only applicable to the range within 3 *m* vertically above the inner bottom plating. To be taken as 1.0 *mm* if more than 3 *m* vertically above the inner bottom plating.

(5) 0.2 *mm* is to be added to plates used for bulkheads within 3 *m* vertically above the inner bottom plating.

(6) 2.0 *mm* is to be added to the inner bottom plating and suction well in the vicinity of a suction bellmouth within a radius of approximately one longitudinal space from the outer periphery of the suction bellmouth (*See* **Figs. 3.3.4-1** and **3.3.4-2**).

(7) Where no environment control such as inerting is applied around the tank, or where the cargo is of corrosive nature, a corrosion addition deemed appropriate by the Society is to be considered.

(8) For compartments containing a gas fuel tank, the corrosion additions for the hold spaces of the same types of liquefied gas carriers are to be applied.

(9) Void spaces refer to spaces accessible only via bolted manhole openings or spaces not normally accessed, such as pipe tunnels. The internal spaces of pillars with a closed profile are also included.

(10) Dry spaces refer to the internals of machinery spaces, pump rooms, store rooms, steering gear spaces, etc.

(11) 2.0 *mm* is to be added to the inner bottom plating of the main engine room except if the corrosion protection is carried out with approval by the Society based on prior submitted data.

Fig. 3.3.4-1 Thickness Increase Range (No Longitudinal Bulkhead in the Vicinity of the Suction Bellmouth)

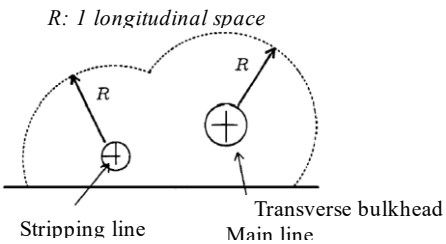

Fig. 3.3.4-2 Thickness Increase Range (With Longitudinal Bulkhead in the Vicinity of the Suction Bellmouth)

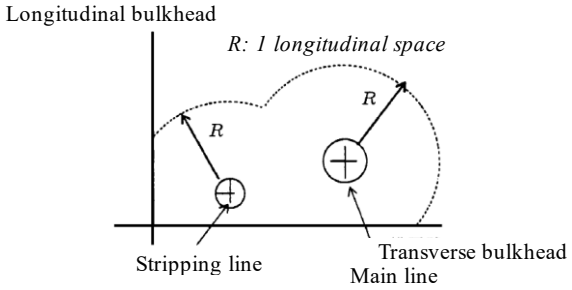

Table 3.3.4-2 Corrosion Additions for Both Sides of Hatch Covers and Hatch Coamings

Type	Ship type	Framing system		t_c (mm)
Type 1 Ship	Ships other than the below	Single skin hatch covers		2.0
		Double skin hatch covers	Top, side and bottom plating	1.5
			Internal structural members	1.0
		Hatch coamings, hatch coaming stays and stiffeners		1.5
	Container carrier Car carrier	Hatch covers (in general)		1.0
		Hatch coamings		1.5
Type 2 ship	Ore carrier Combination carriers which are designed to carry either oil or solid cargoes in bulk, like ore/oil carriers. Self-unloading ships (Ships specified in **1.3.1(13), Part B**(excluding those affixed with the notation "*CSR*") and **(19)**)	Single skin hatch covers		2.0
		Double skin hatch covers	Top, side and bottom plating	2.0
			Internal structural members	1.5
		Hatch coamings, hatch coaming stays and stiffeners		1.5

Notes

(1) Corrosion additions for both sides of hatch covers and hatch coamings on non-exposed decks are to be as deemed appropriate by the Society.

(2) The definitions of Type 1 ship and Type 2 ship are given **14.6.1.2**.

3.3.5 Corrosion Protection

3.3.5.1 General

1 All steel works are to be coated with a suitable paint.

2 The surface of steelworks is to be thoroughly cleaned and loose rust, oil and other harmful adhesives are to be removed before painted. At least the outer surface of shell plating below the waterline is to be sufficiently free from rust and mill scale before painting.

3 The interiors of dedicated tanks for carrying oils need not be painted regardless of the type of ship.

3.3.5.2 Requirements According to Ship Type, Application of Compartment, Etc.

1 Paints containing greater than 10 % aluminium by weight in the dry film are not to be used in hazardous areas defined in **4.2.3-1** or **-2, Part H** in tankers and ships carrying dangerous chemicals in bulk intended to carry crude oil and petroleum products having a flash point not exceeding 60 °C and a Reid vapour pressure below atmospheric pressure or other liquid cargoes having similar fire hazards.

2 Cargo holds of bulk carriers are to comply with the following **(1)** and **(2)**:

(1) Where ships are subject to the requirements of **Part 2-2**, structural members, hatch coamings and hatch covers in cargo holds

are to have an efficient protective coating (epoxy coating or equivalent) applied in accordance with the manufacturer's recommendation within the range indicated below (*See* **Fig. 3.3.5-1**). In the selection of the coating, due consideration is to be given by the owner to cargo conditions expected in service.

(a) All internal surfaces of cargo holds, excluding the flat tank top areas and the sloping plating of the hopper tanks approximately 300 *mm* below the side shell frame and brackets

(b) All internal and external surfaces of hatch coamings and hatch covers

(2) Where ships are subject to the requirements of **Parts 2-2**, **2-3** and **2-4**, omission of painting is allowed to those members such as inner bottom plating, slant plating of bilge hopper and slant plate of lower stools of transverse watertight bulkheads. However, omission of painting is not accepted for areas within the extent of painting specified in **-2(1)** above.

3 Notwithstanding the requirements in **-2(1)** above, ships subject to the requirements of **Part 2-4**, do not need to paint the parts where protection from corrosion can be expected due to secretions from the wood chip. However, this applies only to the parts that are in direct contact with the chips (excluding areas such as the inside of the upper deck).

Fig. 3.3.5-1 Minimum Coated Areas in Cargo Holds of Bulk Carriers

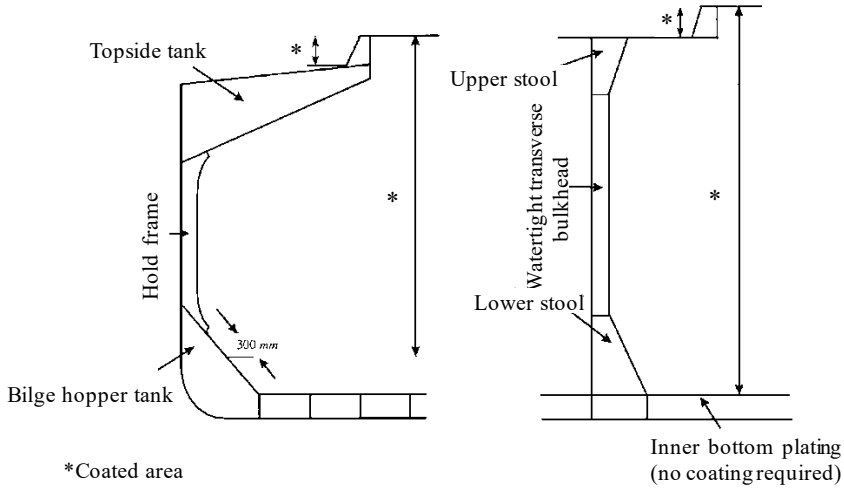

3.3.5.3 Protective Coatings in Dedicated Seawater Ballast Tanks and Double-side Skin Spaces

1 For dedicated seawater ballast tanks of all type of ships of not less than 500 *gross tonnage* engaged on international voyage and double-side skin spaces arranged in bulk carriers engaged on international voyages of 150 *m* in length and upwards as defined in **An1.2.1(1), Annex 1.1** of **Part 2-2**, the requirements are to be complied with *IMO* "*PERFORMANCE STANDARD FOR PROTECTIVE COATINGS FOR DEDICATED SEAWATER BALLAST TANKS IN ALL TYPES OF SHIPS AND DOUBLE-SIDE SKIN SPACES OF BULK CARRIERS*" (*IMO* Resolution *MSC*.215(82), as may be amended).

2 When applying the requirement in **-1** above, the following **(1)** and **(2)** are to be complied with:

(1) IACS Unified Interpretation SC223, as may be amended, is to be applied.

(2) The following tanks need not be deemed as dedicated seawater ballast tanks, provided that the coatings applied in the tanks specified in **(b)** below are confirmed by the coating manufacturer to be resistant to the media stored in the tanks and are applied and maintained according to the coating manufacturer's procedures:

(a) Tanks identified as "Spaces Included in Net Tonnage" in the International Convention on Tonnage Measurement of Ships, 1969.

(b) Seawater ballast tanks in livestock carriers also designated for the carriage of livestock dung.

3 For seawater ballast tanks and the like of ships other than specified in **-1** above, full coating is to be applied in accordance with the following requirements:

(1) Applicable paints are to be of an epoxy type or a type that is as durable and effective against corrosion.

(2) The surfaces of steels are to be properly prepared before coating and the thickness of the coating is to be adequate.

(3) Painting is to be of a hard protective coating unless otherwise approved by the Society.

(4) It is recommended that cathodic protection be applied together with the coatings as a backup.

(5) For dedicated seawater ballast tanks and double-side skin spaces, the coatings are preferably to be of a light colour easily

distinguishable from rust.

(6) For tanks with no part consisting of shell plating or exposed deck plating and cargo holds also used as seawater ballast tanks, coating of certain parts may be dispensed with, provided that alternative measures are taken for the parts in question.

3.3.5.4 Coatings for Cargo Oil Tanks

1 Coatings protection in accordance with the following **(1)** or **(2)** is to be applied to the cargo oil tanks of crude oil tankers of not less than 5,000 *tonnes* deadweight on international voyages:

(1) Coatings in accordance with "*PERFORMANCE STANDARD FOR PROTECTIVE COATINGS FOR CARGO OIL TANKS OF CRUDE OIL TANKERS*" (*IMO* Resolution *MSC*.288(87), as may be amended).

(2) Alternative means in accordance with "*PERFORMANCE STANDARD FOR ALTERNATIVE MEANS OF CORROSION PROTECTION FOR CARGO OIL TANKS OF CRUDE OIL TANKERS*" (*IMO* Resolution *MSC*.289(87), as may be amended).

2 "Crude oil tankers" in **-1** above refers to ships defined in **2.1.1(19), Part 1 of the Rules for Marine Pollution Prevention Systems** and falling under Items 1.11.1 or 1.11.4 of the Supplement to the International Oil Pollution Prevention Certificate (Form B).

3 The requirements in **-1** above need not be applied to "combination carriers" defined in **2.1.1(8), Part 1 of the Rules for Marine Pollution Prevention Systems** and "ships carrying dangerous chemicals in bulk" including ships certified to carry oils specified in **2.1.1(1), Part 1 of the Rules for Marine Pollution Prevention Systems**.

4 In application of **-1(1)** above, IACS Unified Interpretation SC259, as may be amended, is to be applied.

5 In application of **-1(2)** above, IACS Unified Interpretation SC258, as may be amended, is to be applied.

3.3.5.5 Cathodic Protection System

With respect to the requirement in **3.3.5**, where a cathodic protection system is adopted as a backup for coating or the omission of painting, the cargo tanks and their adjacent tanks in tankers and ships carrying dangerous chemicals in bulk, intended to carry crude oil and petroleum products having a flash point not exceeding 60 °C and Reid vapour pressure below atmospheric pressure or other liquid cargoes having similar fire hazards are to be in accordance with the following requirements **(1)** to **(4)**.

(1) The anodes are to have steel cores and these are to be sufficiently rigid to avoid resonance in the anode support and be designed so that the anode does not come free when the surroundings become wasted.

(2) The anode is to be provided in accordance with following **(a)** or **(b)**. When anode inserts and/or supports are welded to the structure, they are to be arranged so that the welds are clear of stress raisers. The supports at each end of an anode are not to be attached to separate structure which are likely to move independently.

(a) The steel inserts are to be attached to the structure by means of a continuous weld of adequate section.

(b) The steel inserts are to be attached to separate supports which are attached to the structure by means of a continuous welding of adequate section, by bolting, provided a minimum two bolts with locknuts are used or by appropriate mechanical means of clamping deemed as equivalent by the Society.

(3) Where anodes of aluminium or aluminium alloy are used, they are to meet the following requirements **(a)** and **(b)**:

(a) Anodes are to be located so that their potential energy does not exceed 274.68 *N-m*. The height of the anode is to be measured from the bottom of the tank to the centre of the anode, and its weight is to be taken as the weight of the anode as fitted, including the fitting devices and inserts. However, where anodes are located on horizontal surfaces not less than 1m wide and fitted with an upstanding flange or face flat projecting not less than 75 *mm* above the horizontal surface, the height of the anode may be measured from this surface.

(b) Anodes are not to be located under tank hatches or butterworth openings, unless protected from any objects falling on the fitted anodes by an adjacent structure.

(4) Anodes of magnesium or magnesium alloy are not permitted.

3.4 Structural Detail Principles

3.4.1 General Principles

3.4.1.1 Structural Continuity*

1 At the termination of a structural member, structural continuity is to be maintained by the fitting of a suitable supporting structure. Abrupt changes in transverse section properties of longitudinal members are to be avoided. Smooth transitions are to be provided. Attention is to be paid to the structural continuity, in particular in the following areas **(1)** to **(4)**:

(1) In the way of changes in the framing system.

(2) At end connections of primary supporting members or ordinary stiffeners.

(3) In way of the transition zones between the cargo region and fore and aft part and machinery space.

(4) In way of side and end bulkheads of superstructures.

2 Longitudinal members are to be arranged in such a way that structural continuity is maintained. Longitudinal members contributing to the longitudinal strength are to extend continuously as far as practicable towards fore and aft direction of the ship.

3 Primary supporting members are to be arranged in such a way that structural continuity is maintained. Abrupt changes of web heights or cross sections are to be avoided.

4 Stiffeners are to be arranged in such a way that structural continuity is maintained. Stiffeners contributing to longitudinal strength are to be continuous when crossing primary supporting members within the $0.4L_C$ amidships and as far as practicable outside $0.4\ L_C$ amidships. Where stiffeners are terminated in way of large openings and foundations, compensation is to be arranged to provide structural continuity in the way of the end connection.

5 Adequate consideration is to be given to the continuity in the thickness of shell plating and to avoiding remarkable differences between the thickness of the shell plating under consideration and that of the adjacent shell plating.

6 Butt welded joints of members having a difference in as-built thickness over 4 *mm* are generally to be tapered by not more than one-third at the end of the thicker plate.

7 Weld joints are to be avoided in areas with high stress concentration.

3.4.1.2 Consideration of Vibrations

Due consideration is to be given to vibration in the hull structure of ships.

3.4.1.3 Reinforcements at Knuckles

Knuckles are in general to be stiffened to achieve out-of-plane stiffness by fitting ordinary stiffeners or equivalent means in line with the knuckle.

3.4.2 Stiffeners

3.4.2.1 General*

1 Longitudinal stiffeners contributing to longitudinal strength are to be structurally continuous or to be connected at their ends in such a manner as to effectively uphold the sectional area and to have sufficient strength to withstand bending.

2 Where the angle between the web of stiffeners and the shell plating is extremely small, appropriate measures are to be taken as necessary to prevent tripping.

3 Struts provided on stiffeners are to be rolled sections other than flat bars or bulb sections and are to sufficiently overlap the webs of the stiffeners.

3.4.2.2 Spacing of Stiffeners

Stiffeners are to be provided at an appropriate spacing so as to effectively reinforce plating.

3.4.2.3 End Connections

1 Where continuity of strength of longitudinal members is provided by brackets, the alignment of the brackets on each side of the primary supporting member is to be ensured, and the scantlings of the brackets are to be such that the combined stiffener/bracket section modulus and effective cross sectional area are not less than those of the member.

2 At bracketed end connections, continuity of strength is to be maintained at the stiffener connection to the bracket and at the connection of the bracket to the supporting member.

3 The arrangement of the connection between the stiffener and the bracket is to be such that at no point in the connection, is the section modulus to be less than that required for the stiffener.

4 Where bracketed end connections of stiffeners are made to members, such as bulkheads, decks or tank top, effective supporting members are to be attached to the opposite side of such members to provide appropriate reinforcement thereto.

3.4.3 Primary Supporting Members

3.4.3.1 General

Where the angle between the web of primary supporting members and the shell plating is extremely small, appropriate measures are to be taken as necessary to prevent tripping.

3.4.3.2 End Connections

1 Brackets or equivalent structures are to be provided at ends of primary supporting members. End brackets likely to be subject

to high stress concentration are generally to be soft-toed.

2 Where the ends of primary supporting members are connected to members such as bulkheads, decks or tank top, effective supporting members are to be attached to the opposite side of such members to provide appropriate reinforcement thereto.

3.4.3.3 Web Stiffeners

1 Primary supporting members are to be appropriately reinforced by web stiffeners to prevent buckling.

2 Primary supporting members penetrated by longitudinals are to be appropriately reinforced by web stiffeners to prevent stress concentration around the penetrations. However, where the load transmitted by a longitudinal is small, this reinforcement may be dispensed with as appropriate.

3.4.3.4 Depth of Girders

The depth of girders is not to be less than 2.5 times the depth of slots for stiffener penetration, except where the slots are provided with collar plates.

3.4.4 Shell Plating

3.4.4.1 Local Reinforcement of Shell Plating

All openings in the shell plating are to have well-rounded corners and are to be reinforced as necessary. The reinforcement of openings is to be made in accordance with the following **(1)** to **(3)**:

(1) Openings in shell plating of 300 *mm* or more in size are to be reinforced by doubler or thicker plating.

(2) In the fore and aft peaks, suitable modifications may be made to the reinforcement of openings.

(3) The radius *R* at the corners of openings is to be at least 100 *mm*.

3.4.5 Openings

3.4.5.1 Slots*

1 Slots for the passage of stiffeners through the web of primary supporting members, and the related collaring arrangements, are to be designed to minimise stress concentrations around the perimeter of the opening and on the attached web stiffeners.

2 The total depth of slots without a collar plate is to be not greater than 50 % of the depth of the primary supporting member.

3.4.5.2 Openings in Stiffeners

Openings and scallops are to be kept at least 200 *mm* clear of the toes of end brackets, end connections and other areas of high stress concentration, measured along the length of the stiffener toward the mid-span, and 50 *mm* measured along the length in the opposite direction (*See* **Fig. 3.4.5-1**). In areas where the shear stress is less than 60 % of the permissible stress, alternative arrangements may be accepted.

Fig. 3.4.5-1 Location of Air and Drain Holes

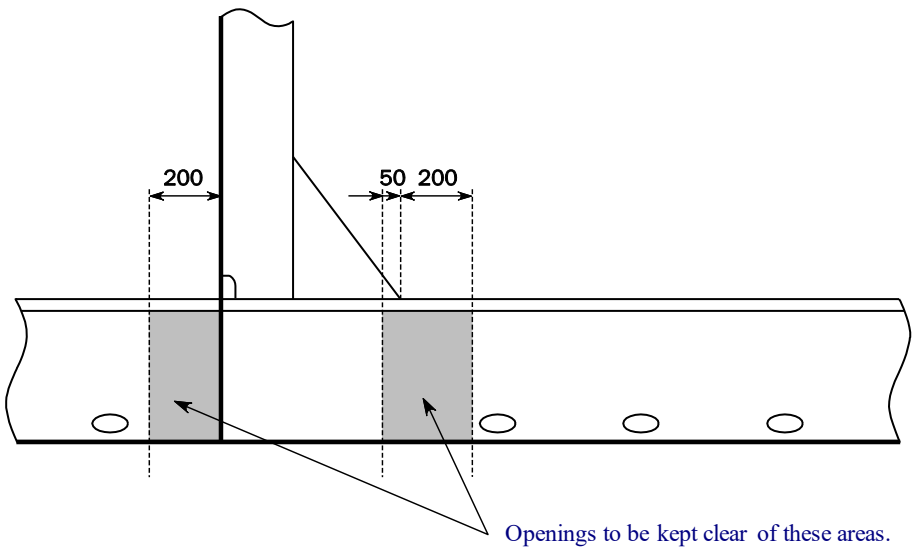

3.4.5.3 Openings in Primary Supporting Members

1 Manholes, lightening holes and other similar openings are to be avoided in way of concentrated loads and areas of high shear. In particular, manholes and similar openings are to be avoided in high stress areas unless the stresses in the plating and the panel buckling strength have been calculated and found satisfactory. Examples of high stress areas include:

(1) Vertical or horizontal diaphragm plates in narrow cofferdams/double plate bulkheads within one-sixth of their length from either end

(2) Floors or double bottom girders close to their span ends

(3) Primary supporting member webs in way of end bracket toes

(4) Above the heads and below the heels of pillars

2 Where an opening with an unreinforced free edge is provided in the web of a primary supporting member, the size and location of the opening are generally to be as shown in **Fig. 3.4.5-2** unless the yield strength and buckling strength around the opening have been directly assessed and found satisfactory.

Fig. 3.4.5-2 Size and Location of Opening

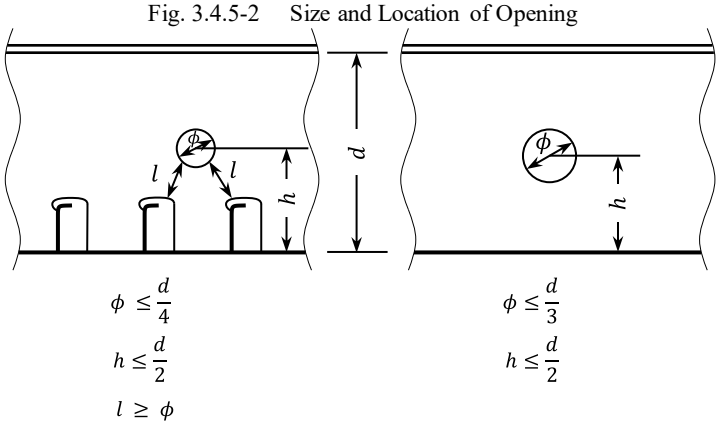

3.5 Minimum Requirements

3.5.1 Minimum Thicknesses

3.5.1.1 Shell Plating

1 The thickness of shell plating below the strength deck is not to be less than that obtained from the following formula:

$$t = 0.8\sqrt{\frac{235}{\sigma_Y}L_{C330}}\ (mm)$$

L_{C330}: As specified in **1.4.2.2**

σ_Y: Specified minimum yield stress (N/mm^2)

2 In ships whose distance between designed maximum load line and the strength deck is far larger, the thickness of side shell plating from a height twice the height h_s above the freeboard deck (or an imaginary freeboard deck in ships with an imaginary deck deemed as a freeboard deck) to the strength deck is to be not less than that obtained from the following formula. Here, "ships whose distance between designed maximum load line and the strength deck is far larger" refers to ships whose freeboard deck is lower than the strength deck. The height h_s means the standard height of superstructures as specified in **1.4.3.3**.

$$t = 0.56\sqrt{\left(\frac{235}{\sigma_Y}L_{C330} + 50\right)}\ (mm)$$

L_{C330}: As specified in **1.4.2.2**

σ_Y: Specified minimum yield stress (N/mm^2)

3.5.1.2 Double Bottom, Deep Tanks and Cargo Oil Tanks

1 The minimum thicknesses of girders, struts and their end brackets, bulkhead plates in double bottoms, ballast tanks and tanks carrying liquids within the cargo region are to be in accordance with **Table 3.5.1-1**.

2 Except for the members specified in **-1** above, no structural members in double bottoms, ballast tanks or tanks carrying liquids within the cargo region are to be less than 6 *mm* in thickness (gross scantling).

3.5.1.3 Structural Members within Cargo Region

1 The minimum thicknesses of girders, struts and their end brackets and bulkhead plates in the cargo region are to be in accordance with **Table 3.5.1-1**.

2 Except for the members specified in **-1** above, no structural members in the bulkhead and side structures within the cargo region are to be less than 6 *mm* in thickness (gross scantling).

Table 3.5.1-1 Minimum Thicknesses

Ship length (m)		≥	90	105	120	135	150	165	180	195
		<	105	120	135	150	165	180	195	
Thickness (mm)	Double bottoms, ballast tanks, and tanks carrying liquids within the cargo region	Girders, struts and their end brackets and bulkhead plates	5.5	6	6.5	7	7.5	8	8.5	9
		Structural members other than the above	6.0 (gross)							
	Within the cargo region	Girders, struts and their end brackets and bulkhead plates	4.5	5	5.5	6	6.5	7	7.5	8
		Structural members other than the above	6.0 (gross)							

3.5.2 Slenderness Requirements

3.5.2.1 Application

1 All structural members are to meet the slenderness requirements specified in **3.5.2**, except for those listed below:

- Bilge plates within the cylindrical part of the ship and the radius gunwale
- Structure members in superstructures and deck houses in cases where such members do not contribute to longitudinal strength.

Pillars in superstructures and deckhouses are to comply with the applicable slenderness and proportion requirements specified in **3.5.2**.

2 Where structural members are deemed by the Society as having an effectiveness equivalent to those compliant with **3.5.2**, such members are to be deemed compliant with **3.5.2**.

3 Notwithstanding **-1** above, thickness of shell plating, deck, bulkhead and web of girder and stiffness of stiffener need not to comply with **3.5.2**, provided that buckling strength requirements specified in **5.3** and **8.6.2**, if applicable, are satisfied.

3.5.2.2 Thickness of Various Structural Members

1 The thickness t (mm) of various structural members is to satisfy the following criteria:

$$t \geq \frac{b}{C}\sqrt{\frac{\sigma_Y}{235}}$$

b: For plating, b is to be taken as the plate breadth (mm)

For webs, b is to be taken as the web depth (mm). However, where the stiffener is provided on the web, b may be taken as the maximum breadth taking the stiffener into account.

For face plates, b is to be taken as the half breadth of the face plate (mm)

For circular section pillars, b is to be taken as their mid-thickness radius (mm)

C: Slenderness coefficient as specified in **Table 3.5.2-1**

Table 3.5.2-1 Slenderness Coefficients

Type of structural member	C
Shell plating	100
Upper decks	
Inner bottom plating	
Girder webs	
Watertight(1) and non-tight bulkheads	125
Watertight decks(1)	
Non-watertight decks within cargo hold regions	
Non-watertight decks outside cargo hold regions	150
Angles and T-section stiffener webs	75
Webs of bulb sections	45
Webs of pillars	35
Flat bars	22
Face plates of stiffeners and girders	15
Face plates of pillars	12
Circular section pillars	50

Note:
(1) This includes deep tank boundaries.

2 For b specified in **-1** above, the web depth, the half breadth of the face plate and the mid-thickness radius of circular section pillars are to be gross scantling values.

3.5.2.3 Face Plate Width of Stiffeners

1 The standard face plate width of stiffener is to be not less than 0.2 times the web depth.

2 The face plate width and web depth specified in **-1** above are to be based on the gross scantling approach.

3.5.2.4 Stiffness of Stiffeners

The scantlings of stiffeners are to comply with one of the following requirements **(1)** to **(3)** as applicable depending on the structure:

(1) For longitudinal stiffeners

The value of the moment of inertia I_{st} (cm^4) is to satisfy the following expression:

$$I_{st} \geq 1.43\ell^2 A_{eff}\frac{\sigma_Y}{235}$$

A_{eff}: Sectional area (cm^2) of stiffeners with attached plating, taking into account the effective breadth specified in **3.6.3**

σ_Y: Specified minimum yield stress (N/mm^2) of attached plating

(2) For non-longitudinal stiffeners attached to watertight members

The value of the moment of inertia I_{st} (cm^4) is to satisfy the following expression:

$$I_{st} \geq 0.72\ell^2 A_{eff}\frac{\sigma_Y}{235}$$

A_{eff}: Sectional area (cm^2) as specified in **(1)** above

σ_Y: Specified minimum yield stress (N/mm^2) as specified in **(1)** above

(3) For non-longitudinal stiffeners attached to a non-watertight member

The value of the moment of inertia I_{st} (cm^4) is to satisfy **(2)** above. However, in the case of flat bar stiffeners, it is also acceptable if gross scantling depth h_{w-gr} (mm) satisfies the following:

$$h_{w-gross} \geq \frac{\ell}{12} \times 10^3$$

3.5.2.5 Tripping Brackets on Primary Supporting Members

1 Arrangement and spacing

The spacing between tripping brackets on primary supporting members S_b (m) is to satisfy the following expression, where S_b need not be less than S_{b-min}:

$$S_b \leq b_f C \sqrt{\frac{A_{f-n50}}{A_{f-n50} + \frac{A_{w-n50}}{3}} \frac{235}{\sigma_Y}}$$

C: Slenderness coefficient taken as follows:

$C = 0.022$ for symmetrical flanges of primary supporting members

$C = 0.033$ for asymmetrical flanges of primary supporting members

b_f: Flange breadth (mm) of primary supporting members

A_{f-n50}: Net cross-sectional area (cm^2) of flanges of primary supporting members

A_{w-n50}: Net cross-sectional area (cm^2) of webs of primary supporting members

σ_Y: Specified minimum yield stress (N/mm^2) of primary supporting members

S_{b-min}: Minimum unsupported flange length (m) of primary supporting members taken as follows:

$S_{b-min} = 3.0$ (m) For the cargo tank/hold region, on tank/hold boundaries or the hull envelope including exposed decks

$S_{b-min} = 4.0$ (m) For other areas

2 Tripping brackets on primary supporting members are to be stiffened by a flange or an edge stiffener if the effective length of the free edge l_b (mm) as given in **Table 3.5.2-2** is greater than the following:

$l_b = 75t_b$

t_b: Bracket web thickness (mm)

3.5.2.6 End Brackets

The web thickness t_b (mm) of end brackets subject to compressive stress is to satisfy the following expression:

$$t_b \geq \frac{d_b}{C} \sqrt{\frac{\sigma_Y}{235}}$$

d_b: Bracket depth (mm) as specified in **Table 3.5.2-2**

C: Slenderness coefficient as specified in **Table 3.5.2-2**

σ_Y: Specified minimum yield stress (N/mm^2) of the end bracket material

3.5.2.7 Edge Reinforcement

The depth of the stiffener web of edge stiffeners in way of bracket edges is not to be less than the following:

$$h_w = \max\left(50, C l_b \sqrt{\frac{\sigma_Y}{235}}\right) \ (mm)$$

C: Slenderness coefficient taken as follows:

$C = 0.075$ For end brackets

$C = 0.05$ For tripping brackets

σ_Y: Specified minimum yield stress (N/mm^2) of the stiffener material

3.5.2.8 Proportions of edge stiffeners

The thickness of the web plate and flange of the edge stiffener is to satisfy the requirements specified in **3.5.2.2** and **3.5.2.3**.

Table 3.5.2-2 Buckling Coefficient C for Proportions of Brackets

Mode	C
Brackets without edge stiffener 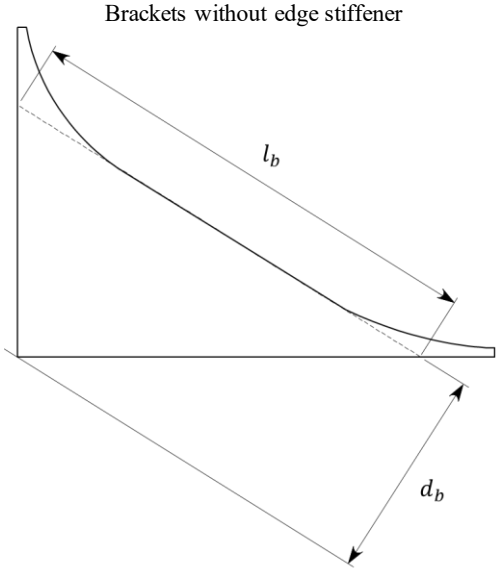	$C = 20\left(\frac{d_b}{l_b}\right) + 16$ where $0.25 \leq \frac{d_b}{l_b} \leq 1.0$
Brackets with edge stiffener 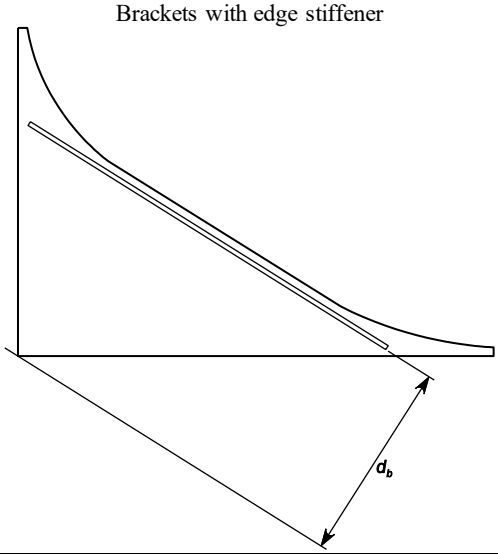	$C = 70$

3.5.2.9 Edge Reinforcement in Way of Openings

1 The depth of web h_{w-gr} (mm) of edge stiffeners fitted in way of openings (*See* **Fig. 3.5.2-1**) is to satisfy the following expression:

$$h_{w-gr} \geq \max\left(50, 0.05l\sqrt{\frac{\sigma_Y}{235}}\right)$$

l: Length of edge stiffener in way of opening as defined in **Fig. 3.5.2-1** (m)

2 The thickness of the web and flange of the edge stiffener is to satisfy the requirements specified in **3.5.2.2** and **3.5.2.3**.

Fig. 3.5.2-1 Typical Edge Reinforcements

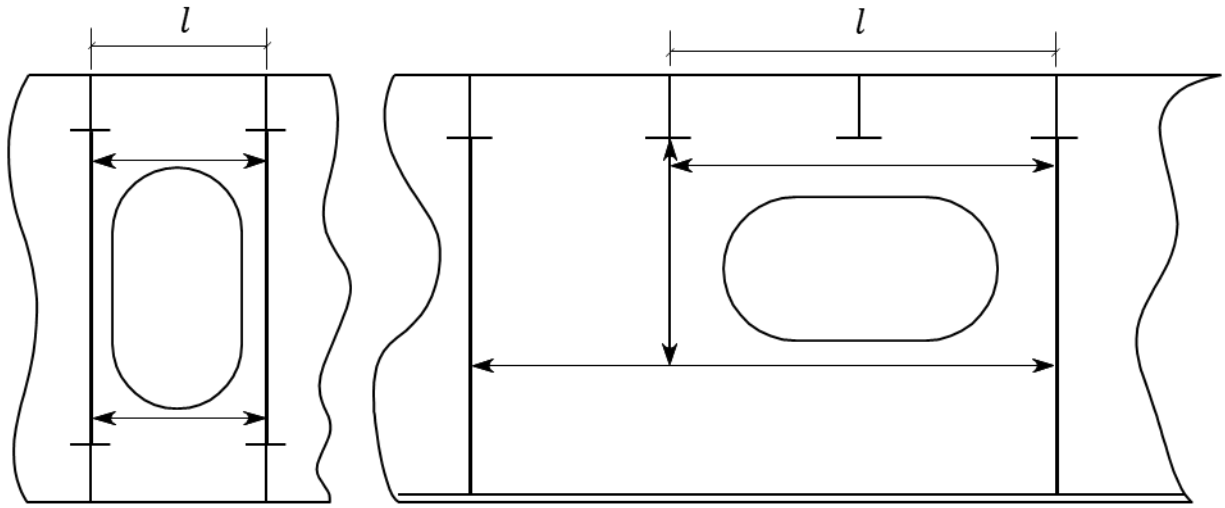

3.6 Idealisation of Stiffeners and Primary Supporting Members

3.6.1 Effective Span

3.6.1.1 General

1 This subsection **3.6.1** specifies the effective spans of stiffeners and girders.

2 The effective spans of structural arrangements not specified in **3.6.1** are to be deemed appropriate by the Society.

3 For curved stiffeners and girder, the span is defined as the chord length between span points to be measured at the flange for stiffeners and girder (if flanges are attached), and at the free edge for flat bar stiffeners.

3.6.1.2 Effective Bending Span of Stiffeners

1 The effective bending span ℓ_{bdg} of stiffeners is to be as specified in **Fig. 3.6.1-1** for single skin structures and **Fig. 3.6.1-2** for double side structures. For deck longitudinals or longitudinals on shell plating of structures other than double side structures, ℓ_{bdg} may be in accordance with **Fig. 3.6.1-1**.

2 In single skin structures, the effective bending span ℓ_{bdg} of a stiffener supported by a bracket or by a web stiffener on one side only of the primary supporting member web is to be taken as the total span between primary supporting members (*See* **Fig. 3.6.1-1 a)**).

3 Brackets fitted on the side opposite to that of the stiffener with respect to attached plating are not to be considered in reducing the effective bending span.

Fig. 3.6.1-1 Effective Bending Span of Stiffeners (Single Skin Construction)

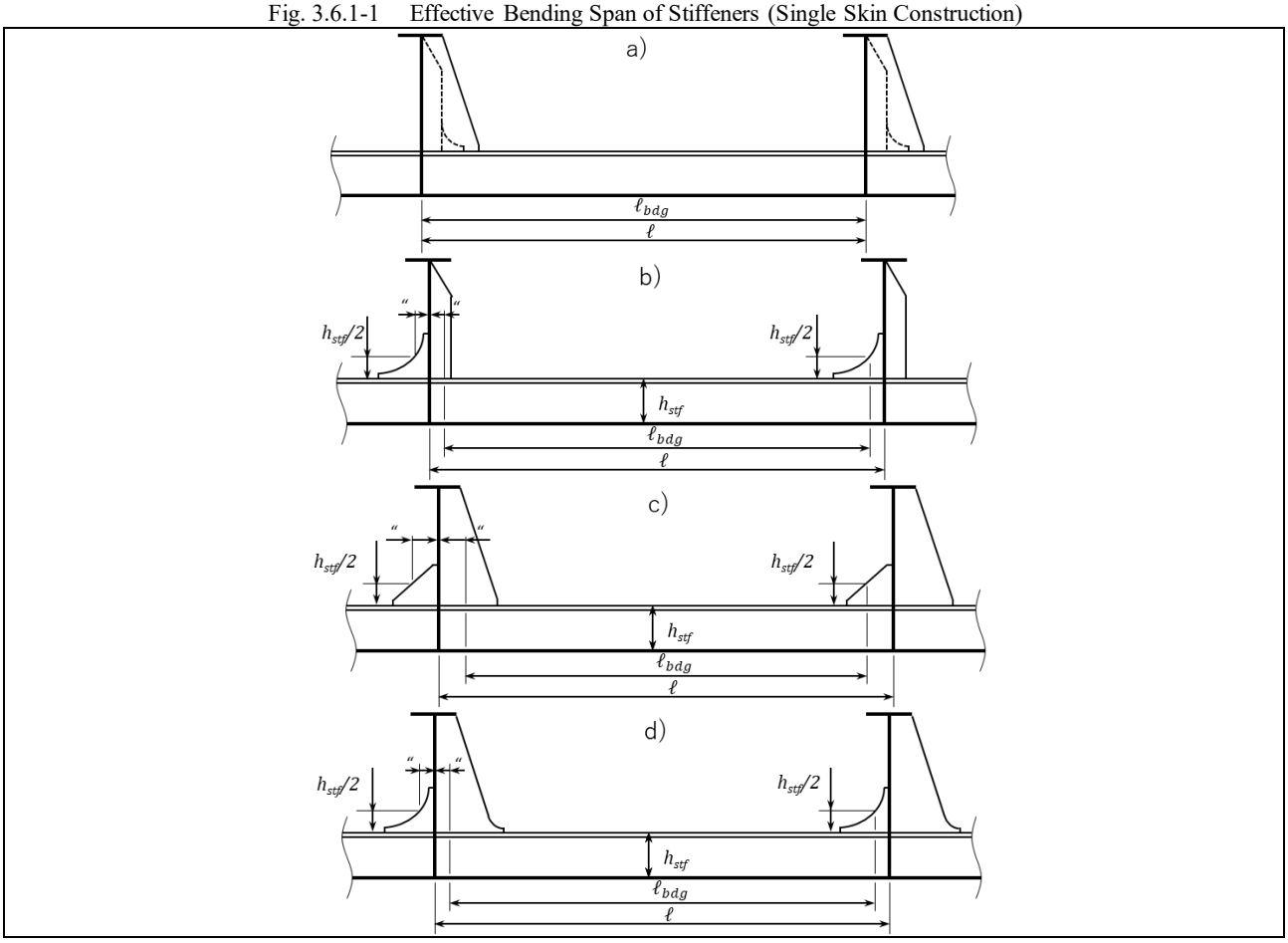

Fig. 3.6.1-2 Effective Bending Span of Stiffeners (Double Skin Construction)

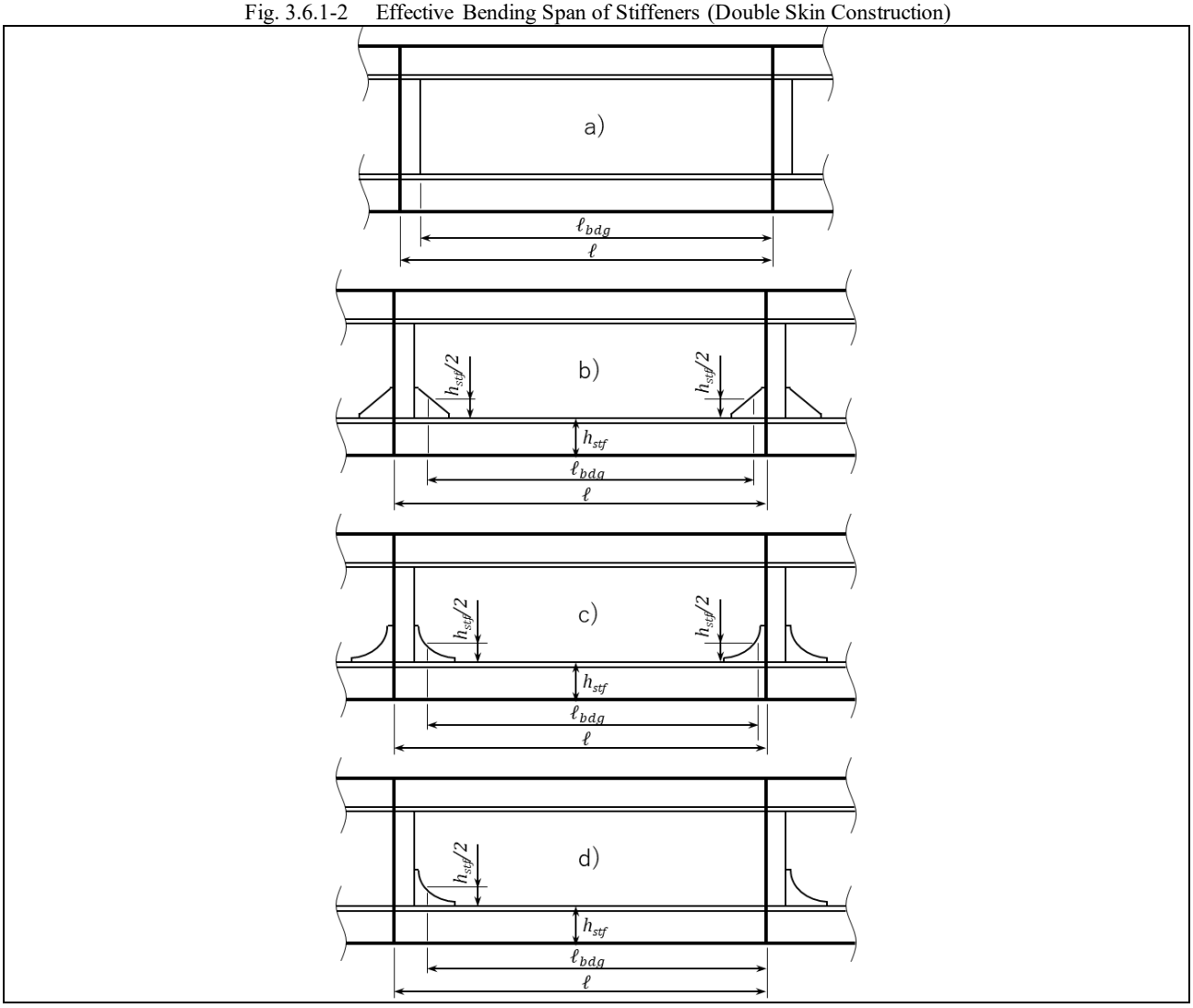

3.6.1.3 Effective Shear Span of Stiffeners

1 The effective shear span ℓ_{shr} of stiffeners is to be as specified in **Fig. 3.6.1-3** for single skin structures and **Fig. 3.6.1-4** for double side structures. For deck longitudinals or longitudinals on shell plating of structures other than double side structures, ℓ_{shr} may be in accordance with **Fig. 3.6.1-3**.

2 Regardless of support detail, the effective shear span ℓ_{shr} (m) need not be greater than the value obtained from the following formula (the full length of the stiffener may be reduced by a minimum of $s/4000$ (m) at each end of the member):

$$\ell_{shr} = \ell - \frac{s}{2000}$$

ℓ: Full length (m) of the stiffener

s: Spacing (mm) between stiffeners

3 For curved and/or long brackets (high length/height ratio), the effective bracket length is to be taken as the maximum inscribed 1.5:1 right-angled triangle (*See* **Figs. 3.6.1-3 c)** and **3.6.1-4 c)**).

Fig. 3.6.1-3 Effective Shear Span of Stiffeners (Single Skin Construction)

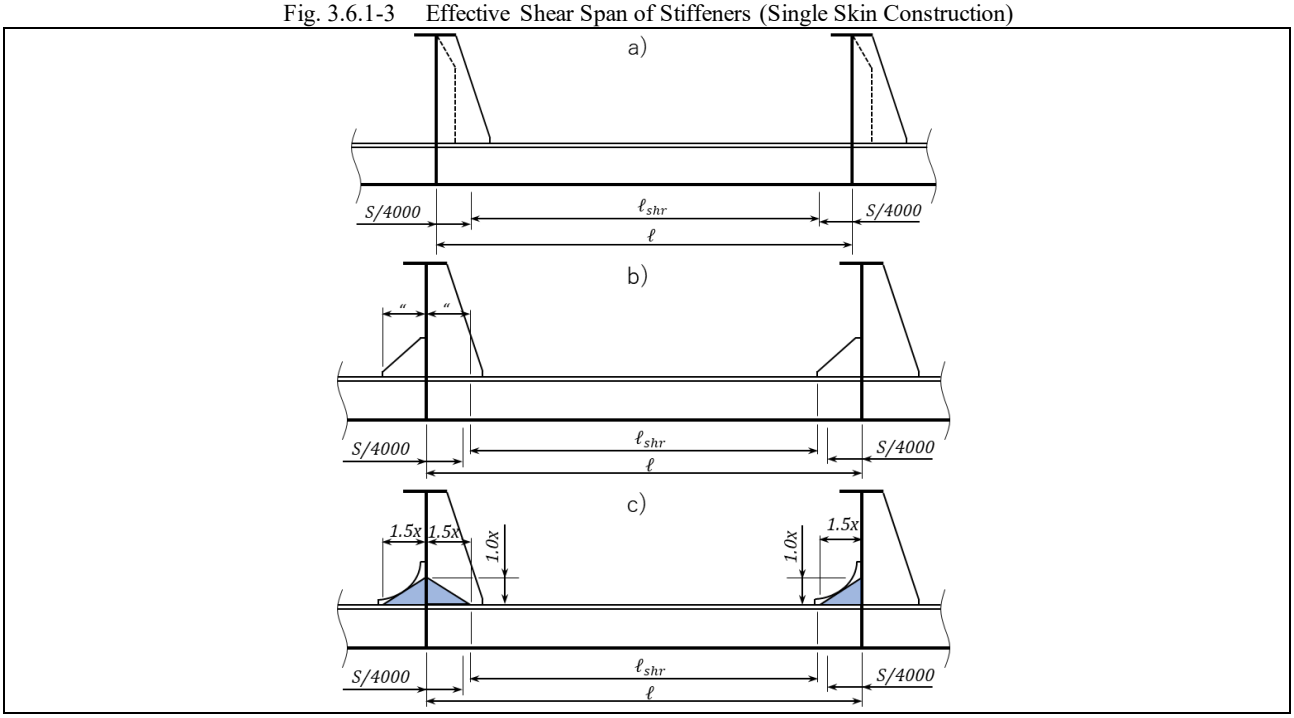

Fig. 3.6.1-4 Effective Shear Span of Stiffeners (Double Skin Construction)

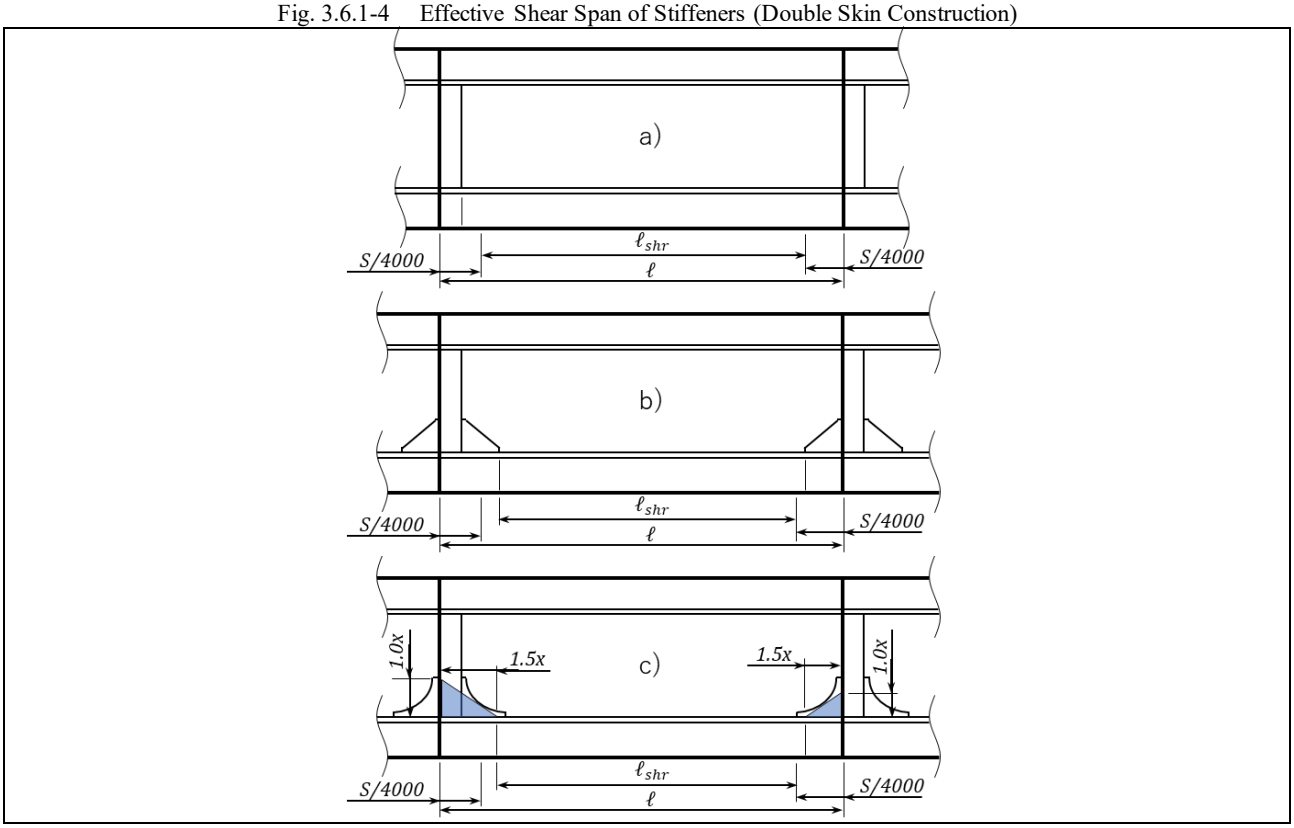

3.6.1.4 Effective Bending Span of Primary Supporting Members

1 The effective bending span ℓ_{bdg} of a primary supporting member is to be as specified in **Fig. 3.6.1-5**.

2 The effective bending span ℓ_{bdg} (m) of a primary supporting member without end bracket is to be taken as the length of the member between supports.

3 The effective bending span ℓ_{bdg} (m) of a primary supporting member with end bracket is to be taken between the points where the depth of the effective bracket is equal to half the web height of the primary supporting member (*See* **Fig. 3.6.1-5 b)**). The effective bracket is defined as the maximum size of a right-angled triangular bracket with a length to height ratio of 1.5 that fits inside

the fitted bracket. *See* **Fig. 3.6.1-5 b)** for examples.

4 In case of brackets where the face plate of the primary supporting member is continuous along face of the bracket, as shown in **Fig. 3.6.1-5 a), c)** and **d)**, the effective bending span ℓ_{bdg} (m) is taken between points where the depth of the effective bracket or the fitted bracket is equal to one quarter the web height of the primary supporting member (hereinafter, "height $h_w/4$").

5 For straight brackets with a length to height ratio greater than 1.5, the effective bending span is to be taken to the height $h_w/4$ at the effective bracket. For straight brackets with a length to height ratio less than 1.5, the effective bending span is to be taken to the height $h_w/4$ at the fitted bracket as shown in **Fig. 3.6.1-5 c)** and **d)**.

6 For curved brackets, where the tangent point between the fitted bracket and effective bracket is above the height $h_w/4$, the effective bending span is to be taken to the height $h_w/4$ at the fitted bracket. Where the tangent point between the fitted bracket and effective bracket is below the height $h_w/4$, the effective bending span is to be taken to the height $h_w/4$ at the effective bracket as shown in **Fig. 3.6.1-5 a)**.

7 For structural arrangements where the primary supporting member face plate is carried on to the bracket and backing brackets are fitted, the effective bending span need not be taken greater than to the position where the total depth reaches twice the depth of the primary supporting member. Arrangements with small and large backing brackets are shown in **Fig. 3.6.1-5 e)** and **f)**.

8 For arrangements where the height of the primary supporting member is sufficiently maintained and the face plate width is increased towards the support, the effective bending span may be taken to a position where the face plate breadth reaches twice the nominal breadth.

3.6.1.5 Effective Shear Span of Primary Supporting Members

1 The effective shear span ℓ_{shr} of a primary supporting member is to be as specified in **Fig. 3.6.1-6**.

2 The effective shear span of a primary supporting member may be taken between the toes of the effective brackets supporting the primary supporting member, where the toes of the effective brackets are as shown in **Fig. 3.6.1-6**. The effective bracket used here is given in **3.6.1.4-3**.

3 For arrangements where the effective backing bracket is larger than the effective bracket in way of the face plate, the effective shear span is to be taken as the mean distance between toes of the effective brackets as shown in **Fig. 3.6.1-6 f)**.

Fig. 3.6.1-5 Effective Bending Span of Primary Supporting Member

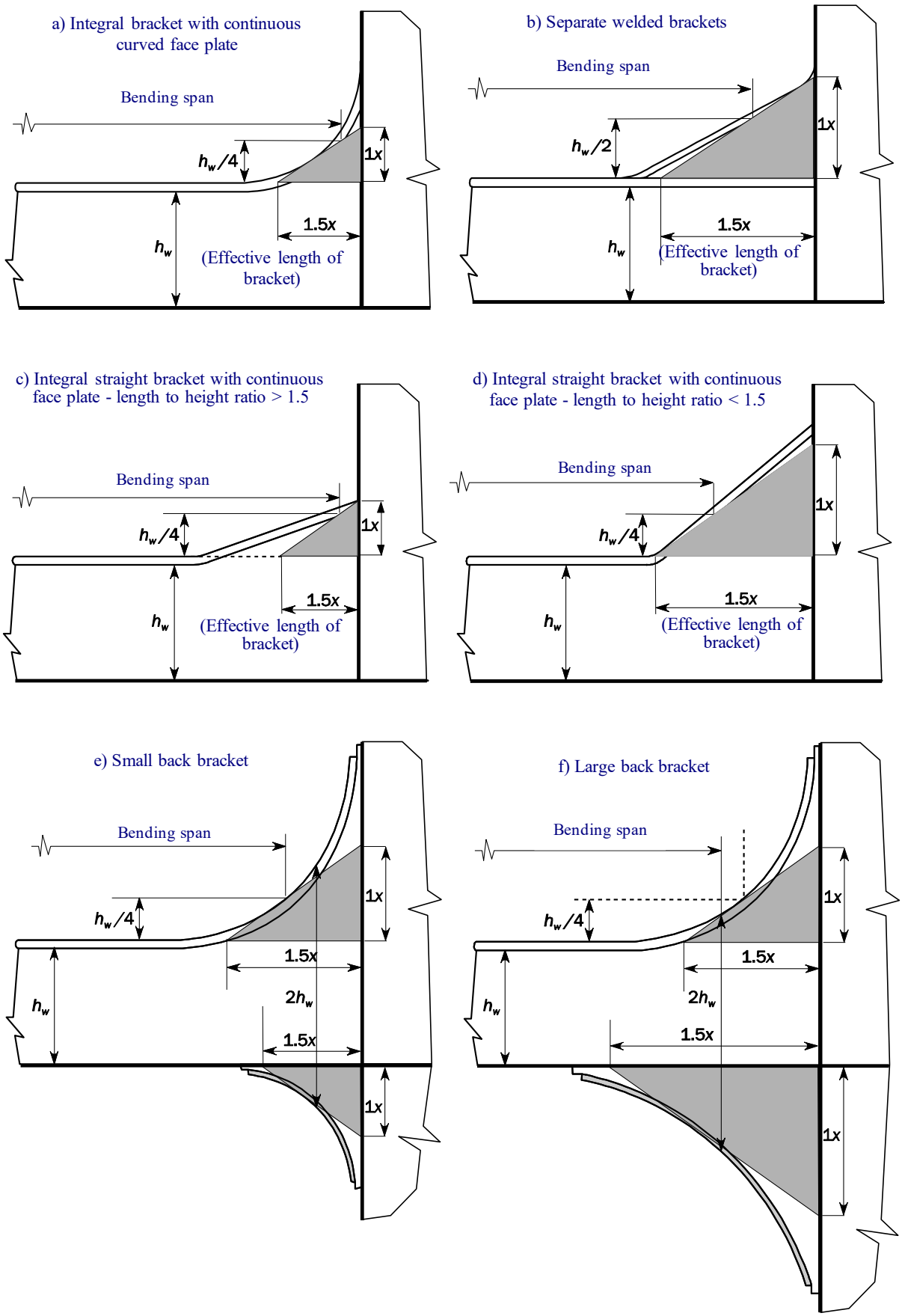

Fig. 3.6.1-6 Effective Shear Span of Primary Supporting Member

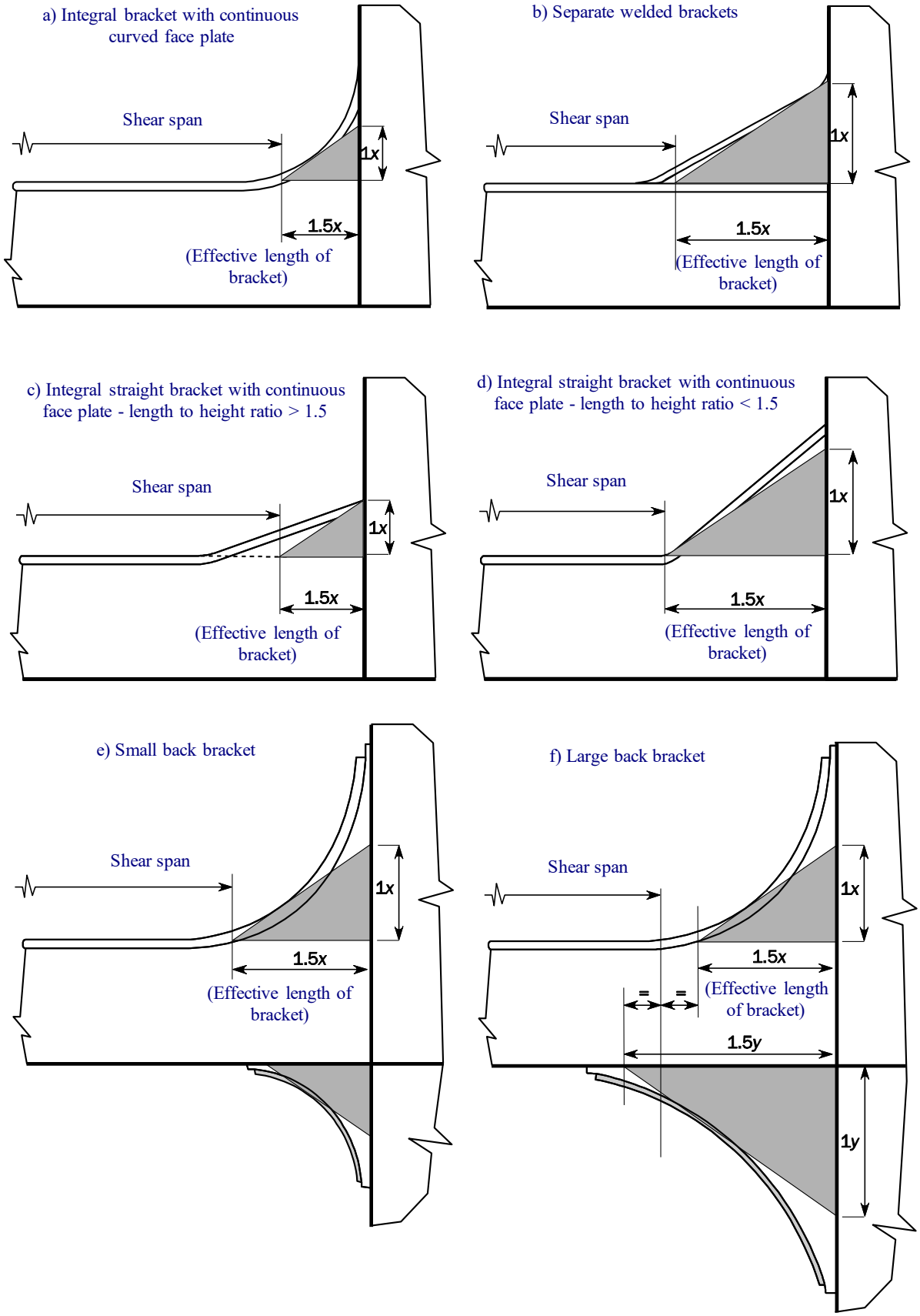

3.6.1.6 Primary Supporting Members Fitted on Sloped Surfaces, Etc.

1 For arrangements where a primary supporting member is fitted, for example, on a sloped surface and its length is different on the attached plating side and face plate side, the full length ℓ of the member in question is to be the distance between supports

positioned at $h_w/2$.

2 Where the member in question is fitted with a bracket, the effective bending span and the effective shear span are to be in accordance with **3.6.1.4** and **3.6.1.5**, assuming an effective bracket with one edge being the line perpendicular to the line connecting the supports of that member, as shown in **Fig. 3.6.1-7**.

Fig. 3.6.1-7 Typical Effective Brackets for Primary Supporting Members Fitted on Sloped Surface, Etc.

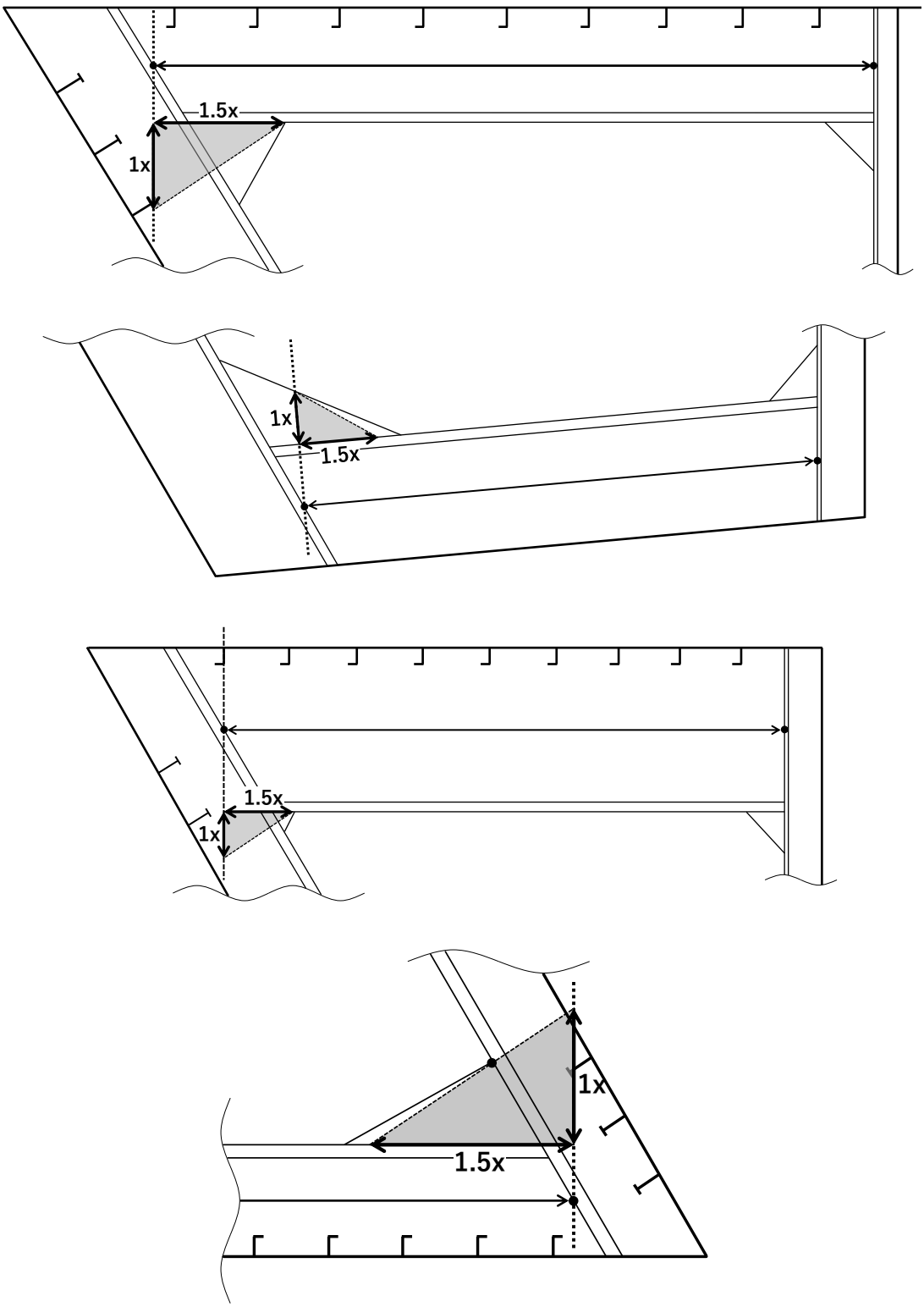

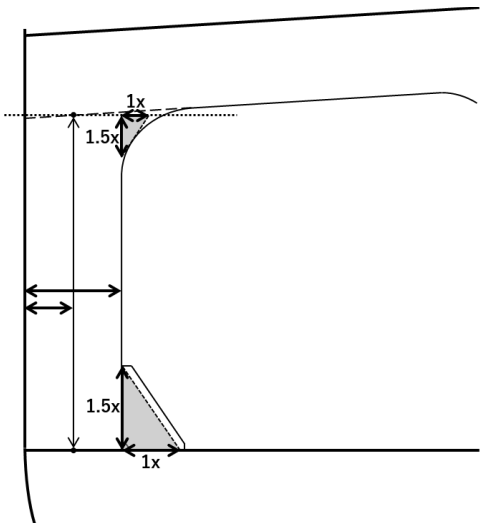

3.6.2 Spacing and Load Supporting Breadth

3.6.2.1 Stiffeners

Stiffener spacing s (mm) for the calculation of the effective attached plating of stiffeners is to be taken as the mean spacing between adjacent stiffeners and taken equal to the following formula (*See* **Fig. 3.6.2-1**):

$$s = \frac{b_1 + b_2 + b_3 + b_4}{4}$$

Where:

b_1, b_2, b_3, b_4: Spacing (mm) between stiffeners at ends

3.6.2.2 Primary Supporting Members

Primary supporting member spacing S (m) for the calculation of the effective attached plating of primary supporting members is to be taken as the mean spacing between adjacent primary supporting members and taken equal to the following formula (*See* **Fig. 3.6.2-1**):

$$S = \frac{b_1 + b_2 + b_3 + b_4}{4} \times 10^{-3}$$

Where:

b_1, b_2, b_3, b_4: Spacing (mm) between primary supporting members at ends

3.6.2.3 Spacing of Curved Plating

For curved plating, the stiffener spacing or primary supporting member spacing (s or S) is to be measured on the mean chord between adjacent members.

Fig. 3.6.2-1 Spacing of Plating

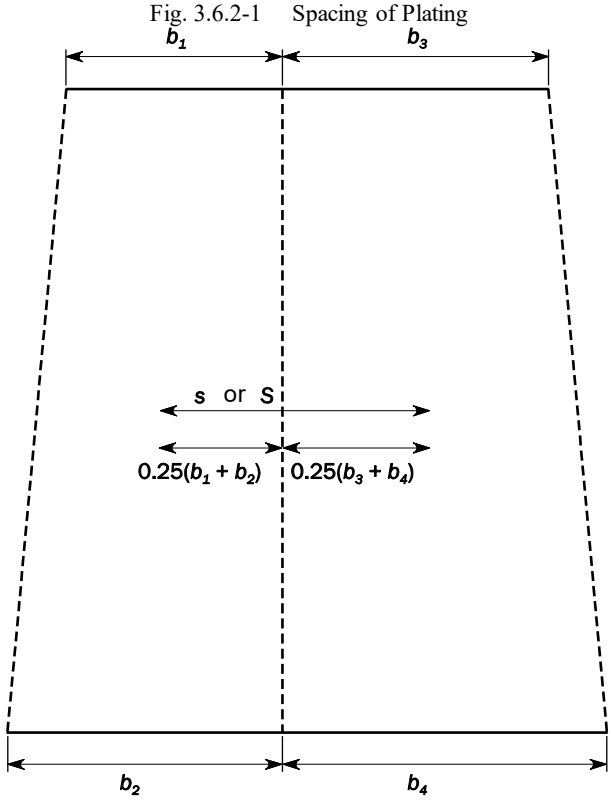

3.6.3 Effective Breadth

3.6.3.1 Effective Breadth of Attached Plating for Stiffeners and Primary Supporting Members

1 Unless otherwise specified, the effective breadth (mm) used to calculate the section modulus and moment of inertia for stiffeners and primary supporting members is to be obtained in accordance with the following **(1)** to **(3)** where ℓ is the length (m) of the member as specified in the applicable requirements:

(1) Where the plating extends on both sides of the member: 200ℓ or the spacing, whichever is lesser.

(2) Where the plating extends on one side of the member: 100ℓ or half the spacing to the adjacent member, whichever is lesser.

(3) For a cantilever member: 300ℓ or spacing, whichever is lesser.

2 Where stiffeners are provided within the effective breadth specified in **-1** above, they may be included in the calculation of the actual moment of inertia and section modulus of girders.

3.6.4 Shear Area, Effective Shear Depth, Section Modulus and Moment of Inertia for Stiffeners and Primary Supporting Members

3.6.4.1 Shear Area of Stiffeners

The shear area A_{shr} (cm^2) of stiffeners is to be taken as:

$A_{shr} = d_{shr} t_w 10^{-2}$

d_{shr}: Effective shear depth (mm) of stiffener as specified in **3.6.4.2**

t_w: Web thickness (mm) of stiffener as specified in **Fig. 3.3.3-1**

3.6.4.2 Effective Shear Depth of Stiffeners

The effective shear depth d_{shr} (mm) of stiffeners is to be taken as:

$d_{shr} = (h_{stf} - 0.5t_{c-stf} + t_p + 0.5t_{c-pl})\sin\phi_w$

h_{stf} Height (mm) of stiffener as specified in **Fig. 3.3.3-1**

t_p: Thickness (mm) of the stiffener attached plating as specified in **Fig. 3.3.3-1**

t_{c-stf}: Corrosion addition (mm) of considered stiffener as given in **3.2.5**

t_{c-pl}: Corrosion addition (mm) of attached plate of the stiffener considered as specified in **3.2.5**

ϕ_W: Angle (deg) as specified in **Fig. 3.6.4-1**. ϕ_W is to be taken as 90 *degrees* if the angle is greater than or equal to 75 *degrees*

3.6.4.3 Section Modulus and Moment of Inertia of Stiffeners

The section modulus Z (cm^3) and moment of inertia (cm^4) of stiffeners are to be taken as:

$Z = Z_{stf}\sin\phi_W$

$I = I_{st}\sin^2\phi_W$

Z_{stf}:Section modulus (cm^3) of stiffener, considered perpendicular to its attached plating, i.e. with $\phi_W = 90$ *deg*

I_{st}: Moment of inertia (cm^4) of stiffener, considered perpendicular to its attached plating, i.e. with $\phi_W = 90$ *deg*

ϕ_W: Angle (*deg*) between stiffener web and attached plating as specified in **Fig. 3.6.4-1**. ϕ_W is to be taken as 90 *degrees* if the angle is greater than or equal to 75 *degrees*

Fig. 3.6.4-1 Angle Between Stiffener Web and Attached Plating

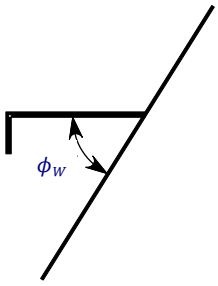

3.6.4.4 Shear Area of Primary Supporting Members

The shear area A_{sh-n50} (cm^2) of primary supporting members is to be taken as:

$A_{sh-n50} = 10D_{sh-n50}t_{w-n50}$

D_{sh-n50}: Effective shear depth (m) of primary supporting member as specified in **3.6.4.5**

t_{w-n50}: Web thickness (mm) of primary supporting member

3.6.4.5 Effective Shear Depth of Primary Supporting Members

The effective shear depth D_{sh-n50} (m) of primary supporting members is to be taken as:

$D_{sh-n50} = (h_w - d_{OP} + t_{f-n50} + t_{p-n50})\sin\phi_W \times 10^{-3}$

h_W: Web height (mm) of primary supporting member

d_{OP}:Depth (mm) of the opening or slot

t_{f-n50}: Thickness (mm) of face plate

t_{p-n50}: Thickness (mm) of attached plating

ϕ_W: Angle (*deg*) between the primary supporting member web and the attached plating. ϕ_W is to be taken as 90 *degrees* if the angle is greater than or equal to 75 *degrees*

3.6.4.6 Section Modulus and Moment of Inertia of Primary Supporting Members

The section modulus Z_{n50} (cm^3) and moment of inertia, I (cm^4), of a primary supporting member are to be taken as:

$Z_{n50} = Z_{perp-n50}\sin\phi_W$

$I_{n50} = I_{perp-n50}\sin^2\phi_W$

$Z_{perp-n50}$: Actual section modulus (cm^3) of the primary supporting member, including its attached plating assumed to be perpendicular thereto

$I_{perp-n50}$: Actual moment of inertia (cm^4) of the primary supporting member, including its attached plating assumed to be perpendicular thereto

ϕ_W: Angle (*deg*) between the primary supporting member web and the attached plating. ϕ_W is to be taken as 90 *degrees* if the angle is greater than or equal to 75 *degrees*

3.6.5 Bulb Sections

3.6.5.1 Stiffener Profile

1 The properties of bulb profile sections are to be determined by direct calculations.

2 Where direct calculation of properties is difficult, a bulb section may be taken equivalent to a built-up section. The scantlings (mm) of the equivalent built-up section are to be obtained from the following formulae:

$$h_w = h'_w - \frac{h'_w}{9.2} + 2$$

$$b_f = \alpha\left(t'_w + \frac{h'_w}{6.7} - 2\right)$$

$$t_f = \frac{h'_w}{9.2} - 2$$

$$t_w = t'_w$$

h'_w, t'_w: Height and thickness (mm) of a bulb section (*See* **Fig. 3.6.5-1**)

α: Coefficient equal to:

$$\alpha = 1.1 + \frac{(120 - h'_w)^2}{3000} \quad \text{for } h'_w \leq 120$$

$$\alpha = 1.0 \quad \text{for } h'_w > 120$$

Fig. 3.6.5-1 Dimensions of Stiffeners

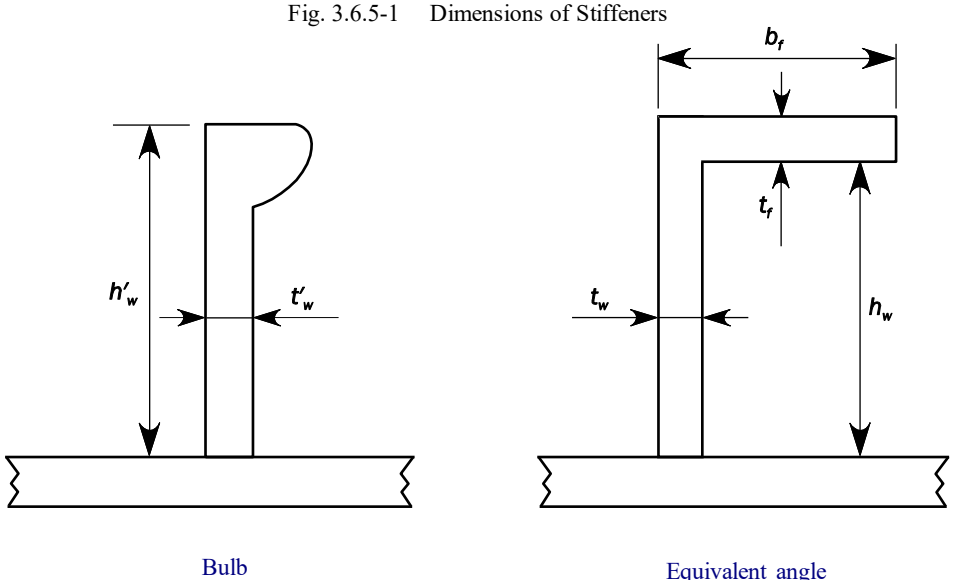

3.7 Load Calculation Point

3.7.1 Plating

3.7.1.1 Elementary Plate Panel (EPP)

An elementary plate panel (*EPP*) is the unstiffened part of the plating between stiffeners and/or primary supporting members. The plate panel length a and breadth b of the *EPP* are defined, respectively, as the longest and shortest plate edges, as shown in **Fig. 3.7.1-1**.

Fig. 3.7.1-1 Elementary Plate Panel (*EPP*) Definition

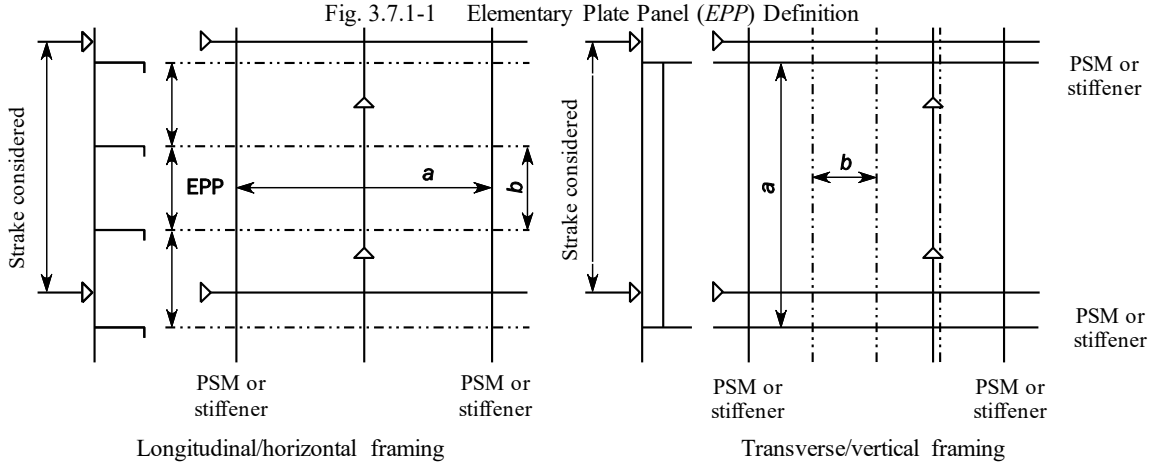

3.7.1.2 Strake Required Thickness

1 The required thickness of a plate strake is to be taken as the greatest value required for each *EPP* within that strake. The requirements given in **Table 3.7.1-1** are to be applied for the selection of strakes to be considered as shown in **Fig. 3.7.1-2**.

2 The maximum corrosion addition within a strake is to be applied according to the requirements in **3.3.5.3-1**.

Table 3.7.1-1 Strake Considered in a Given *EPP*

	$a/b > 2$	$a/b \leq 2$
$a_1 > b/2$	All strakes ($St1$, $St2$, $St3$, $St4$)	All strakes ($St1$, $St2$, $St3$, $St4$)
$a_1 \leq b/2$	Strakes $St2$ and $St4$	All strakes ($St1$, $St2$, $St3$, $St4$)
a_1: Distance (mm) measured inside the considered strake in the direction of the longer edge of the *EPP*, between the strake boundary weld seam and the *EPP* edge.		

Fig. 3.7.1-2 Strake Considered in a Given *EPP*

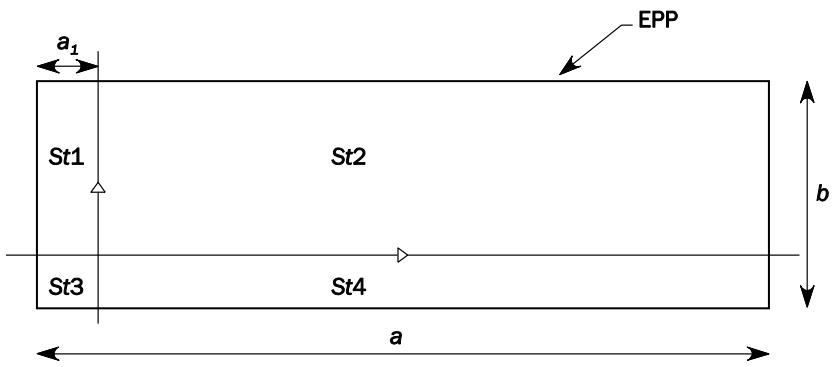

3.7.1.3 Load Calculation Point

1 For the yield strength assessment, the local pressure and hull girder stress used for the calculation of the local scantlings are to be taken at the Load Calculation Point (*LCP*) having coordinates *x*, *y* and *z* as specified in **Table 3.7.1-2** unless otherwise specified.

Table 3.7.1-2 *LCP* Coordinates for Yield Strength Assessment

LCP coordinates	General(1)		Horizontal plating		Vertical transverse structure and transverse stool plating	
	Longitudinal framing (*See* **Fig. 3.7.1-3**)	Transverse framing (*See* **Fig. 3.7.1-4**)	Longitudinal framing	Transverse framing	Horizontal framing (*See* **Fig. 3.7.1-5**)	Vertical framing (*See* **Fig. 3.7.1-6**)
x coordinate	Mid-length of the *EPP*		Mid-length of the *EPP*		Corresponding to *y* and *z* coordinates	
y coordinate	Corresponding to *x* and *z* coordinates		Outboard *y* value of the *EPP*		Outboard *y* value of the *EPP*, taken at *z* level(2)	
z coordinate	Lower edge of the *EPP*	The greater of lower edge of the *EPP* or lower edge of the strake	Corresponding to *x* and *y* coordinates		Lower edge of the *EPP*	The greater of lower edge of the *EPP* or lower edge of the strake

(1) All structures other than horizontal plating or vertical transverse structures

(2) For transom plates, the *y* coordinate of the load calculation point is to be taken corresponding to the *y* value at the side shell at the *z* level of the load calculation point for the external dynamic pressure calculation.

Fig. 3.7.1-3 Load Calculation Point (*LCP*) for Longitudinal Framing

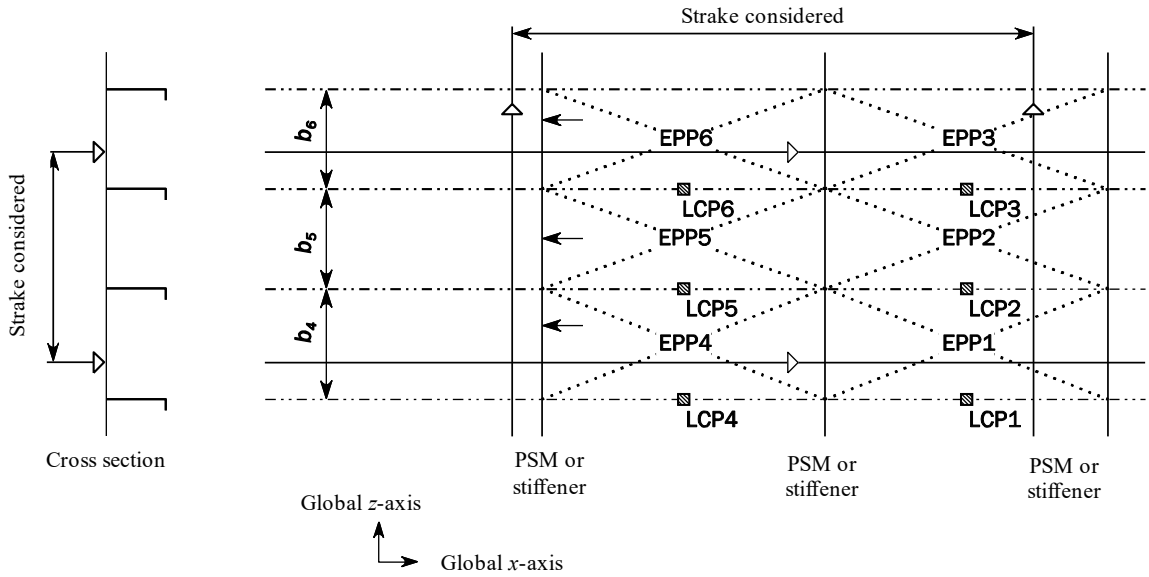

Fig. 3.7.1-4 Load Calculation Point (*LCP*) for Transverse Framing

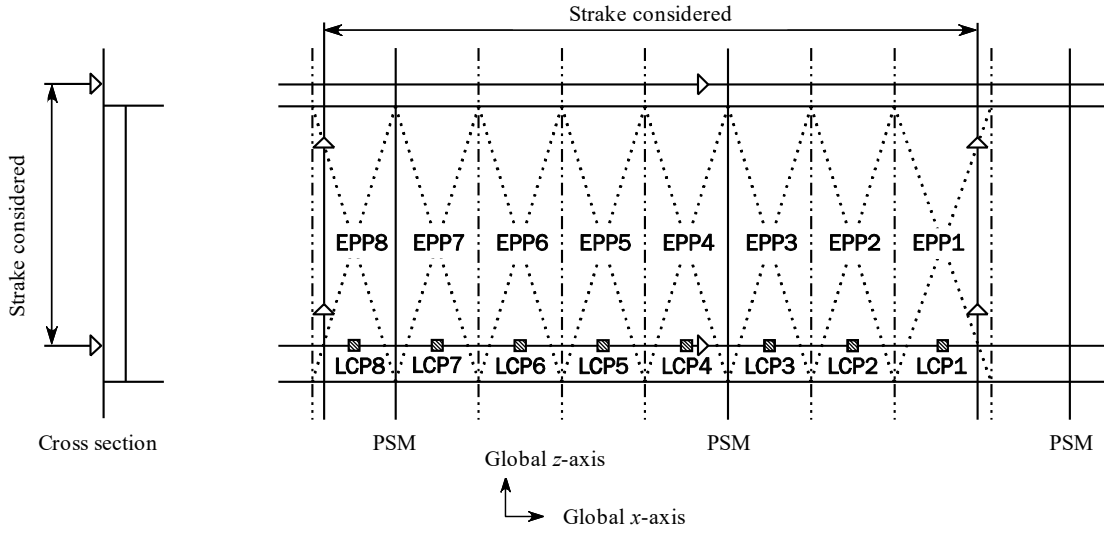

Fig. 3.7.1-5 Load Calculation Point for Horizontal Framing on Transverse Vertical Structure

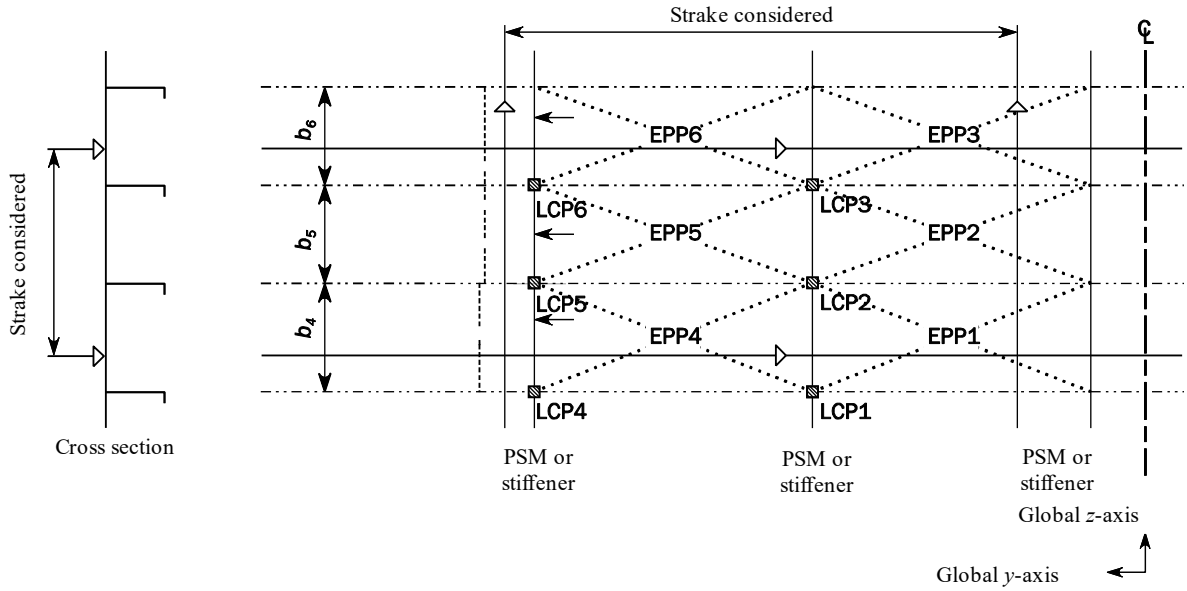

Fig. 3.7.1-6 Load Calculation Point for Vertical Framing on Vertical Transverse Structure

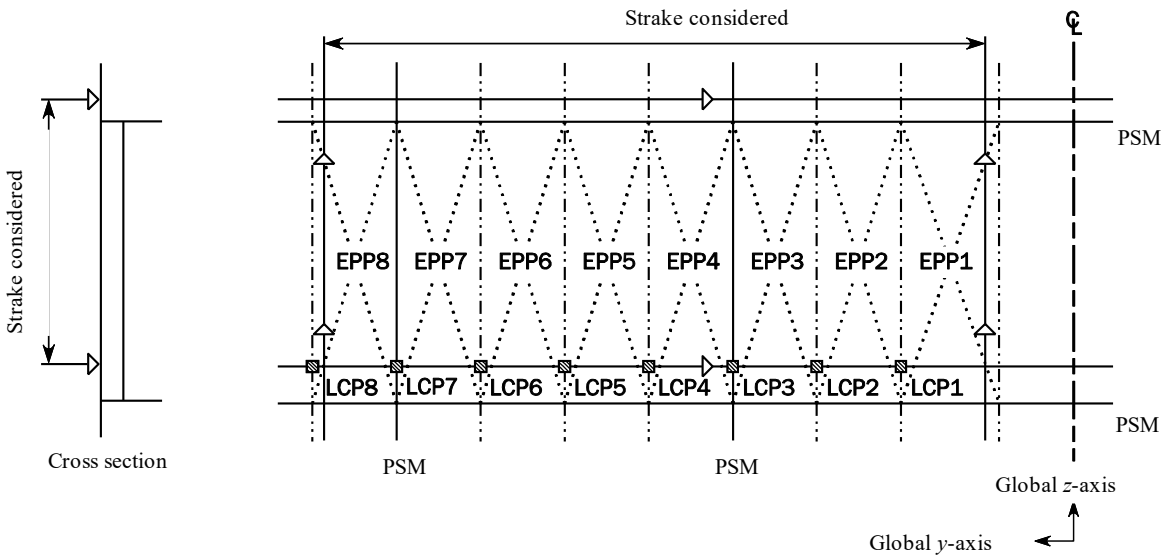

2 For the buckling strength assessment of the *EPP* according to **5.3**, the *LCPs* for the pressure and hull girder stresses are to be as specified in **Table 3.7.1-3** unless otherwise specified. For buckling strength assessment by finite element analysis, **8.6.2** is applicable.

Table 3.7.1-3 *LCP* Coordinates for Plate Buckling

LCP coordinate	*LCP* for pressure	*LCP* for hull girder stress (*See* **Fig. 3.7.1-7**)		
		Bending stress(1)		Shear stress
		Other than horizontal plating	Horizontal plating	
x coordinate	Same coordinates as *LCP* for yielding (*See* **Table 3.7.1-2**)	Mid-length of the *EPP*		
y coordinate		Corresponding to *x* and *z* coordinates	Outboard and inboard ends of the *EPP* (Points *A*1 and *A*2)	Mid-point of the *EPP* (Point *B*)
z coordinate		Both upper and lower ends of the *EPP* (Points *A*1 and *A*2)	Corresponding to *x* and *y* coordinates	
(1) The bending stress for curved plate panels is the mean value of the stresses calculated at Points A1 and A2.				

Fig. 3.7.1-7 *LCP* for Plate Buckling – Hull Girder Stress

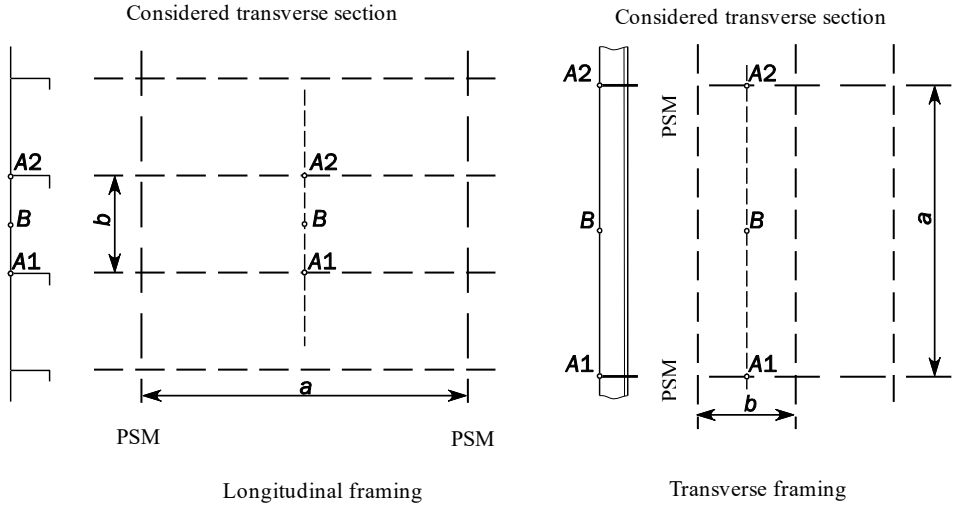

3.7.2 Stiffeners

3.7.2.1 Reference Point

The requirements of the section modulus for the stiffeners relate to the reference point giving the minimum section modulus. This reference point is generally located as shown in **Fig. 3.7.2-1** for typical profiles.

3.7.2.2 Load Calculation Point

1 The load calculation point *LCP* for the pressure is located at the following **(1)** and **(2)** unless otherwise specified. For stiffeners located on transom plates, the *y* coordinate of the load calculation point is to be taken corresponding to the *y* value at the side shell at the *z* level of the load calculation point for the external dynamic pressure calculation.

(1) Middle of the full length ℓ of the considered stiffener

(2) The intersection point between the stiffener and its attached plate

2 The load calculation point *LCP* for the hull girder bending stresses is located at the following **(1)** and **(2)**:

(1) For yielding strength assessment according to **Chapter 6**:

(a) At the middle of the full length ℓ of the considered stiffener

(b) At the reference point given in **Fig. 3.7.2-1**

(2) For prescriptive buckling strength assessment according to **5.3**:

(a) At the middle of the full length ℓ of the considered stiffener

(b) At the intersection point between the stiffener and its attached plate

Fig. 3.7.2-1 Reference Point for Calculation of Section Modulus and Hull Girder Stress for Local Scantling Assessment

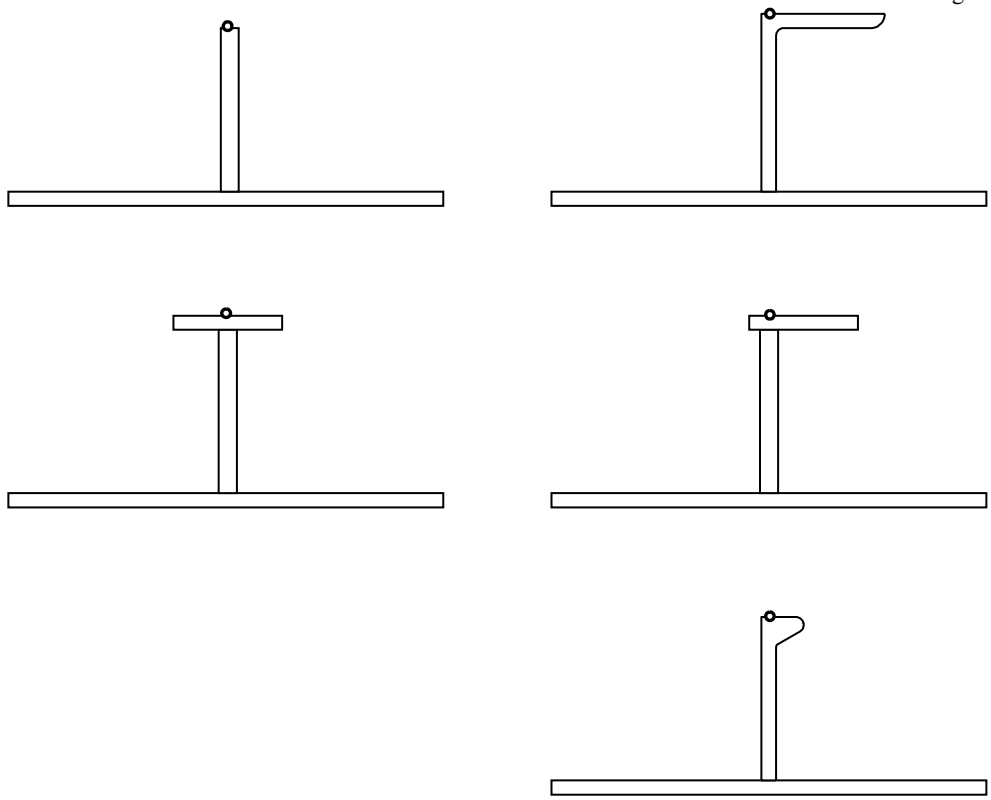

3 Stiffeners other than horizontal stiffener

The lateral pressure P is to be calculated as the maximum between the value obtained at middle of the full length, ℓ and the value obtained from the following formula:

$$P = \frac{P_U + P_L}{2}$$

P_U, P_L: Lateral pressure at the upper and lower ends of the vertical stiffener span ℓ, respectively

3.7.3 Primary Supporting Members

3.7.3.1 Load Calculation Point

1 The load calculation point for the pressure is located at the following **(1)** and **(2)** unless otherwise specified:

(1) The intersection between the primary supporting member web and the attached plating at the ends of the full length ℓ of the primary supporting member under consideration.

(2) The intersection between the primary supporting member web and the attached plating at the zero pressure point where the pressure is 0 within the full length ℓ of the primary supporting member.

2 The load calculation point for the hull girder bending stresses according to 7.2 is located at the intersection between the primary supporting member web and the face plate at the middle of the full length ℓ.

3.8 Loading Manual and Loading Instruments

3.8.1 General

3.8.1.1 General

1 In order to enable the ship's master to arrange for the loading of cargo and ballasting to avoid the occurrence of unacceptable stress in the ship's structure, ships are to be provided with a loading manual approved by the Society.

2 For ships with a length L_f of not less than 100 m, which fall under one of the following conditions, a loading instrument approved by the Society is to be provided on board the ship:

(1) Ships subject to **Part 2-1**, **Part 2-2**, **Part 2-3**, **Part 2-4**, **Part 2-7**, **Part N** or **Part S**

(2) Ships with decks containing large openings that need special considerations on the composite stress of vertical and horizontal bending and torsional moments

(3) Ships on which the cargo and ballast are loaded in uneven distribution

(4) Other ships the Society considers to be required to be equipped with a loading instrument

3 A ship may in actual operation be loaded differently from the loading conditions specified in the loading manual, provided that limitations for longitudinal and other strength requirements as defined in the loading manual and loading instrument on-board and applicable stability requirements are not exceeded.

3.8.2 Loading Manual

3.8.2.1 General

1 A loading manual describes the loading conditions on which the design of the ship has been based. This document is to provide the operator with information necessary to carry out such operations as cargo loading/unloading and ballasting/unballasting.

2 The loading manual is to be prepared in a language understood by the intended users, including the master of the ship. If this language is not English, a translation into English is to be included.

3 The loading manual is to describe the following (*See* also **Annex 3.8 "Items to be Included in Loading Manual"**):

(1) The standard loading conditions on which the design of the ship has been based for seagoing and harbour/sheltered water, including permissible limits of still water bending moment and shear force

(2) The results of the calculations of still water vertical bending moment and shear force in each loading condition

(3) The allowable local loading for structures, such as hatch covers, decks or double bottom, as deemed necessary by the Society

(4) The relevant operational limitations

4 "Standard loading conditions" in **-3(1)** above refers to the loading conditions specified in **Annex 3.8** for each ship type.

5 For ships undergoing classification survey, longitudinal strength calculations in still water are to be performed in various operating conditions at the time of completion of the ship, and the necessary data and results of these calculations are to be included in the loading manual.

6 For ships equipped with a loading instrument, the loading manual is to state that the loading instrument and its operation manual are provided on board the ship.

3.8.2.2 Condition of Approval

1 The approved loading manual is to be based on the final data of the ship.

2 In applying **-1** above, modifications resulting in changes to the main data of the ship require the loading manual to be updated and re-approved, and subsequently the loading computer system to be updated and re-approved. However, an updated loading manual need not be resubmitted provided that the resulting draughts, still water bending moments, and vertical shear forces do not differ from the originally approved data by more than 2 %.

3.8.2.3 Additional Requirements for Bulk Carriers, Etc.

1 For ships with a length L_f of not less than 150 m, which are bulk carriers specified in **1.3.1(13), Part B** or in **An1.2.1(1), Annex 1.1 "Additional Requirement for Bulk Carriers in Chapter XII of the SOLAS CONVENTION", Chapter 1, Part 2-2**, the additional requirements for the loading manual and loading instruments specified in **3.2, Part 2-3** are to be applied.

2 Notwithstanding **-1** above, for bulk carriers specified in **An1.2.1(1), Annex 1.1, Chapter 1, Part 2-2**, which do not fall under the bulk carriers specified in **1.3.1(19), Part B** or self-unloading ships specified in **1.3.1(19), Part B**, the additional requirements for the loading manual and loading instruments specified in **3.2, Part 2-2** are to be applied.

3 For ships with a length L_f of less than 150 m, which fall under **An1.2.1(1), Annex 1.1, Chapter 1, Part 2-2**, a loading manual complying with the requirements in **3.2, Part 2-2** is to be provided on board the ship.

3.8.3 Loading Instrument

3.8.3.1 General

1 A loading computer system is a system, which is either analogue or digital, by means of which it can be easily and quickly ascertained that, at specified read-out points for the ship, relevant operational limitations, such as the still water vertical bending moments and shear forces, where applicable, in any load or ballast condition do not exceed the specified permissible values. An approved loading instrument cannot replace an approved loading manual.

2 The loading instrument is to be capable of performing its intended functions in the installed environment. A loading instrument

complying with **Part 7 of the Guidance for the Approval and Type Approval of Materials and Equipment for Marine Use** is recommended.

3 An operation manual for the loading instrument is to be provided on board the ship. The operation manual and the instrument input and output are to be prepared in a language understood by the intended users, including the master of the ship. If this language is not English, a translation into English is to be included.

3.8.3.2 Functions

1 The loading instrument is to meet the following requirements **(1)** to **(7)** regarding its input and output:

(1) The loading conditions of cargo holds, all tanks forming part of the ship's hull and independent cargo tanks are, in principle, to be inputted individually.

(2) Input data are to be verified.

(3) At least the following items are to be outputted:

(a) Displacement

(b) Draughts and trim

(c) Still water vertical shear force (for ships with longitudinal bulkheads, the respective shear forces acting on the longitudinal bulkhead and the shell plating considering local loads)

(d) Still water vertical bending moment

(4) Still water vertical bending moments and shear forces are to be outputted at the forward end transverse bulkheads of the machinery space or cargo pump room, collision bulkhead and the transverse bulkheads located between them.

(5) Still water vertical bending moments are to be capable of being outputted with the maximum values of hogging and sagging moments.

(6) Calculated values for the standard loading conditions are to be readily verified.

(7) The calculated values of still water vertical bending moment and shear force for each loading condition are to be readily compared with the permissible values of the still water vertical bending moment and shear force stated in the loading manual of the ship.

2 Data verifying the computing accuracy of the loading instrument under not less than four loading conditions selected from the loading manual are to be submitted to the Society. The values obtained from the calculation method used to determine the still water vertical bending moment and shear force specified in **4.3.2.2** are to be compared with the values calculated by the instrument, and it is to be confirmed that the respective errors are within ± 3 %.

3 With respect to **-2** above, where the absolute values of still water vertical bending moment and shear force are equal to or less than 50 % of their respective permissible values, the absolute values in question need not be compared with each other, but it is to be ascertained that the difference in the ratio of the values in question and their permissible values is within 1.5 %.

4 Any change made to input/output, computing procedures, etc., is to be reported to the Society. Where deemed necessary by the Society, the tests and inspections specified in item 17(1), **Table B2.7, Part B** are to be carried out according to **-2** above on the loading instrument in the installed environment with the attendance of the inspector from the Society.

Annex 3.2 GUIDANCE FOR THE USE OF FIBRE-REINFORCED PLASTIC (*FRP*)

An1 General

An1.1 Overview

An1.1.1 Application

This Annex provides standards for choosing the appropriate fibre-reinforced plastic (hereinafter, referred to as "*FRP*") products, in cases where their use has been approved by the Society, for each ship design in accordance with their purpose of use and location of use on a case-by-case basis.

An1.1.2 Documents to Be Submitted

The following plans and documents **(1)** to **(4)** are to be submitted to the Society:

(1) Plans that indicate the location of use, service conditions and arrangement, etc.

(2) Documents describing any special electrical characteristics and service conditions of the *FRP* products to be used.

(3) Plans and documents regarding the application procedures and joining procedures for the *FRP* products to be used.

(4) Other drawings and data considered necessary by the Society.

An2 Requirements for *FRP* Products

An2.1 General Requirements for *FRP* Products

An2.1.1 General Requirements

1 All *FRP* products are to be approved by the Society in accordance with **Chapter 9, Part 2 of the Guidance for the Approval and Type Approval of Materials and Equipment for Marine Use** and are to be adequate for the service conditions.

2 All *FRP* products are to be resistant to any substances they are expected to be exposed to during service.

An2.1.2 Strength of Connections

1 The connections of *FRP* products are to be of sufficient strength.

2 All tightening of joints is to be performed in accordance with the manufacturer's instructions.

3 All bonding procedure specifications are to be submitted to the Society.

An2.2 Requirements for *FRP* Products Depending on Service and/or Locations

An2.2.1 Requirements Depending on Service and/or Locations

1 The requirements for fire integrity, fire retardance, flame spread and surface flammability as well as smoke generation for *FRP* products are, in principle, to be in accordance with those given in **Table An1**. If an *FRP* product falls under multiple classifications of service in **Table An1**, it is to satisfy the most stringent requirements.

2 Subdivisions other than those specified in **Table An1** are to be as deemed appropriate by the Society.

3 Where the fire integrity test and the flame spread test have been approved as the approval tests specified in **Chapter 9, Part 2 of the Guidance for the Approval and Type Approval of Materials and Equipment for Marine Use** in accordance with *ASTM F* 3059-14, notwithstanding **Table An1**, applicable requirements for *FRP* products can be in accordance with ***ASTM F* 3059-14**.

4 Notwithstanding the requirements in **-1** and **-3** above, *FRP* products used for safe access to bows specified in **14.13.2** are to be tested and approved by the Society in accordance with the fire integrity test specified in **9.4.2-1(4), Chapter 9, Part 2 of the Guidance for the Approval and Type Approval of Materials and Equipment for Marine Use**, the surface flammability test specified in **9.4.2-3(2)**, the smoke generation test specified in **9.4.2-4(2)**, and the toxicity test specified in **9.4.2-5(1)**.

5 In case of use in inspection equipment specified in **14.16**, *FRP* products are to be used for ladders, handrails, steps and small platforms because they are not considered to be part of the hull construction.

6 In cases where *FRP* products are installed in the hazardous areas specified in **4.3** and **4.7, Part H**, the risk of electrical charge of the *FRP* is to be taken into account. In cases where *FRP* products are installed in cargo tanks, fuel oil tanks, or the areas deemed necessary by the Society, such *FRP* products are to have no electrostatic properties. Generally, in cases where comb-like gratings of personnel walkways are installed in areas except for those mentioned above, *FRP* products that have electrostatic properties may be

used. Here, "no electrostatic properties" means that the earth resistance of these products at any point is not greater than 1 *MΩ*.

Table An1 Applicable Requirements for *FRP* Products

Location	Service	Fire Integrity	Fire Retardance	Flame Spread and Surface Flammability	Smoke Generation	Toxicity
Cargo Pump Rooms	All personnel walkways, catwalks, ladders, platforms, or access areas	L_1	○	○	–	–
Cargo Holds	Walkways or areas that may be used for escape, or access for firefighting, emergency operation, or rescue	V_1	○	–	–	–
	Walkways, catwalks, ladders, platforms, or access areas other than those described above	–	○	–	–	–
Cargo Tanks	All personnel walkways, catwalks, ladders, platforms, or access areas	*See* **Note (3)**	○	–	–	–
Fuel Oil Tanks	All personnel walkways, catwalks, ladders, platforms, or access areas	*See* **Note (3)**	○	–	–	–
Ballast Water Tanks	All personnel walkways, catwalks, ladders, platforms, or access areas	*See* **Note (4)**	○	–	–	–
Cofferdams, void spaces, double bottoms, pipe tunnels, etc.	All personnel walkways, catwalks, ladders, platforms, or access areas	*See* **Note (4)**	○	–	–	–
Accommodation, service spaces and control rooms	All personnel walkways, catwalks, ladders, platforms, or access areas	L_1	○	○	○	–
Lifeboat embarkation or safe refuge stations in open deck areas	All personnel walkways, catwalks, ladders, platforms, or access areas	L_2	○	–	–	–
Open decks or semi-enclosed areas	Walkways or areas which may be used for escape or access for firefighting, emergency operation, or rescue(6)	L_3(5)	○	–	–	–
	Walkways, catwalks, ladders, platforms, or access areas other than those described above	–	○	–	–	–

(Notes)

(1) Symbols

○: The fire retardance test, flame spread and surface flammability test, smoke generation test and toxicity test specified in **9.4.2, Chapter 9, Part 2 of the Guidance for the Approval and Type Approval of Materials and Equipment for Marine Use** are to be satisfied.

–: Not applicable

(2) Abbreviations

L_1: L_1 is the abbreviation for Fire Integrity Level 1. *FRP* products complying with Fire Integrity Level 1 are those specified in **9.1.2(4), Chapter 9, Part 2 of the Guidance for the Approval and Type Approval of Materials and Equipment for Marine Use**.

L_2: L_2 is the abbreviation for Fire Integrity Level 2. *FRP* products complying with Fire Integrity Level 2 are those specified in **9.1.2(3), Chapter 9, Part 2 of the Guidance for the Approval and Type Approval of Materials and Equipment for Marine Use**.

L_3: L_3 is the abbreviation for Fire Integrity Level 3. *FRP* products complying with Fire Integrity Level 3 are those specified in **9.1.2(2),**

Chapter 9, Part 2 of the Guidance for the Approval and Type Approval of Materials and Equipment for Marine Use".

(3) Fire integrity is not required in principle. However, if these spaces are normally entered and exited when underway, *FRP* of L_1 is to be applied.

(4) Fire integrity is not required in principle. However, if these spaces are normally entered and exited when underway, *FRP* of L_3 is to be applied.

(5) Vessels fitted with fixed foam fire-extinguishing systems and fixed dry chemical powder type extinguishing systems on deck require *FRP* of L_1 integrity for foam system operational areas and access routes.

(6) Excluding the safe access to the bow specified in **14.13.2**.

Annex 3.8 ITEMS TO BE INCLUDED IN LOADING MANUAL

An1 General

An1.1 General

An1.1.1 Composition of the Loading Manual

1 The loading manual is to be composed of the following three parts:

(1) Introduction

This part is to contain explanatory notes that provide general guidance for loading to help understand the ship's general features and comprehensively grasp the relationship between loading and hull strength.

(2) Standard loading conditions

This part is to give descriptions of the ship's standard loading conditions presented in **An1.3**.

(3) Methods of calculation of longitudinal strength for loading conditions different from the standard loading conditions

2 The loading manual is to describe the following for ships subject to **Part 2-1**:

(1) Methods of calculation of the torsional moment (still water torsional moment) of hulls due to uneven cargo stowage

Methods of calculation to verify that the torsional moment generated in the hull due to uneven cargo stowage under the loaded condition is within the allowable range.

(2) Allowable value for still water torsional moment

3 For ships with a freeboard length L_f of less than 100 m, **-1(3)** above may be omitted. For reference, see **Appendix C2**.

An1.2 Items to be Included in the Introduction

An1.2.1 Principal Dimensions

The introduction of the loading manual is to contain general explanatory notes on the construction, arrangement, characteristics and compartments of the ship, including the principal dimensions.

An1.2.2 Precautions for Loading

1 The following precautions regarding loading are to be described in the loading manual:

(1) For the standard loading conditions, the results of the general hull strength analysis, including the primary supporting structure strength and local strength and the operational precautions based on the analysis results.

(2) For loading conditions different from the standard loading conditions, precautions regarding the prevention of excessive stress on the hull

(3) Precautions regarding weight shifting involving the transfer of ballast water and cargo under the standard loading conditions or any other loading conditions

(4) Precautions related to the filling level of ballast tanks as specified in **An1.1.2-2, Annex 4.3 "Guideline for the Assessment of Longitudinal Strength Relating to Ballasting/Deballasting"**.

2 Although the specific content may differ depending on the ship, a loading manual is generally to be prepared while carefully noting the following points:

(1) The minimum bow draught required for the structural strength of the strengthened bottom forward

(2) Limitation to the apparent specific gravities of cargoes in cargo holds and the loading heights therein

(3) Acceptability of alternate loading and two-port loading, etc.

(4) Limitation to liquid levels in tanks

(5) Limitation to loading with respect to local strength and primary supporting structure strength (e.g. limitations on the maximum design cargo weight on deck or hatch covers)

(6) Limitation to loading with respect to longitudinal hull strength

(7) Precautions for ballasting/deballasting, dry-docking and the like

An1.2.3 Allowable Values for Still Water Vertical Bending Moment and Still Water Vertical Shear Force

1 Among the allowable values for still water vertical bending moment to be included in the loading manual, those for ships on

voyage are to be M_{SV_max} and M_{SV_min}, as specified in 4.3.2. The allowable values for ships in harbour are to be M_{PT_max} and M_{PT_min}, as specified in 4.3.3.

2 Among the allowable values for still water vertical shear force to be included in the loading manual, those for ships on voyages are to be Q_{SV_max} and Q_{SV_min}, as specified in 4.3.2. The allowable values for ships in harbour are to be Q_{PT_max} and Q_{PT_min}, as specified in 4.3.3.

3 In applying **-1** and **-2** above, the values specified in 4.2.2, Part 2-1 and 4.2.3, Part 2-1, instead of those specified in 4.3.2 and 4.3.3, are to be used for ships subject to the requirements in Part 2-1.

4 In applying **-1** and **-2** above, individual allowable values are to be specified following the descriptive examples **1.2** and **1.3, Appendix C2**. In this case, the plus and minus directions to be specified for the bending moment and shear force.

5 The stress levels of longitudinal strength are to be specified following descriptive example **1.4, Appendix C2**.

An1.2.4 Allowable Values for Hull Torsional Moment (Still Water Torsional Moment) Due to Uneven Cargo Loading

For ships subject to the specifications in 5.5, Part 2-1, the allowable values for still water torsional moment are to be specified.

An1.3 Standard Loading Conditions

An1.3.1 Standard Loading Conditions

1 The loading manual is to contain the following loading conditions upon which the approval of the scantlings of hull structural members is based:

(1) Container carriers, general cargo ships, roll-on/roll-off ships, refrigerated cargo ships, bulk carriers, ore carriers, car carriers, wood chip carriers, etc.
  (a) Light load condition
  (b) Ballast conditions (at arrival and departure)
  (c) Homogeneous loading conditions of cargo (at arrival and departure)
  (d) All non-homogeneous loading conditions as given in this specifications (at arrival and departure)
  (e) Specially approved loading conditions for short voyages or in smooth water, where necessary
  (f) Temporary severe loading conditions during cargo loading or unloading, where necessary
  (g) Conditions for entering dry dock while afloat

(2) Tankers
  (a) Light load condition
  (b) Ballast conditions (at arrival and departure)
  (c) Homogeneous loading conditions of cargo (at arrival and departure)
  (d) All non-homogeneous loading conditions as given in this specifications (at arrival and departure)
  (e) Conditions that largely differ from the standard ballast condition due to tank cleaning or other work while the ship is at sea
  (f) Temporary severe loading conditions during cargo loading or unloading, where necessary
  (g) Conditions for entering dry dock while afloat

(3) Ships carrying dangerous chemicals in bulk
  (a) Light load condition
  (b) Ballast conditions (at arrival and departure)
  (c) Homogeneous loading conditions of cargo (at arrival and departure)
  (d) All non-homogeneous loading conditions as given in this specifications (at arrival and departure)
  (e) Conditions that largely differ from the standard ballast condition due to tank cleaning or other work while the ship is at sea
  (f) Temporary severe loading conditions during cargo loading or unloading, where necessary
  (g) Conditions for entering dry dock while afloat
  (h) Loading conditions specified in the operation manual
  (i) Loading conditions for cargo items included in the approved list of cargoes, which are of a high density or require heating or isolated stowage.

(4) Ships carrying liquefied gases in bulk
  (a) Light load condition
  (b) Ballast conditions (at arrival and departure)
  (c) Homogeneous loading conditions of cargo (at arrival and departure)

(d) Loading conditions involving empty or partially loaded tanks

(e) Loading conditions where two or more kinds of cargoes with largely different specific gravity are loaded in different tanks

(f) Conditions in smooth water where increased vapour pressure is approved

(g) Temporary severe loading conditions during cargo loading or unloading, where necessary

(h) Conditions for entering dry dock while afloat

(5) Combination carriers

(a) The same conditions as specified in **(1)** and **(2)** above

2 In addition to those in **-1** above, the following loading conditions are to be included in the standard loading conditions:

(1) For ships with design loading conditions that assume any ballasting and/or deballasting during voyages, the conditions of individual ballast tanks immediately before and after ballasting/deballasting are to be included as intermediate conditions between the arrival and departure conditions. For the setting of such intermediate conditions and the matters to be covered in the loading manual, refer to **Annex 4.3 "Guideline for the Assessment of Longitudinal Strength Relating to Ballasting/Deballasting"**.

(2) Any intermediate stage during a voyage, which is considered severe in terms of hull strength due to changes in the weight and disposition of consumables.

(3) Other loading conditions deemed necessary by the Society.

3 Restrictions imposed for operation of the ship in the standard loading conditions, if any, are to be specified.

An1.3.2 Relationship with Hull Girder Loads

1 The following results of calculations of longitudinal strength for individual loading conditions are to be included in the loading manual. However, if included in the Ballast Water Management Plan, the calculation results in **(3)** need not to be included in the loading manual.

(1) Still water vertical bending moment and still water vertical shear force and allowable values therefor

(2) Stress levels related to longitudinal strength

(3) Results of calculations of vertical bending moment and vertical shear force in temporary partial loading conditions during ballast water exchange using the sequential method

(4) Still water vertical bending moment and still water vertical shear force in flooded cargo holds, and the allowable values therefor, where loads in flooded conditions are design considerations

(5) For ships subject to **Part 2-1**, still water torsional moment and allowable values therefor

2 To help readily grasp the relationship between loading conditions and hull strength under the standard loading conditions and to facilitate the planning of the loading operation, the results of calculations of the still water bending vertical moment (M_{SV}) and still water vertical shear force (Q_{SV}) in each condition are to be projected into graphical illustrations, together with the respective allowable values. In this case, the plus and minus directions are also to be specified for M_{SV} and Q_{SV}.

3 The results of calculations of M_{SV} and Q_{SV} for each loading condition are to be concisely shown on a single page or a double-page spread as far as practicable, together with the arrangement plan of the compartments (tanks and cargo holds), the cargo stowage table and the results of trim and stability calculations.

4 Descriptive examples of **-2** and **-3** above are shown in **1.5, Appendix C2**.

An1.3.3 Strength-related Restrictions

1 Where any restrictions, such as those shown by examples **(1)** to **(3)** below, are imposed for operation of the ship, the following matters are to be included in the loading manual:

(1) Restrictions due to the deck load P_{dks} (kN/m^2), as specified in **4.4.2.7**

(2) Operational and cargo loading restrictions set at the design phase

(3) Maximum permissible cargo mass calculated for cargo holds in accordance with the specifications in **Chapter 3, Part 2-2, Chapter 3, Part 2-3** or **Chapter 3, Part 2-4**. Maximum and minimum permissible cargo masses corresponding to the draught, where the permissible cargo mass varies depending on the draught. Where the permissible cargo masses concerned are used, a note to the following effect is to be included: Where the ship engages in a service carrying cargoes such as steel coils or heavy cargoes that may have an adverse effect on the local strength of the double bottom and that are not described as cargo in the loading manual, special consideration is to be given to the longitudinal and double bottom strength.

2 Where the slamming impact pressure is to be reduced in accordance with the specifications in **4.8.2.2** in the examination of the

strength of the constituent members for compartments intended to be filled continually with seawater when in a ballast condition, it is to be stated in the loading manual that the relevant ballast tanks are to be filled in heavy weather conditions.

3 For ships whose longitudinal strength was assessed on the condition that the times when ballasting/deballasting operations may be conducted are specified or limited, the time parameters for their ballasting/deballasting and appropriate instructions regarding their ballasting/deballasting based on these time parameters are to be specified in the loading manual.

4 For ships without restrictions on ballasting/deballasting in conditions different from those assumed for the longitudinal strength assessment (e.g. conditions of consumables), it is to be stated in the loading manual that the longitudinal strength of the ship is to be assessed while carefully noting the filling level of the ballast tanks.

5 For ships other than liquefied gas carriers intended to be loaded with cold liquid cargoes, the design minimum temperature is to be specified in the loading manual.

Chapter 4 LOADS

Symbols

For symbols not specified in this Chapter, refer to **1.4**.

x, y, z: X, Y and Z coordinates (m) of a point on which a load acts or for which acceleration is calculated in the coordinate system specified in **1.4.3.6**.

4.1 General

4.1.1 Overview

4.1.1.1 Composition and Overview of this Chapter

The sections of this Chapter specify the requirements shown in **Table 4.1.1-1** as formulae for determining the structural scantlings and loads used in the respective strength assessments specified in the corresponding chapters of **Part C**.

Table 4.1.1-1 Overview of Chapter 4

Section	Title	Overview
4.1	General	Requirements related to general principles in **Chapter 4**
4.2	Ship Motions and Accelerations	Requirements related to ship motions and accelerations
4.3	Loads to be Considered in Longitudinal Strength	Requirements for hull girder loads to be considered in the requirements of longitudinal strength specified in **Chapter 5**
4.4	Loads to be Considered in Local Strength	Requirements for loads to be considered in the requirements of local strength specified in **Chapter 6**
4.5	Loads to be Considered in Strength of Primary Supporting Structures	Requirements for loads to be considered in the requirements of strength of primary supporting structures specified in **Chapter 7**
4.6	Loads to be Considered in Strength Assessment by Cargo Hold Analysis	Requirements for loads to be considered in the requirements for strength assessment by cargo hold analysis specified in **Chapter 8**
4.7	Loads to be Considered in Fatigue	Requirements for loads to be considered in the requirements of fatigue strength assessment specified in **Chapter 9**
4.8	Loads to be Considered in Additional Structural Requirements	Requirements for loads to be considered in additional structural requirements specified in **Chapter 10**
4.9	Loads to be Considered in Structures Outside Cargo Region	Requirements for loads to be considered in the requirements of structures outside cargo region specified in **Chapter 11**
4.10	Loads to be Considered in Equipment	Requirements for loads to be considered in the requirements of strength of hatch covers, etc., among the requirements of equipment specified in **Chapter 14**
Annex 4.3	Guideline for the Assessment of Longitudinal Strength Relating to Ballasting/Deballasting	Guideline for loading conditions to be considered in ships intended to be operated with partially filled ballast tanks during voyage, and in ships where any ballasting and/or deballasting of ballast tanks is inteded during voyage

4.1.2 Design Load Scenarios and Loads to be Considered

4.1.2.1

1 The following loads are, in principle, to be considered corresponding to the design load scenarios specified in **1.3.2.8**.

(1) Maximum load condition: Hull girder loads such as vertical still water and wave bending moments acting on the hull during voyage as well as lateral loads due to seawater, cargoes, etc.

(2) Harbour condition: Hull girder loads such as vertical bending moment acting on the hull in harbour and sheltered areas, and lateral loads due to seawater, cargoes, etc.

(3) Testing condition: Lateral loads acting on the hull during hydrostatic testing

(4) Flooded condition: Lateral loads and hull girder loads due to flooding which may occur in an accident such as collision or grounding

(5) Cyclic load condition: Loads representing the load conditions to be considered when assessing fatigue strength, and hull girder loads such as vertical still water and vertical wave bending moments acting on the hull and lateral loads due to seawater, cargoes, etc.

2 Consideration of additional design load scenarios and loads not specified in this Chapter may be required where deemed necessary by the Society.

4.1.3 Definitions

4.1.3.1 Coordinate System

The definition of the coordinate system is as specified in **1.4.3.6**.

4.1.3.2 Ship Motions and Accelerations

The definitions of ship motions and accelerations are given in **Table 4.1.3-1** and **Fig. 4.1.3-1.**

Table 4.1.3-1 Sign Convention for Ship Motions and Accelerations

	Definition of positive and negative
Surge	Positive surge and surge acceleration are translation in the *X*-axis (positive forward).
Sway	Positive sway and sway acceleration are translation in the *Y*-axis (positive portside).
Heave	Positive heave and heave acceleration are translation in the *Z*-axis direction (positive upwards).
Roll	Positive roll and roll acceleration are positive rotation about a longitudinal axis through the centre of gravity (starboard downward and port up).
Pitch	Positive pitch and pitch acceleration are rotation about a transverse axis through the centre of gravity (bow downward and stern up).
Yaw	Positive yaw and yaw acceleration are rotation about a vertical axis through the centre of gravity (bow in port side and stern in starboard side).

Fig. 4.1.3-1 Definitions of Positive Ship Motions and Accelerations

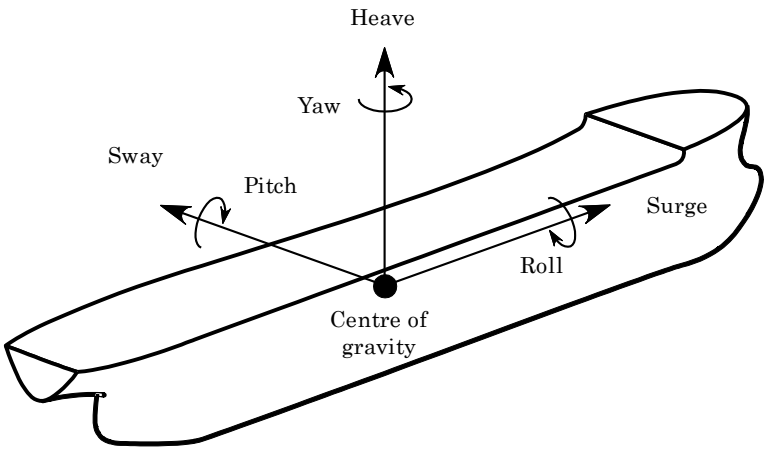

4.1.3.3 Hull Girder Loads

The sign conventions for vertical shear force, vertical bending moment, horizontal bending moment and torsional moment at any transverse section of the hull are given in **Table 4.1.3-2** and **Fig. 4.1.3-2.**

Table 4.1.3-2 Sign Conventions for Vertical Shear Force, Vertical Bending Moment, Horizontal Bending Moment and Torsional Moment

	Definitions of positive and negative
Vertical shear force (*kN*)	Positive in the case of upward resulting force acting forward of the transverse section of the hull under consideration, and downward resulting force acting aft of the transverse section of the hull under consideration.
Vertical bending moment (*kN-m*)	Positive (hogging) when inducing tensile stress in the strength deck and negative (sagging) when inducing tensile stress in the bottom.
Horizontal bending moment (*kN-m*)	Positive when inducing tensile stress in the starboard side and inducing tensile stress in the port side.
Torsional moment (*kN-m*)	Positive in the case of resulting moment acting aft of the transverse section of the hull following negative around the *X*-axis and resulting moment acting forward of the transverse section of the hull following positive around the *X*-axis

Fig. 4.1.3-2 Sign Conventions for Vertical Shear Force, Vertical Bending Moment, Horizontal Bending Moment and Torsional Moment

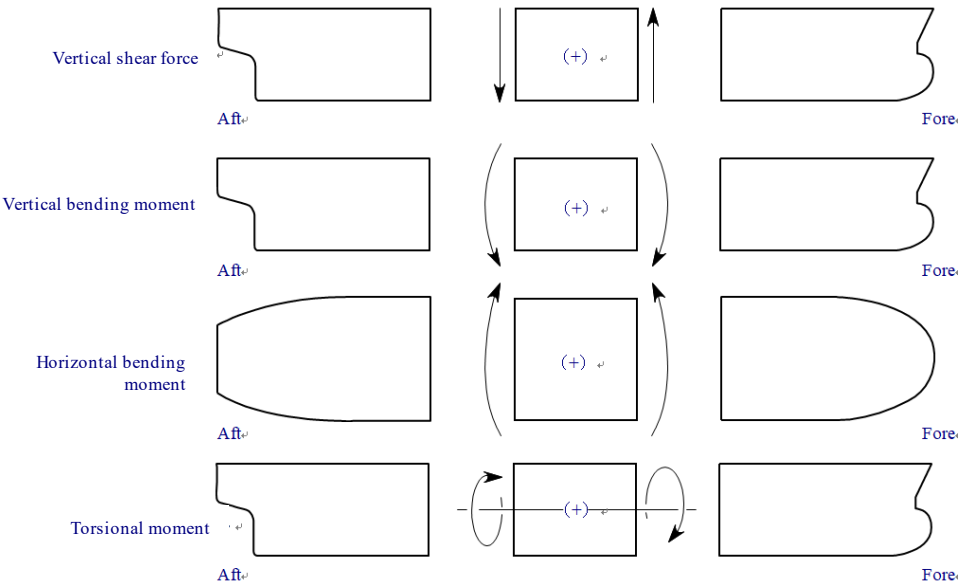

4.1.4 Restricted Navigation

4.1.4.1 General

Notwithstanding the requirements of this Chapter, for ships registered under the condition that the requirements of **1.2.2, Part A** are applicable and the navigation area is restricted, the wave loads may be given based on the sea state conditions in the restricted navigation area, in accordance with **Annex 1.1 "Special Requirements for Restricted Service"**.

4.1.5 Others

4.1.5.1 Trigonometric Function

The notation of the trigonometric function used in this Chapter is to be in accordance with the circular measure.

4.2 Ship Motions and Accelerations

4.2.1 General

4.2.1.1 General

1 The six degrees of freedom acceleration at the centre of gravity of the ship and the ship motion in this Chapter are to be as given in 4.2.2 and 4.2.3 unless otherwise specified.

2 The envelope accelerations at any position in this Chapter are to be as given in 4.2.4 unless otherwise specified.

4.2.2 Ship Motions

4.2.2.1 Roll Motion

Roll period T_θ (s) and roll angle θ (rad) are to be as given in Table 4.2.2-1.

Table 4.2.2-1 Roll Period T_θ and Roll Angle θ

Period (s)	Roll angle (rad)
$T_\theta = 2\pi\sqrt{\dfrac{L_C B T_{LC} C_{B_LC} K_{xx}{}^2 + A_\theta}{g L_C B T_{LC} C_{B_LC} \cdot GM}}$	$\theta = 3.72 C_{LF_\theta} C_{BK} C_{40} R_4 H_{S_\theta}$

Notes:

K_{xx}: Radius of gyration (m) around the X-axis to be taken as follows. However, the value calculated based on the weight distribution corresponding to the loading condition under consideration may be used.

For the full load condition of ships other than ore carriers, $0.35B$

For the full load condition of ore carriers, $0.25B$

For the ballast condition, $0.40B$

A_θ: As given by the formula:

$$A_\theta = L_C B^4 C_{W_LC}{}^{2.25}\left(-0.06\frac{z_G}{B} + 0.013 - \frac{0.006B}{z_G - 0.69B}\right)$$

z_G: Z coordinate (m) at the centre of gravity of the ship. The value[(1)] in the loading condition under consideration, which is described in the loading manual, is to be adopted.

GM: Metacentric height (m). The value[(1)(2)] in the loading condition under consideration, which is described in the loading manual, is to be adopted.

C_{LF_θ}: Coefficient to be taken as:

For the maximum load condition[(3)], $C_{LF_\theta} = C_{R_\theta} C_{NL_\theta}$

C_{R_θ}: Coefficient considering the effect of ship operation, to be taken as 0.85

C_{NL_θ}: Coefficient considering nonlinear effects, to be taken as 0.8

For the cyclic load condition[(4)], $C_{LF_\theta} = C_{F1_\theta} C_{F2_\theta}$

C_{F1_θ}: Coefficient considering speed effects, to be taken as 0.95

C_{F2_θ}: Conversion coefficient for the exceedance probability level to be considered in the fatigue strength assessment, to be taken as 0.23

C_{BK}: Coefficient considering the effect of bilge keel[(5)], to be taken as:

For $\ell_{BK}/L_C \geq 0.3$, $C_{BK} = 1.0$

For $\ell_{BK}/L_C < 0.3$, $C_{BK} = 1.2 - \dfrac{2}{3}\dfrac{\ell_{BK}}{L_C}$

ℓ_{BK}: Length of bilge keel (m), but for ships without a bilge keel, to be taken as 0.

C_{40} : Conversion factor for short-crested irregular waves, as given by the formula:

$C_{40} = C_{41} C_{42}$

C_{41}, C_{42} : As given by the following formulae:

$C_{41} = 0.12$

$$C_{42} = 1.43\left(\frac{1}{L_C B T_{LC} C_{B_LC}}\right)^{0.04}$$

R_4 : Coefficient representing the ship motion in regular waves, to be taken as:

$$R_4 = 1.41\left(\frac{1}{T_\theta{}^2 B}\right)^{0.3}$$

H_{S_θ} : Significant wave height (m) given by the following formula, but not to be less than 2.0.

$$H_{S_\theta} = -0.21T_{Z_\theta}{}^2 + 5.07T_{Z_\theta} - 15.7$$

T_{Z_θ} : Average zero up crossing wave period (s), as given by the following formula:

$$T_{Z_\theta} = 0.71T_\theta + 1.5$$

(1) The relevant requirements in **Part 2** may be applied where the value is not available.

(2) GM is not to be less than $0.002B^2$.

(3) To be used for the loads in the maximum load condition among the loads specified in **4.4**, **4.5** and **4.6**.

(4) To be used for the loads in the cyclic load condition specified in **4.7**.

(5) It is assumed that the bilge keel is attached to effective positions for roll damping.

4.2.2.2 Pitch Motion

Pitch period T_ϕ (s) and pitch angle ϕ (rad) are to be as given in **Table 4.2.2-2**.

Table 4.2.2-2 Pitch Period T_ϕ and Pitch Angle ϕ

Period (s)	Pitch angle (rad)
$T_\phi = \sqrt{\frac{2.6\pi L_C}{g}}$	$\phi = 3.72C_{LF_\phi}C_{50}R_5H_{S_\phi}$

Notes:

C_{LF_ϕ}: Coefficient to be taken as:

For the maximum load condition(1), $C_{LF_\phi} = C_{R_\phi}C_{NL_\phi}$

C_{R_ϕ}: Coefficient considering the effect of ship operation, to be taken as 0.85

C_{NL_ϕ}: Coefficient considering nonlinear effects, to be taken as 0.9

For the cyclic load condition(2), $C_{LF_\phi} = C_{F1_\phi}C_{F2_\phi}$

C_{F1_ϕ}: Coefficient considering speed effects, to be taken as 1.11

C_{F2_ϕ}: Conversion coefficient for the exceedance probability level to be considered in the fatigue strength assessment, to be taken as 0.22

C_{50}: Conversion factor for short-crested irregular waves, to be taken as:

$$C_{50} = C_{51}C_{52}$$

C_{51}, C_{52}: As given by the following formulae:

$$C_{51} = 0.12\left(L_C B C_{W_LC}\right)^{0.05}$$

$$C_{52} = 0.97$$

R_5: Coefficient representing the ship motion in regular waves, to be taken as:

$$R_5 = C_{53}\frac{3.5}{L_C C_{W_LC}}$$

C_{53} As given by the following formula:

$$C_{53} = 1.5\left(\frac{B}{L_C C_{B_LC}{}^2}\right)^{0.25}$$

H_{S_ϕ} : Significant wave height (m) given by the following formula, but not to be less than 2.0.

$$H_{S_\phi} = -0.21T_{Z_\phi}{}^2 + 5.07T_{Z_\phi} - 15.7$$

T_{Z_ϕ} : Average zero up crossing wave period (s), to be taken as:

$$T_{Z_\phi} = 2.6\left(\frac{1}{L_C B C_{W_LC}}\right)^{0.13} T_\phi$$

(1) To be used for the loads in the maximum load condition among the loads specified in **4.4**, **4.5** and **4.6**.

(2) To be used for the loads in the cyclic load condition specified in **4.7**.

4.2.3 Accelerations at the Centre of Gravity of Ships

4.2.3.1 Surge Acceleration

Surge acceleration a_1 (m/s^2) at the centre of gravity of the ship is to be as given in **Table 4.2.3-1.**

Table 4.2.3-1 Surge Acceleration a_1 at the Centre of Gravity of the Ship

Surge acceleration a_1 (m/s^2)
$a_1 = 3.72 C_{LF\ a1} C_{10} R_{a1} H_{S\ a1}$
Notes: C_{LF_a1}: Coefficient to be taken as: For the maximum load condition(1), $C_{LF_a1} = C_{R_a1} C_{NL_a1}$ C_{R_a1}: Coefficient considering the effect of ship operation, to be taken as 0.85 C_{NL_a1} : Coefficient considering nonlinear effects, to be taken as 0.9 For the cyclic load condition(2), $C_{LF_a1} = C_{F1_a1} C_{F2_a1}$ C_{F1_a1}: Coefficient considering speed effects, to be taken as 0.98 C_{F2_a1}: Conversion coefficient for the exceedance probability level to be considered in the fatigue strength assessment, to be taken as 0.23. C_{10}: Conversion factor for short-crested irregular waves, to be taken as: $C_{10} = C_{11} C_{12}$ C_{11}, C_{12}: As given by the following formulae: $C_{11} = 0.2$ $C_{12} = 0.94$ R_{a1}: Coefficient representing the acceleration in regular waves, to be taken as: $R_{a1} = -0.45 C_{B_LC} \frac{2\pi}{\lambda_{a1}} L_C + 1.32$ λ_{a1}: Wavelength (m), to be taken as: $\lambda_{a1} = 2.12 L_C C_{B_LC} + 29.6$ H_{S_a1}: Significant wave height (m) given by the following formula, but not to be less than 2.0. $H_{S_a1} = -0.21 {T_{Z_a1}}^2 + 5.07 T_{Z_a1} - 15.7$ T_{Z_a1}: Average zero up crossing wave period (s), to be taken as: $T_{Z_a1} = 3.23 \left(\frac{1}{L_C}\right)^{0.26} \cdot \sqrt{\frac{2\pi\lambda_{a1}}{g}}$
(1) To be used for the loads in the maximum load condition among the loads specified in **4.4**, **4.5** and **4.6**. (2) To be used for the loads in the cyclic load condition specified in **4.7**.

4.2.3.2 Sway Acceleration

Sway acceleration a_2 (m/s^2) at the centre of gravity of the ship is to be as given in **Table 4.2.3-2.**

Table 4.2.3-2 Sway Acceleration a_2 at the Centre of Gravity of the Ship

Sway acceleration a_2 (m/s^2)
$a_2 = 3.72 C_{LF\ a2} C_{20} R_{a2} H_{S\ a2}$
Notes: C_{LF_a2}: Coefficient to be taken as: For the maximum load condition(1), $C_{LF_a2} = C_{R_a2} C_{NL_a2}$ C_{R_a2}: Coefficient considering the effect of ship operation, to be taken as 0.85 C_{NL_a2} : Coefficient considering nonlinear effects, to be taken as 0.9 For the cyclic load condition(2), $C_{LF_a2} = C_{F1_a2} C_{F2_a2}$ C_{F1_a2}: Coefficient considering speed effects, to be taken as 1.04 C_{F2_a2}: Conversion coefficient for the exceedance probability level to be considered in the fatigue strength assessment, to be taken 0.23 C_{20}: Conversion factor for short-crested irregular waves, to be taken as: $C_{20} = C_{21} C_{22}$ C_{21}, C_{22}: As given by the following formulae: $C_{21} = 0.027(\ln L_C) + 0.06$ $C_{22} = 0.68$ R_{a2}: Coefficient representing the acceleration in regular waves, to be taken as: $R_{a2} = 6.7\sqrt{\frac{2\pi}{\lambda_{a2} B}}$ λ_{a2}: Wavelength (m), to be taken as: $\lambda_{a2} = 3.0\left(L_C B T_{LC} C_{B_LC}\right)^{0.3}$ H_{S_a2}: Significant wave height (m) given by the following formula, but not to be less than 2.0 $H_{S_a2} = -0.21 {T_{Z_a2}}^2 + 5.07 T_{Z_a2} - 15.7$ T_{Z_a2}: Average zero up crossing wave period (s), to be taken as: $T_{Z_a2} = 1.87\left(\frac{1}{B}\right)^{0.1} \cdot \sqrt{\frac{2\pi\lambda_{a2}}{g}}$
(1) To be used for the loads in the maximum load condition among the loads specified in **4.4**, **4.5** and **4.6**. (2) To be used for the loads in the cyclic load condition specified in **4.7**.

4.2.3.3 Heave Acceleration

Heave acceleration a_3 (m/s^2) at the centre of gravity of the ship is to be as given in **Table 4.2.3-3.**

Table 4.2.3-3 Heave Acceleration a_3 at the Centre of Gravity of the Ship

Heave acceleration a_3 (m/s^2)
$a_3 = 3.72 C_{LF_a3} C_{30} R_{a3} H_{S_a3}$
Notes: C_{LF_a3}: Coefficient to be taken as: For the maximum load condition(1), $C_{LF_a3} = C_{R_a3} C_{NL_a3}$ C_{R_a3}: Coefficient considering the effect of ship operation, to be taken as 0.85 C_{NL_a3}: Coefficient considering nonlinear effects, to be taken as 0.9 For the cyclic load condition(2), $C_{LF_a3} = C_{F1_a3} C_{F2_a3}$ C_{F1_a3}: Coefficient considering speed effects, to be taken as: $C_{F1_a3} = 1.1 + 0.18 f_T$ C_{F2_a3}: Conversion coefficient for the exceedance probability level to be considered in the fatigue strength assessment, to be taken as 0.24 C_{30}: Conversion factor for short-crested irregular waves, to be taken as: $C_{30} = C_{31} C_{32}$ C_{31}, C_{32}: As given by the following formulae: $C_{31} = 0.03 (L_C B C_{W_LC})^{0.18}$ $C_{32} = 0.72$ R_{a3}: Coefficient representing the acceleration in regular waves, to be taken as: $R_{a3} = 1.29 \frac{g}{B C_{B_LC}^{0.12} C_{W_LC}^{0.55}} \exp\left(\frac{2\pi}{\lambda_{a3}} T_{LC} C_{VP_LC}\right)$ λ_{a3} : Wavelength (m), to be taken as: $\lambda_{a3} = \frac{2\pi}{C_{W_LC}} \left(T_{LC} C_{B_LC} + 0.11 \pi B \frac{2 C_{W_LC}^2}{C_{W_LC} + 1}\right)$ H_{S_a3}: Significant wave height (m), given by the following formula, but not to be less than 2.0 $H_{S_a3} = -0.21 T_{Z_a3}^2 + 5.07 T_{Z_a3} - 15.7$ T_{Z_a3}: Average zero up crossing wave period (s), to be taken as: $T_{Z_a3} = 4.4 \left(\frac{1}{L_C B C_{W_LC}}\right)^{0.16} \cdot \sqrt{\frac{2\pi \lambda_{a3}}{g}}$
(1) To be used for the loads in the maximum load condition among the loads specified in **4.4**, **4.5** and **4.6**. (2) To be used for the loads in the cyclic load condition specified in **4.7**.

4.2.3.4 Roll Angular Acceleration

Roll angular acceleration a_4 (rad/s^2) at the centre of gravity of the ship is to be as given in **Table 4.2.3-4.**

Table 4.2.3-4 Roll Angular Acceleration a_4 at the Centre of Gravity of the Ship

Roll angular acceleration a_4 (rad/s^2)
$a_4 = \theta \left(\frac{2\pi}{T_\theta}\right)^2$
Notes: θ, T_θ: As specified in **Table 4.2.2-1**

4.2.3.5 Pitch Angular Acceleration

Pitch angular acceleration a_5 (rad/s^2) at the centre of gravity of the ship is to be as given in **Table 4.2.3-5.**

Table 4.2.3-5 Pitch Angular Acceleration a_5 at the Centre of Gravity of the Ship

Pitch angular acceleration a_5 (rad/s^2)
$a_5 = \phi\left(\frac{2\pi}{T_\phi}\right)^2$
Notes: ϕ, T_ϕ: As specified in **Table 4.2.2-2**

4.2.3.6 Yaw Angular Acceleration

Yaw angular acceleration a_6 (rad/s^2) at the centre of gravity of the ship is to be as given in **Table 4.2.3-6.**

Table 4.2.3-6 Yaw Angular Acceleration a_6 at the Centre of Gravity of the Ship

Yaw angular acceleration a_6 (rad/s^2)
$a_6 = 3.72 C_{LF_a6} C_{60} R_{a6} H_{S_a6}$
Notes: C_{LF_a6}: Coefficient to be taken as: For the maximum load condition, $C_{LF_a6} = C_{R_a6} C_{NL_a6}$ C_{R_a6}: Coefficient considering the effect of ship operation, to be taken as 0.85 C_{NL_a6}: Coefficient considering nonlinear effects, to be taken as 0.9 For the cyclic load condition, $C_{LF_a6} = C_{F1_a6} C_{F2_a6}$ C_{F1_a6}: Coefficient considering speed effects, to be taken as 1.09 C_{F2_a6}: Conversion coefficient for the exceedance probability level to be considered in the fatigue strength assessment, to be taken as 0.23 C_{60}: Conversion factor for short-crested irregular waves, to be taken as: $C_{60} = C_{61} C_{62}$ C_{61}, C_{62} : As given by the following formulae: $C_{61} = 0.18$ $C_{62} = 0.7$ R_{a6}: Coefficient representing the angular acceleration in regular waves, to be taken as: $R_{a6} = \frac{9.5}{{K_{zz}}^2}$ K_{zz}: Radius of gyration (m) around the Z-axis, to be taken as: $K_{zz} = 0.25 L_C$ H_{S_a6}: Significant wave height (m) given by the following formula, but not to be less than 2.0 $H_{S_a6} = -0.21 {T_{Z_a6}}^2 + 5.07 T_{Z_a6} - 15.7$ T_{Z_a6}: Average zero up crossing wave period (s), to be taken as: $T_{Z_a6} = 0.71\sqrt{\frac{2\pi\lambda_{a6}}{g}} + 2.5$ λ_{a6}: Wavelength (m), to be taken as: $\lambda_{a6} = 0.6 L_C$

4.2.4 Envelope Accelerations

4.2.4.1 Envelope Accelerations at Any Position

Envelope accelerations in the ship's longitudinal direction a_{Xe} (m/s^2), those in transverse direction a_{Ye} (m/s^2) and those in vertical direction a_{Ze} (m/s^2) at any position are given in **Table 4.2.4-1.**

Table 4.2.4-1 Envelope Accelerations a_{Xe}, a_{Ye} and a_{Ze} at Any Position

Direction	Envelope acceleration a_{Xe}, a_{Ye} and a_{Ze} (m/s^2)
Longitudinal direction	$a_{Xe} = 0.35\sqrt{{a_1}^2 + [g \cdot \sin\phi + a_5(z - z_G)]^2}$
Transverse direction	$a_{Ye} = \sqrt{{a_2}^2 + [g \cdot \sin\theta + a_4(z - z_G)]^2}$
Vertical direction	$a_{Ze} = \sqrt{{a_3}^2 + \{\max(0, C_{SS}[-g(1-\cos\phi) + a_5\lvert x - x_G\rvert])\}^2 + [\max(0, -g(1-\cos\theta) + a_4\lvert y\rvert)]^2}$

Notes:

x_G: X coordinate (m) at the centre of gravity of the ship to be taken as $x_G = 0.45L_C$. However, the value calculated based on the weight distribution corresponding to the loading condition under consideration may be used.

z_G: Z coordinate (m) at the centre of gravity of the ship, the value(1) in the loading condition under consideration, which is described in the loading manual, is to be used.

a_1: Surge acceleration (m/s^2) at the centre of gravity of the ship, as given in **Table 4.2.3-1**

a_2: Sway acceleration (m/s^2) at the centre of gravity of the ship, as given in **Table 4.2.3-2**

a_3: Heave acceleration (m/s^2) at the centre of gravity of the ship, as given in **Table 4.2.3-3**

a_4: Roll angular acceleration (rad/s^2) at the centre of gravity of the ship, as given in **Table 4.2.3-4**

a_5: Pitch angular acceleration (rad/s^2) at the centre of gravity of the ship, as given in **Table 4.2.3-5**

θ: Roll angle (rad), as given in **Table 4.2.2-1**

ϕ: Pitch angle (rad), as given in **Table 4.2.2-2**

C_{SS}: Coefficient to be taken as:

$$C_{SS} = \min\left(0.3 + \frac{L_C}{325}, 1.0\right)$$

(1) The relevant requirements in **Part 2** may be applied where the value is not available.

4.3 Loads to be Considered in Longitudinal Strength

4.3.1 General

4.3.1.1 General

1 The loads to be considered in the requirements of longitudinal strength specified in **Chapter 5** are to be in accordance with the requirements of this **4.3**.

2 The loads in the maximum load condition are to be in accordance with **4.3.2**.

3 The loads in the harbour condition are to be in accordance with **4.3.3**.

4.3.2 Maximum Load Condition

4.3.2.1 Application

1 The requirements of the wave loads specified in this **4.3.2** are applicable to ships that fall under all of the following **(1)** to **(3)**:

(1) $L_C < 500$

(2) $L_C/B > 5.0$

(3) $B/D < 2.5$

2 For ships which do not fall under any one of **(1)** to **(3)** in **-1** above or those deemed necessary by the Society, the vertical wave bending moment and the vertical wave shear force specified in **4.3.2.3** and **4.3.2.4** are to be calculated by direct load analysis based on the requirements in **1.1.2.4**.

3 For ships deemed necessary by the Society, the horizontal wave bending moment and the torsional wave moment specified in **4.3.2.6** are to be calculated by direct load analysis based on the requirements in **1.1.2.4**.

4.3.2.2 Vertical Still Water Bending Moment and Vertical Still Water Shear Force

1 The maximum and minimum values of vertical still water bending moment and vertical still water shear force are to be the permissible maximum vertical still water bending moment M_{SV_max} (*kN-m*), permissible minimum still water M_{SV_min} (*kN-m*), the permissible maximum vertical still water shear force Q_{SV_max} (*kN*) and permissible minimum vertical still water shear force Q_{SV_min} (*kN*) during voyage.

2 The values of M_{SV_max}, M_{SV_min}, Q_{SV_max} and Q_{SV_min} are, in principle, to be calculated at each transverse bulkhead in the cargo region, at the middle of cargo hold, at the collision bulkhead, at the machinery space forward bulkhead and at the mid-point between the forward and aft machinery space bulkheads. The values at any other position may be obtained by linear interpolation.

3 M_{SV_max}, M_{SV_min}, Q_{SV_max} and Q_{SV_min} at any longitudinal position are to include all the values of the following **(1)** and **(2)**:

(1) The maximum vertical still water bending moment and minimum vertical still water bending moment and the maximum vertical still water shear force and minimum vertical still water shear force in the loading condition during voyage described in the loading manual specified in **3.8.2**

(2) The maximum vertical still water bending moment and minimum vertical still water bending moment and the maximum vertical still water shear force and minimum vertical still water shear force specified by the designer

4 In the application of **-3(2)** above, where the ballast conditions in the actual loading plans (including intermediate conditions specified in **An1.3.1-2 of Annex 3.8 "Items to be Included in Loading Manual"**) involve partially filled ballast tanks, such conditions where such ballast tanks are assumed to be empty or full are to be included in the calculation sheets for longitudinal strength. Where two or more ballast tanks are partially filled simultaneously at departure, arrival or during the intermediate conditions specified in **An1.3.1-2** of **Annex 3.8**, all possible combinations with these ballast tanks empty or full are to be considered in the calculation sheet.

5 In the application of **-3(2)** above, in cargo loaded conditions, the requirements of **-4** above may be applied to the peak tanks only.

6 When ballast water exchange is carried out by the sequential method, the requirements of **-4** and **-5** above may not be applied to the conditions at the stage of each ballasting or de-ballasting in the ballast water exchange sequence. However, bending moment and shear force calculation results in these conditions are to be included in the loading manual or the ballast water management plan of any vessels that intends to employ the sequential ballast water method.

7 In the application of the requirements of **-4** and **-5** above, **Annex 4.3 "Guideline for the Assessment of Longitudinal Strength Relating to Ballasting/Deballasting"** is to be followed.

4.3.2.3 Vertical Wave Bending Moment

1 The vertical wave bending moment in the hogging condition M_{WV-h} (*kN-m*) and the vertical wave bending moment in the sagging condition M_{WV-s} (*kN-m*) at any position are to be obtained from the following formulae:

$$M_{WV-h} = 0.19 C_1 C_2 L_C{}^2 B C_{B1}$$

$$M_{WV-s} = -0.11 C_1 C_2 L_C{}^2 B (C_{B1} + 0.7)$$

C_2: Coefficient of distribution along the ship length, as specified in **Table 4.3.2-1**. Intermediate values are to be obtained by linear interpolation (*See* **Fig. 4.3.2-1**).

Table 4.3.2-1 Coefficient of Distribution along the Ship Length, C_2

x/L_C	C_2
$x/L_C \leq 0$	0.0
$0.4 \leq x/L_C < 0.65$	1.0
$x/L_C \geq 1.0$	0.0

Fig. 4.3.2-1 Coefficient of Distribution along the Ship Length, C_2

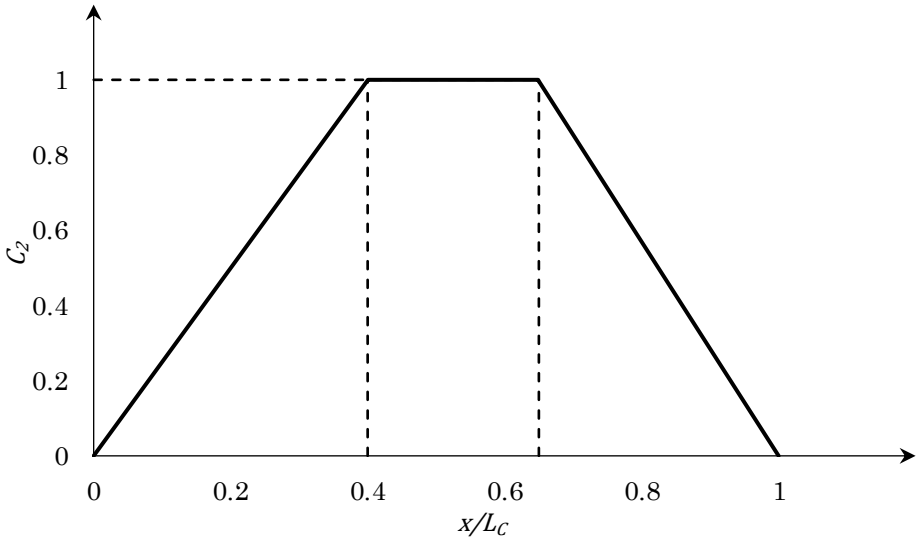

2 In the application of **-1** above to ships with high speed and/or large flares, the values specified in **Table 4.3.2-2** corresponding to C_v instead of the coefficient C_2 in **-1** above are to be used in the range of $0.65 \leq x/L_C \leq 1.0$. However, in the sagging condition, the values corresponding to the value of C_f are also to be considered in accordance with the requirements of **Table 4.3.2-2** (*See* **Fig. 4.3.2-2**).

Table 4.3.2-2 Coefficient C_2 (Ships with High Speed and/or Large Flares)

		Hogging condition		Sagging condition			
C_v		$C_v \leq 0.28$	$0.32 \leq C_v$	$C_v \leq 0.28$	$0.32 \leq C_v$	*N/A*	
C_f		*N/A*		*N/A*		$C_f \leq 0.40$	$0.50 \leq C_f$
C_2(1)	$x/L_C = 0.65$	1.0	1.0	1.0	1.0	1.0	1.0
	$x/L_C = 0.75$	5/7	0.8	5/7	0.8	5/7	0.8
	$x/L_C = 1.0$	0.0	0.0	0.0	0.0	0.0	0.0

Notes:

C_v, C_f: As given by the following formulae:

$$C_v = \frac{0.2V}{\sqrt{L_C}}$$

$$C_f = \frac{0.2V}{\sqrt{L_C}} + \frac{(A_d - A_{w1})}{L_C z_f}$$

A_d: Projected area (m^2) onto a horizontal plane of exposed deck forward of $0.2L_C$ aft of *FE*, including the part forward of *FE*. Where a forecastle is provided, the horizontal area of the forecastle overlaps the aforementioned area.

A_{w1}: Waterplane area (m^2) corresponding to the scantling draught, forward of $0.2L_C$ aft of *FE*.

z_f: Vertical distance (m) from the waterline at the scantling draught to exposed deck, measured at *FE*

(1) Intermediate values of C_v, C_f and x/L_C are to be obtained by linear interpolation.

Fig. 4.3.2-2 Coefficient of Distribution along the Ship Length C_2 for Ships with High Speed and/or Large Flares

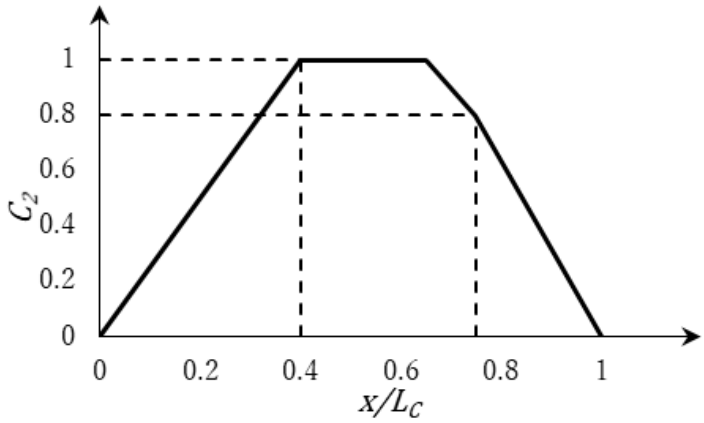

For $0.32 \leq C_v$ or $0.50 \leq C_f$

4.3.2.4 Vertical Wave Shear Force

1 The positive vertical wave shear force Q_{WV-p} (*kN*) and negative vertical wave shear force Q_{WV-n} (*kN*) at any position are to be obtained from the following formulae:

$Q_{WV-p} = 0.3C_1C_{2p}L_CB(C_{B1} + 0.7)$

$Q_{WV-n} = -0.3C_1C_{2n}L_CB(C_{B1} + 0.7)$

C_{2p}: Coefficient of distribution along the ship length, as specified in **Table 4.3.2-3**. Intermediate values are to be obtained by linear interpolation (*See* **Fig. 4.3.2-3**).

C_{2n}: Coefficient of distribution along the ship length, as specified in **Table 4.3.2-3**. Intermediate values are to be obtained by linear interpolation (*See* **Fig. 4.3.2-4**).

Table 4.3.2-3 Coefficient of Distribution along the Ship Length, C_{2p} and C_{2n}

x/L_C	C_{2p}	C_{2n}
$x/L_C \leq 0$	0.0	0.0
$0.2 \leq x/L_C \leq 0.3$	$0.92C_3$	0.92
$0.4 \leq x/L_C \leq 0.6$	0.7	0.7
$0.7 \leq x/L_C \leq 0.85$	1.0	C_3
$x/L_C \geq 1.0$	0.0	0.0

Notes:

C_3: As given by the following formula:

$$C_3 = \frac{190C_{B1}}{110(C_{B1} + 0.7)}$$

Fig. 4.3.2-3 Coefficient of Distribution along the Ship Length, C_{2p}

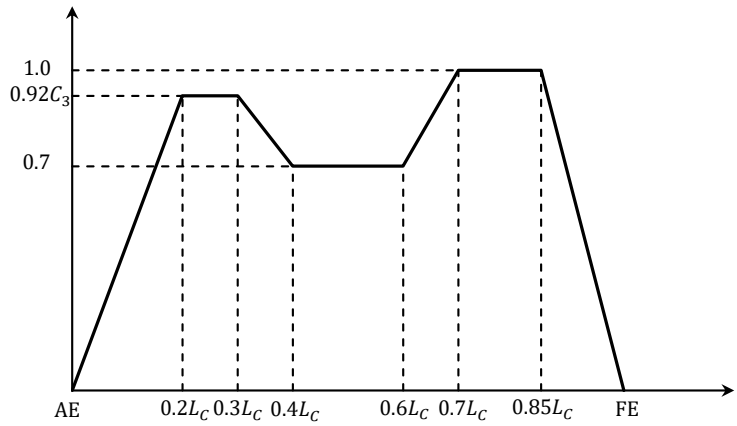

Fig. 4.3.2-4 Coefficient of Distribution along the Ship Length, C_{2n}

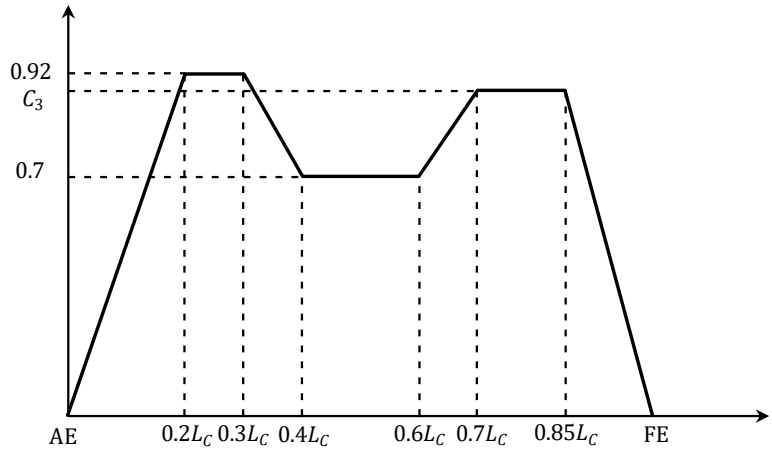

4.3.2.5 Combinations of Loads

The case where the hogging moment is maximised and the case where the sagging moment is maximised are to be considered by combining the hull girder loads in still water and waves for the strength assessment (*See* **Table 4.3.2-4** and **Fig. 4.3.2-5**).

Table 4.3.2-4 Combinations of Vertical Bending Moments and Vertical Shear Forces in Still Water and Waves

Load case	Vertical bending moment		Vertical shear force	
	In still water	In wave	In still water	In wave
Hogging	M_{SV_max}	M_{WV-h}	For $x \leq 0.5L_C$, Q_{SV_max}	For $x \leq 0.5L_C$, Q_{WV-p}
			For $x > 0.5L_C$, Q_{SV_min}	For $x > 0.5L_C$, Q_{WV-n}
Sagging(1)	M_{SV_min}	M_{WV-s}	For $x \leq 0.5L_C$, Q_{SV_min}	For $x \leq 0.5L_C$, Q_{WV-n}
			For $x > 0.5L_C$, Q_{SV_max}	For $x > 0.5L_C$, Q_{WV-p}

Notes:

M_{SV_max}, M_{SV_min}, Q_{SV_max}, Q_{SV_min}: As specified in **4.3.2.2**

M_{WV-h}, M_{WV-s}: As specified in **4.3.2.3**

Q_{WV-p}, Q_{WV-n}: As specified in **4.3.2.4**

(1) Where the minimum value of the vertical still water bending moment is hogging moment, the said hogging moment is taken as M_{SV_min}.

Fig. 4.3.2-5 Schematic Diagram of Load Combinations for Determining Load Cases Where Hogging Moment and Sagging Moments in Table 4.3.2-4 are Maximised

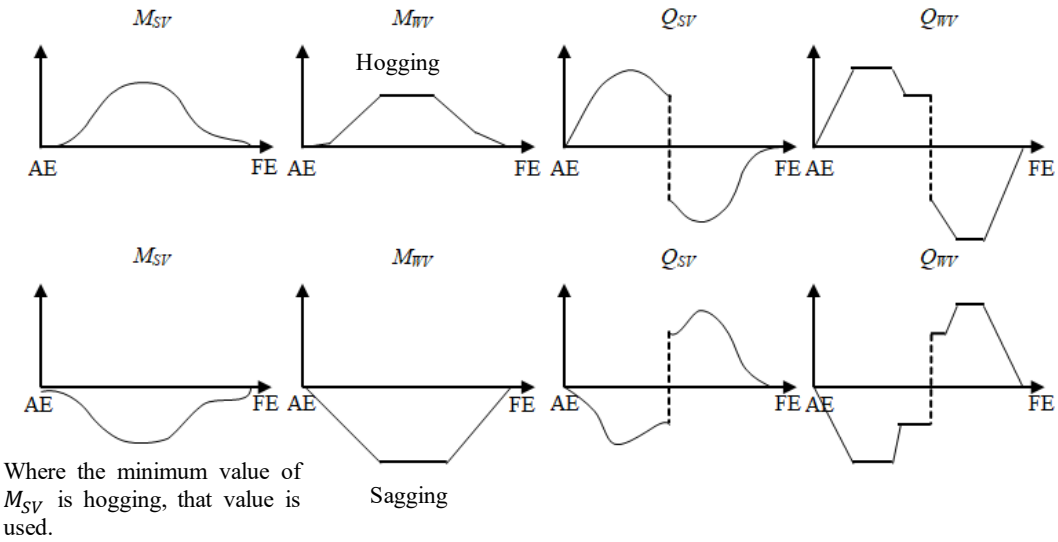

Where the minimum value of M_{SV} is hogging, that value is used.

4.3.2.6 Horizontal Bending Moment and Torsional Moment

For ships where the breadth of the hatchways exceeds $0.7B$ in the midship part, horizontal wave bending moment, torsional still water moment and torsional wave moment are to be considered.

4.3.3 Harbour Condition

4.3.3.1 Vertical Bending Moment in Harbour

1 The vertical bending moments to be considered in the harbour condition are to be the maximum vertical bending moment in harbour M_{PT_max} (kN-m) and the minimum vertical bending moment in harbour M_{PT_min} (kN-m).

2 M_{PT_max} is to be not less than 1.1 *times* the permissible maximum vertical still water bending moment during voyage M_{SV_max} specified in 4.3.2.2. M_{PT_min} is to be not more than 1.1 *times* the permissible minimum vertical still water bending moment during voyage M_{SV_min} specified in 4.3.2.2.

3 Notwithstanding **-2** above, where the maximum vertical bending moment and the minimum vertical bending moment in the loading condition in harbour, in consideration of the loading/unloading sequence, are specified by the designer, the said values are to be considered. In this case, values of M_{PT_max} less than that the value in **-2** above and M_{PT_min} greater than the value in **-2** above may be used. However, M_{PT_max} is not to be less than M_{SV_max} and M_{PT_min} is not to be greater than M_{SV_min}.

4.3.3.2 Vertical Shear Force in Port

1 The vertical shear forces to be considered in the harbour condition are to be the maximum vertical shear force in harbour Q_{PT_max} (kN) and the minimum vertical shear force in harbour Q_{PT_min} (kN).

2 Q_{PT_max} is to be not less than 1.1 *times* the permissible maximum vertical still water shear force during voyage Q_{SV_max} specified in 4.3.2.2. Q_{PT_min} is to be not more than 1.1 *times* the permissible minimum vertical still water shear force during voyage Q_{SV_min} specified in 4.3.2.2.

3 Notwithstanding **-2** above, where the maximum vertical shear force and the minimum vertical shear force in the loading condition in harbour, in consideration of the loading/unloading sequence, are specified by the designer, the values are to be considered. In this case, values of Q_{PT_max} less than the value in **-2** above and Q_{PT_min} greater than the value in **-2** above may be used. However, Q_{PT_max} is not to be less than Q_{SV_max} and Q_{PT_min} is not to be greater than Q_{SV_min}.

4.4 Loads to be Considered in Local Strength

4.4.1 General

4.4.1.1 General

1 The loads to be considered in the requirements of local strength in **Chapter 6** are to be as specified in this **4.4**.

2 The loads in the maximum load condition are to be in accordance with **4.4.2**.

3 The loads in the testing condition are to be in accordance with **4.4.3**.

4 The loads in the flooded condition are to be in accordance with **4.4.4**.

5 Where design loads exceeding the loads specified in **-2** to **-4** above are given, the said loads are to be considered additionally (e.g. where the pressure which may occur using the ballast water management system or due to ballasting in ballast water exchange exceeds the load specified in each requirement).

4.4.2 Maximum Load Condition

4.4.2.1 Load Condition

1 Loads based on the load conditions specified in **Table 4.4.2-1** are to be considered.

2 Consideration of load conditions other than those in **-1** above may be required where deemed necessary by the Society.

Table 4.4.2-1 Concept of Load Conditions

Load condition	Representative feature (in the midship part)
HF	Vertical wave bending moment is maximum.
RP	Hydrodynamic pressure is maximum.

4.4.2.2 Lateral Loads

1 External pressure P_{ex} (kN/m^2) acting on outer shell is to be obtained from the following formula, but not to be less than 0. The load conditions specified in **4.4.2.1** are to be considered.

$P_{ex} = P_{exs} + P_{exw}$

P_{exs} : Hydrostatic pressure (kN/m^2), as specified in **Table 4.4.2-2**

P_{exw} : Hydrodynamic pressure (kN/m^2), as specified in **Table 4.4.2-2**

2 Internal pressure P_{in} (kN/m^2) acting on the hull or tanks due to loaded materials, such as cargo and ballast water, is to be obtained from the following formula, but not to be less than 0. The load conditions specified in **4.4.2.1** are to be considered.

$P_{in} = P_{ins} + P_{ind}$

P_{ins} : Static pressure (kN/m^2) , as specified in **Table 4.4.2-2**

P_{ind} : Dynamic pressure (kN/m^2) , as specified in **Table 4.4.2-2**

3 Notwithstanding **-2** above, deck load P_{dk} (kN/m^2) due to unspecified cargoes and stores in general cargo ships, etc., is to be obtained from the following formula, but not to be less than 0.

$P_{dk} = P_{dks} + P_{dkd}$

P_{dks}: Static pressure (kN/m^2) due to unspecified cargoes and stores in general cargo ships, as specified in **Table 4.4.2-2**

P_{dkd}: Dynamic pressure (kN/m^2) due to unspecified cargoes and stores in general cargo ships, as specified in **Table 4.4.2-2**

4 Green sea pressure P_{GW} (kN/m^2) is to be as specified in **Table 4.4.2-2**

5 For members to which the design load is given, that value is to be used. However, the value of the design load is not to be smaller than any internal pressure derived from the loading condition specified in the loading manual.

Table 4.4.2-2 Lateral Loads

External pressure P_{ex}	Internal pressure P_{in}			Deck loads P_{dk} and P_{GW}	
	Liquid loaded (e.g. liquid cargo, ballast water)	Dry bulk cargo	Other than at left	Unspecified cargoes and stores in general cargo ships, etc.	Green sea pressure
P_{exs} (4.4.2.3-1)	$P_{ins} = P_{ls}$ (4.4.2.4-1)	$P_{ins} = P_{bs}$ (4.4.2.5-1)	$P_{ins} = P_{xs}$ (4.4.2.6)	P_{dks} (4.4.2.7-1)	P_{GW} (4.4.2.8)
P_{exw} (4.4.2.3-2)	$P_{ind} = P_{ld}$ (4.4.2.4-2)	$P_{ind} = P_{bd}$ (4.4.2.5-2)	$P_{ind} = P_{xd}$ (4.4.2.6)	P_{dkd} (4.4.2.7-2)	
Notes: The numbers in parentheses ( ) indicate the sections of the referenced requirements.					

4.4.2.3 External Pressure due to Seawater

1 Hydrostatic pressure P_{exs} (kN/m^2) corresponding to the scantling draught T_{SC} is to be considered (*See* **Table 4.4.2-3**).

Table 4.4.2-3 Hydrostatic Pressure P_{exs}

Position under consideration	Hydrostatic pressure P_{exs} (kN/m^2)
$z \leq T_{SC}$	$\rho g(T_{SC} - z)$
$z > T_{SC}$	0

2 Hydrodynamic pressure P_{exw} (kN/m^2) specified in **Table 4.4.2-4** is to be considered.

Table 4.4.2-4 Hydrodynamic Pressure P_{exw}

Position under consideration	Hydrodynamic pressure P_{exw} (kN/m^2)
$z \le T_{SC}$	$P_{exw} = 0.5C_R C_{NL} C_{WD}\left[(P_d - P_c)\cos\left(\left(2 - \frac{z}{T_{SC}} - C_{yB}\right)\frac{\pi}{2}\right) + (P_d + P_c)\right]$
$T_{SC} < z \le T_{SC} + h_W$	$P_{WL} - \rho g(z - T_{SC})$
$z > T_{SC} + h_W$	0

Notes:

C_R: Coefficient considering the effect of ship operation, to be taken as 0.85

C_{NL}: Coefficient considering nonlinear effects, to be taken as 0.9

C_{WD}: Coefficient for load condition, as given by the following formulae:

In *HF*,

For $x/L_C \le 0.2, C_{WD} = (-2.6 - 1.2C_{yB})\frac{x}{L_C} + 1.0$

For $0.2 < x/L_C \le 0.4, C_{WD} = (2.6 - 1.8C_{yB})\frac{x}{L_C} - 0.04 + 0.12C_{yB}$

For $0.4 < x/L_C \le 0.5, C_{WD} = 1.0 - 0.6C_{yB}$

For $0.5 < x/L_C \le 0.7, C_{WD} = (-1.9 + 1.1C_{yB})\frac{x}{L_C} + 1.95 - 1.15C_{yB}$

For $0.7 < x/L_C, C_{WD} = (1.27 + 1.26C_{yB})\frac{x}{L_C} - 0.27 - 1.26C_{yB}$

C_{yB}: Ratio of the *Y* coordinate of the load calculation point or acceleration calculation point to B_{x1}, as given by the following formula but not more than 1.0. Where $B_{x1} = 0$, to be taken as $C_{yB} = 0$.

$$C_{yB} = \frac{|2y|}{B_{x1}}$$

B_{x1}: Breadth of ship (m) at the waterline of draught in the transverse section of the hull under consideration. Where the waterline does not intersect the transverse section, to be taken as $B_{x1} = 0$.

In *RP*,

For $x/L_C \le 0.3, C_{WD} = \left(2.15 - 1.4\frac{z}{T_{SC}} - 0.25C_{yB}\right)\frac{x}{L_C} + 0.32 + 0.13\frac{z}{T_{SC}} + 0.15C_{yB}$

For $0.3 < x/L_C \le 0.7, C_{WD} = 0.75 - 0.15\frac{z}{T_{SC}} + 0.1C_{yB}$

For $0.7 < x/L_C, C_{WD} = \left(-1.57 + 0.5\frac{z}{T_{SC}} + 0.17C_{yB}\right)\frac{x}{L_C} + 1.85 - 0.5\frac{z}{T_{SC}} - 0.02C_{yB}$

P_d: As given by the following formulae:

For $x/L_C \le 0.3, P_d = 7.292T_{SC} + 1.109B + 69.68 + (0.7315L_C + 146.2)\left(\frac{x}{L_C} - 0.3\right)$

For $0.3 < x/L_C \le 0.7, P_d = 7.292T_{SC} + 1.109B + 69.68$

For $0.7 < x/L_C, P_d = 7.292T_{SC} + 1.109B + 69.68 + (-1223C_W + 1271)\left(\frac{x}{L_C} - 0.7\right)$

P_c: As given by the following formulae:

For $x/L_C \le 0.3, P_c = 2.857T_{SC} - 0.5231B + 14.87 + (-0.1572L_c - 152.8)\left(\frac{x}{L_C} - 0.3\right)$

For $0.3 < x/L_C \le 0.7, P_c = 2.857T_{SC} - 0.5231B + 14.87$

For $0.7 < x/L_C, P_c = 2.857T_{SC} - 0.5231B + 14.87 + (-2447C_W + 2622)\left(\frac{x}{L_C} - 0.7\right)$

P_{WL}: Hydrodynamic pressure (kN/m^2) at the waterline, to be taken as:

For $y \ge 0$, the value of P_{exw} at $y = B_{x1}/2$ and $z = T_{SC}$

For $y < 0$, the value of P_{exw} at $y = -B_{x1}/2$ and $z = T_{SC}$

h_W: Water head (m) equivalent to the pressure at the waterline, to be taken as:

$$h_W = \frac{P_{WL}}{\rho g}$$

(1) In the range of $x/L_C < 0.0$, $x/L_C = 0.0$

(2) In the range of $x/L_C > 1.0$, $x/L_C = 1.0$

4.4.2.4 Internal Pressure due to Liquid Loaded

1 Static pressure P_{ls} (kN/m^2) acting on tanks or ballast holds loaded with liquids is to be as specified in **Table 4.4.2-5**.

Table 4.4.2-5 Internal Static Pressure P_{ls} in Tanks and Ballast Holds Loaded with Liquids

Type of tank or hold	Static pressure P_{ls} (kN/m^2)	
	$z \le z_{top}$	$z > z_{top}$
Cargo tanks fully loaded with liquid cargo (excluding liquefied gas)	$\rho_L g(z_{top} - z) + P_{PV}$	0
Cargo tanks fully loaded with liquefied gas and liquefied gas fuel tanks	$\rho_L g(z_{top} - z) + P_0$	0
Ballast holds	$\rho_L g(z_{top} - z)$	0
Ballast tanks and other tanks	$\rho_L g(z_{top} - z) - P_{BAL}$	0

Notes:

ρ_L: Density of liquid loaded (t/m^3), as specified in **Table 4.4.2-6**

z_{top}: Z coordinate of the highest point (m) of the tank, excluding small hatchways

P_{PV}: Design vapour pressure (kN/m^2), but not to be taken less than 25 kN/m^2

P_0: Design vapour pressure (kN/m^2). For cargo tanks, this value is not to be less than the *MARVS* specified in **1.1.4**, **Part N**. For liquefied gas fuel tanks, this value is not to be less than the *MARVS* specified in **2.2.1**, **Part GF**.

P_{BAL}: Hydrostatic pressure (kN/m^2) at ballast draught T_{BAL} (m) considered as a component for offsetting internal pressure, as specified in **Table 4.4.2-7.** For members subject to simultaneous external and internal pressures, the actual hydrostatic pressure value is to be considered. For other members, the value is to be taken as 0.

Table 4.4.2-6 Density ρ_L of Liquid Loaded

Type of liquid loaded	Density ρ_L (t/m^3)
Ballast water	1.025
Crude oil and petroleum products(1)	0.9
Liquefied gas(1)	Design cargo density
Others(1) (2)	Value deemed appropriate by the Society

Notes:

(1) Where the maximum liquid cargo density in the cargo tank loaded to 98 % of capacity in any loading condition described in the loading manual is greater than the value shown in the table, the said density is to be used.

(2) The following values may be used:
Concentrated sulphuric acid: 1.85
Molasses: 1.4
Asphalt: 1.1
Fresh water: 1.0
Heavy oil C: 0.95
Heavy oil A and lubricating oil: 0.9

Table 4.4.2-7 Hydrostatic Pressure P_{BAL} Considered as Component for Offsetting Internal Pressure

Position under consideration	Hydrostatic pressure P_{BAL} (kN/m^2)
$z \le T_{BAL}$	$\rho g(T_{BAL} - z)$
$z > T_{BAL}$	0

2 Dynamic pressure P_{ld} (kN/m^2) acting on tanks and ballast holds loaded with liquids is to be as specified in **Table 4.4.2-8**.

Table 4.4.2-8 Dynamic Pressure P_{ld} Acting in Tanks or Ballast Holds Loaded with Liquids

Type of loaded compartment	Dynamic pressure P_{ld} (kN/m^2)(1)(2)	
	$z \le z_{top}$	$z > z_{top}$
Cargo tanks fully loaded with liquid cargo including liquefied gas, ballast holds and liquefied gas fuel tanks	$\rho_L\sqrt{[C_{WDx}a_{Xe-l}(x_{TG}-x)]^2+\left[C_{WDy}a_{Ye-l}(y_{TG}-y)\right]^2+[C_{WDz}a_{Ze-l}(z_0-z)]^2}$	0
Others (e.g. ballast tanks)	$\rho_L\sqrt{[C_{WDx}a_{Xe-l}(x_0-x)]^2+\left[C_{WDy}a_{Ye-l}(y_0-y)\right]^2+[C_{WDz}a_{Ze-l}(z_0-z)]^2}$	0

Notes:

ρ_L: As specified in **Table 4.4.2-6**

C_{WDx}: Coefficient for load condition to be taken as:

For HF, $C_{WDx} = 0.86$

For RP, $C_{WDx} = 0.0$

C_{WDy}: Coefficient for load condition to be taken as:

For HF, $C_{WDy} = 0.0$

For RP, $C_{WDy} = 1.0$

C_{WDz}: Coefficient for load condition to be taken as:

In HF,

For $0.0 \le x/L_C \le 0.3, C_{WDz} = -2.73\frac{x}{L_C} + 1.0$

For $0.3 < x/L_C \le 0.7, C_{WDz} = 2.05\frac{x}{L_C} - 0.435$

For $0.7 < x/L_C \le 1.0, C_{WDz} = 1.0$

In RP,

For $0.0 \le x/L_C \le 0.3, C_{WDz} = 1.37\frac{x}{L_C} + 0.59$

For $0.3 < x/L_C \le 0.7, C_{WDz} = 1.0$

For $0.7 < x/L_C \le 1.0, C_{WDz} = -1.27\frac{x}{L_C} + 1.89$

$a_{Xe-l}, a_{Ye-l}, a_{Ze-l}$: Envelope acceleration (m/s^2) in the longitudinal, transverse and vertical directions at the volumetric centre of gravity of the tank or ballast hold under consideration, to be calculated in accordance with the requirements in **4.2.4.1**(3)(4)

x_{TG}, y_{TG}: X and Y coordinates (m) at the volumetric centre of gravity of the tank or ballast hold under consideration

x_0, y_0, z_0: X, Y, and Z coordinates (m) of the reference point(5)

z_{top}: As specified in **Table 4.4.2-5**

(1) In the range of $x/L_C < 0.0$, to be taken as $x/L_C = 0.0$

(2) In the range of $x/L_C > 1.0$, to be taken as $x/L_C = 1.0$

(3) Where the types of loaded compartments are cargo tanks fully loaded with liquid cargo (including liquefied gas) and ballast holds, the values of K_{xx}, GM, etc. may be calculated by the following formulae in order to obtain the envelope accelerations to be used for the dynamic pressure. However, GM is not to be less than $0.002B^2$. When the values are specified in the relevant requirements of **Part 2**, the values are to be in accordance with the requirements of **Part 2**.

$$K_{xx} = 0.38B$$

$$GM = \frac{T_{LC}}{2} + \frac{B^2}{T_{LC}C_{B_LC}}\frac{3C_{W_LC}-1}{24} - z_G$$

$$T_{LC} = \frac{1}{n_{CH}}T_{SC} + \frac{n_{CH}-1}{n_{CH}}T_{BAL}$$

$$z_G = \left(0.05\frac{1}{n_{CH}} + 0.2\right)\frac{B}{C_{B_LC}}$$

n_{CH} : Total number of cargo holds

(4) Where the type of loaded compartment is others (e.g. ballast tank), the values of K_{xx}, GM, etc. may be calculated by the following formulae

in order to obtain the envelope accelerations to be used for dynamic pressure. However, GM is not to be less than $0.002B^2$. When the values are specified in the relevant requirements of **Part 2**, the value are to be in accordance with the requirements of **Part 2**.

$$K_{xx} = 0.40B$$
$$GM = \frac{T_{LC}}{2} + \frac{B^2}{T_{LC}C_{B_LC}}\frac{3C_{W_LC} - 1}{24} - z_G$$
$$T_{LC} = T_{BAL}$$
$$z_G = 0.2\frac{B}{C_{B_LC}}$$

(5) The reference point is to be taken as the point with the highest value of V_j, calculated for all points that define the upper boundary of the tank or the ballast hold excluding the points located at the height equal to or below the volumetric centre of gravity of the said tank and hold.

$$V_j = C_{WDx}a_{Xe-l}|x_j - x| + C_{WDy}a_{Ye-l}|y_j - y| + C_{WDz}a_{Ze-l}|z_j - z| + g(z_j - z)$$

x_j, y_j, z_j: X, Y and Z coordinates of point j (m) on the upper boundary of the tank or the ballast hold excluding the points located at the height equal to or below the volumetric centre of gravity of the said tank and hold

4.4.2.5 Internal Pressure due to Dry Bulk Cargo

1 Static pressure P_{bs} (kN/m^2) acting on cargo holds loaded with dry bulk cargo is to be as specified in **Table 4.4.2-9**.

Table 4.4.2-9 Static Pressure P_{bs} in the Cargo Holds Loaded with Dry Bulk Cargo

Position under consideration	Static pressure P_{bs} (kN/m^2)(1)
$z \le z_C$	$\rho_C K_C g(z_C - z)$
$z > z_C$	0

Notes:

ρ_C: Density of dry bulk cargo (t/m^3), as specified in **Table 4.4.2-10**(2)

K_C: Coefficient of the earth pressure, to be taken as:

For inner bottom plating, hopper tanks, transverse bulkheads, longitudinal bulkheads, lower stools, vertical upper stools and side shells,

$$K_C = \cos^2\alpha + (1 - \sin\psi)\sin^2\alpha$$

For top side tanks, main deck and sloped upper stools,

$$K_C = 0$$

α: Inclination angle (rad) to the horizontal plane of the panel under consideration. However, when α exceeds $\pi/2$, α is to be taken as $\pi/2$.

ψ: Angle of repose of dry bulk cargo (rad), as given by the formulae:

For iron ore and coal, $\psi = 0.611$ (i.e. 35 deg)

For cement, $\psi = 0.436$ (i.e. 25 deg)

For others, $\psi = 0.524$ (i.e. 30 deg)

z_C: Height of the upper surface of the cargo (m) above the baseline in way of the point on which the load is act, as given by the following **(1)** and **(2)**. The value of z_C is to be taken as constant in the longitudinal direction of the cargo hold under consideration.

(1) Where cargo is loaded up to the top of the hatch coaming

$$z_C = z_{DB} + h_{C_CL}$$

z_{DB}: Height (m) from the baseline to the inner bottom plating at the centreline, measured at the mid-length in the longitudinal direction of the cargo hold under consideration

h_{C_CL}: Height (m) from the inner bottom plating to the upper surface of dry bulk cargo at the centreline, measured at the mid-length in the longitudinal direction of the cargo hold under consideration (*See* **Fig. 4.4.2-1**), as given by the following formula:

$$h_{C_CL} = \frac{1}{B_H}\left(S_C + \frac{V_{HC}}{\ell_H}\right)$$

S_C: Area (m^2) from the bottom plating of the cargo hold to the lower end of the hatch side coaming, measured at the mid-length in the longitudinal direction of the cargo hold under consideration (*See* **Fig. 4.4.2-1**)

V_{HC}: Volume of the hatch coaming of the cargo hold under consideration (m^3) from the lower end to the top of the hatch coaming (*See* **Fig. 4.4.2-2**)

ℓ_H: Length of the cargo hold (m) at the centreline between the transverse bulkheads (*See* **Fig. 4.4.2-2**). As for cargo hold with corrugated bulkheads, ℓ_H is to be the distance between the mid-depth of the corrugated bulkheads.

B_H: Breadth (m) of the cargo hold measured at the mid-height between the lower end of the hatch coaming and the bottom plating of the cargo hold under consideration, determined at the mid-length in the longitudinal direction of the said cargo hold (*See* **Fig. 4.4.2-1**)

(2) For cases other than **(1)** above (e.g. where high density cargo is loaded)

$z_C = z_{DB} + h_C$

h_C: Height (m) from the inner bottom plating at the centreline to the upper surface of the dry bulk cargo, measured at the mid-length in the longitudinal direction of the cargo hold under consideration (*See* **Fig. 4.4.2-1**), to be obtained so that the value of the cargo volume divided by ℓ_H is equivalent to the area(3) of the cargo at the mid-length in the longitudinal direction of the said cargo hold. The cargo volume is to be as specified in **Table 4.4.2-10.**

(1) Where the upper surface of the cargo is at the position of the hatch coaming, the loads acting on the said member may not be considered.

(2) Both low density cargo and high density cargo are to be considered where deemed necessary by the Society.

(3) The upper surface of the cargo is to be horizontal in the longitudinal and transverse directions in the range of 1/2 of B_H on each side of the centreline, and is to be sloped linearly at each side from the edge of the horizontal plane towards the ship side, with the angle equal to half of the angle of repose.

Table 4.4.2-10 Dry Bulk Cargo Mass and Density

	Full load condition (homogeneous loading condition)		Full load condition (alternate loading condition)	
	Cargo loaded to the top of hatch coaming	Other than the left (e.g. high density cargo loaded, etc.)	Cargo loaded to the top of hatch coaming	Other than the left (e.g. high density cargo loaded, etc.)
Dry bulk cargo mass M (t)	M_{Full}	M_H	M_{HD}	M_{HD}
Cargo density ρ_C (t/m^3)	$\frac{M_{Full}}{V_{Full}}$	3.0(1)	$\frac{M_{HD}}{V_{Full}}$	3.0(1)

Notes:

M_{Full}: Cargo mass (t) when loaded to the top of the hatch coaming

M_H: Cargo mass (t) when loaded in the cargo hold under consideration in the homogeneous loading condition with scantling draught (all ballast tanks empty)

M_{HD}: Designed maximum cargo mass (t) to be loaded in the cargo hold under consideration with scantling draught

V_{Full}: Volume of cargo hold (m^3) including the volume around the hatch coaming

(1) To be taken as 3.0 unless the designed maximum cargo density is specified in the loading manual.

Fig. 4.4.2-1 Cargo Hold Loaded with Dry Bulk Cargo

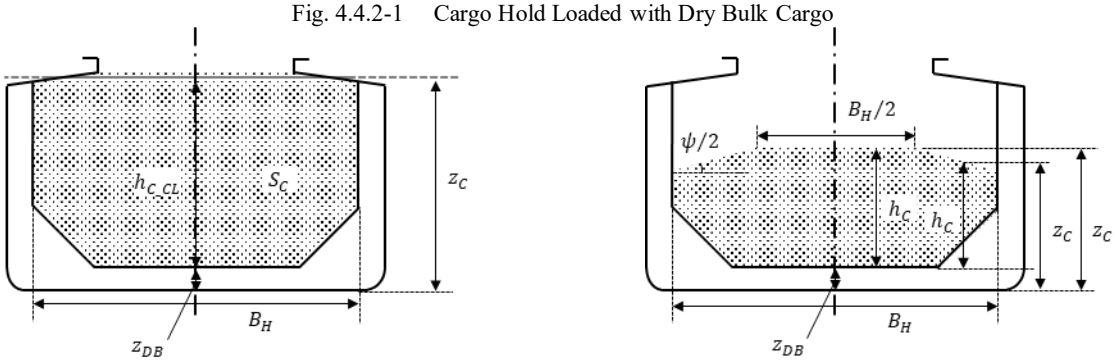

Where cargo is loaded to the top of hatch coaming

Other than the left figure (high density cargo loaded, etc.)

Fig. 4.4.2-2 Cargo Hold Loaded with Dry Bulk Cargo

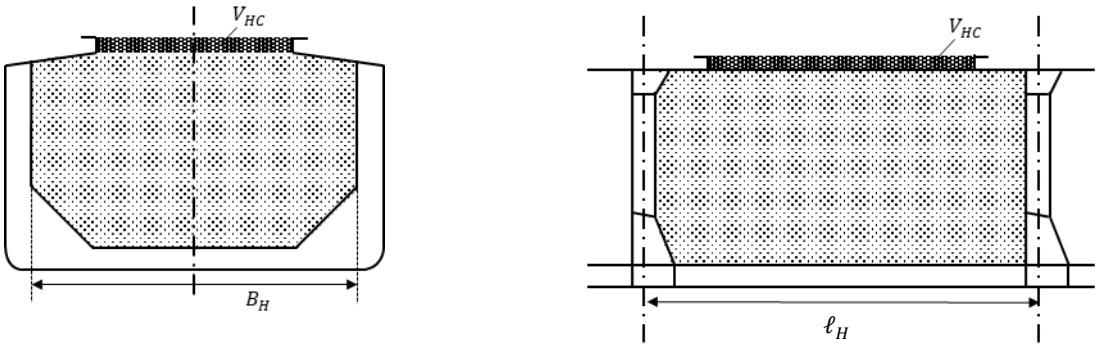

Transverse section

Longitudinal section

2 Dynamic pressure P_{bd} (kN/m^2) acting on cargo holds loaded with dry bulk cargo is to be as specified in **Table 4.4.2-11**.

Table 4.4.2-11 Dynamic Pressure P_{bd} in Cargo Hold Loaded with Dry Bulk Cargo

Position under consideration	Dynamic pressure P_{bd} (kN/m^2)(1)
$z \le z_C$	$\rho_C\sqrt{(C_{WDx}C_{bx}a_{Xe-b}x_b)^2 + (C_{WDy}C_{by}a_{Ye-b}y_b)^2 + (C_{WDz}C_{bz}K_C a_{Ze-b}z_b)^2}$
$z > z_C$	0

Notes:

ρ_C, K_C: As specified in **Table 4.4.2-9**

$C_{WDx}, C_{WDy}, C_{WDz}$: As specified in **Table 4.4.2-8**

C_{bx}: Coefficient considering the effect of friction between particles of granular cargoes, etc. to be taken as 0.34

C_{by}: Coefficient considering the effect of friction between particles of granular cargoes etc. to be taken as 0.34

C_{bz}: Coefficient considering the effect of friction between particles off granular cargoes etc. to be taken as 1.00

$a_{Xe-b}, a_{Ye-b}, a_{Ze-b}$: Envelope accelerations (m/s^2) in the longitudinal, transverse and vertical directions at the volumetric centre of gravity of the cargo hold under consideration, calculated in accordance with the requirements of **4.2.4.1**(2) (3)

x_b, y_b, z_b: As given by the following formulae:

$$x_b = |x_{HG} - x|$$
$$y_b = |y_{HG} - y|$$
$$z_b = z_C - z$$

x_{HG}, y_{HG}: X and Y coordinates (m) at volumetric centre of gravity of the cargo hold under consideration

z_C: As specified in **Table 4.4.2-9**

(1) Where the upper surface of the cargo is at the position of the hatch coaming, the loads acting on the said member may not be considered.

(2) The values of K_{xx}, GM, etc. may be calculated by the following formulae in order to obtain the envelope accelerations to be used for dynamic pressure in the cargo hold. However, GM is not to be less than $0.002B^2$. Where the value of GM is specified in the relevant requirements of **Part 2**, GM is to be in accordance with **Part 2**.

$$K_{xx} = 0.35B$$
$$GM = \frac{T_{SC}}{2} + \frac{B^2}{T_{SC}C_B}\frac{3C_W - 1}{24} - z_G$$
$$T_{LC} = T_{SC}$$
$$z_G = 0.25\frac{B}{C_B}$$

(3) Z coordinate (m) at the volumetric centre of gravity to be taken as:
(a) When cargo is loaded to the top of the hatch coaming, to be taken as $z_{DB} + h_{C_CL}/2$.
(b) In other cases, to be taken as $z_{DB} + h_C/2$. h_C is to be taken as the value at the centreline.

4.4.2.6 Internal Pressure other than Liquid Loaded and Dry Bulk Cargoes

Static pressure P_{xs} (kN/m^2) due to the loaded material not corresponding to **4.4.2.4** to **4.4.2.5** is to be calculated by dividing the weight of the loaded material (kN) by the area (m^2) in the range subject to the said loaded material. Dynamic pressure P_{xd} (kN/m^2) is to be the pressure for which the envelope accelerations specified in **4.2.4.1** are considered. A line load or a point load instead of pressure is to be considered depending on the type of the loaded material.

4.4.2.7 Internal Pressure due to Unspecified Cargoes and Stores on General Cargo Ships, etc.

1 Static pressure P_{dks} (kN/m^2) due to unspecified cargoes and stores on general cargo ships, etc. is to be in accordance with the following **(1)** to **(3)**:

(1) The design maximum cargo weight per unit area of deck (kN/m^2) is to be used. However, where the value has not been obtained beforehand, the following formula may be used:

$$P_{dks} = 0.71gh_{gc}$$

h_{gc} : Height of the loaded cargo corresponding to the structural arrangement directly above the place under consideration, given by taking the tween deck height (m) at the side of the space, or the height (m) from the deck concerned to the top of the hatch coaming of the deck above

(2) Where timber and/or other cargoes are intended to be carried on the exposed deck, the design maximum cargo weight (kN/m^2) per unit area of deck

(3) Where cargoes are suspended from the deck beams or deck machinery is installed, the static pressure P_{dks} (kN/m^2) is to be

suitably increased.

2 Dynamic pressure P_{dkd} (kN/m^2) due to unspecified cargoes and stores on general cargo ships, etc. is to be in accordance with the following formula:

$$P_{dkd} = C_{WDz} P_{dks} \frac{a_{Ze}}{g}$$

C_{WDz}: As specified in **Table 4.4.2-8**

a_{Ze}: Envelope acceleration (m/s^2) in the vertical direction specified in **4.2.4.1**. In obtaining the dynamic pressure acting on the cargo hold, the average value between the value of acceleration at the forward and aft ends, whichever is greater, of the cargo hold at the centreline and the value at the mid-length of the cargo hold may be taken. In obtaining the dynamic pressure, the values of K_{xx}, GM, etc. may be calculated by the following formulae:

$$K_{xx} = 0.35B$$

$$GM = \frac{T_{SC}}{2} + \frac{B^2}{T_{SC}C_B}\frac{3C_W - 1}{24} - z_G$$

$$T_{LC} = T_{SC}$$

$$z_G = 0.25\frac{B}{C_B}$$

4.4.2.8 Green Sea Pressure Acting on Weather Deck

1 Green sea pressure P_{GW} (kN/m^2) acting on the exposed freeboard deck is to be in accordance with the following **(1)** to **(3)**.

(1) P_{GW} is not to be less than the value obtained from the following formula:

$$a[bf - (z - T_{SC})]$$

a: Value depending on the position of the decks, as specified in **Table 4.4.2-13**

b: As given by the following formulae:

For $x/L_C < 0.45, 1.0 + \left(\frac{0.45 - \frac{x}{L_C}}{C_{B2} + 0.2}\right)^2$

For $x/L_C \geq 0.45, 1.0 + 1.5\left(\frac{\frac{x}{L_C} - 0.45}{C_{B2} + 0.2}\right)^2$

f: As specified in **Table 4.4.2-12** (*See* **Fig. 4.4.2-3**)

(2) P_{GW} calculated from line II in **Table 4.4.2-13** may not exceed the minimum value of P_{GW} calculated in the range for line I.

(3) Notwithstanding the requirements of **(1)** and **(2)** above, P_{GW} is not to be less than P_{GW_min} (kN/m^2) in **Table 4.4.2-13.**

2 In application of **-1** above, a exposed deck may be regarded as the following **(1)** to **(3)** in relation to the vertical distance H_D (m) from an assumed freeboard deck to the exposed deck at the side. The standard height of superstructure h_S (m) is in accordance with **1.4.3.3**.

(1) For $h_S \leq H_D < 2h_S$: Superstructure deck of first tier above the freeboard deck

(2) For $2h_S \leq H_D < 3h_S$: Superstructure deck of second tier above the freeboard deck

(3) For $3h_S \leq H_D$: Superstructure deck of third tier above the freeboard deck

Table 4.4.2-12 Value of f

L_C	f
$L_C < 150$	$\frac{L_C}{10}\exp\left(-\frac{L_C}{300}\right) + \left(\frac{L_C}{150}\right)^2 - 1.0$
$150 \leq L_C < 300$	$\frac{L_C}{10}\exp\left(-\frac{L_C}{300}\right)$
$300 \leq L_C$	11.03

Fig. 4.4.2-3 Value of f

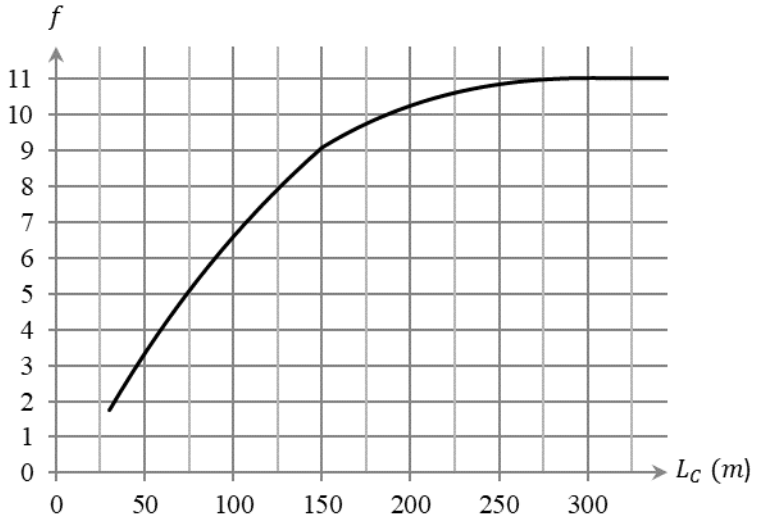

Table 4.4.2-13 Values of a and P_{GW_min}

Line	Position of deck	a	P_{GW_min}	C
		Stiffener(1) and deck		Stiffener(1) and deck
I	$x/L_C \geq 0.85$	14.7	$C\sqrt{L_{C230}+50}$	4.20
II	$0.7 \leq x/L_C < 0.85$	11.8		
III	$0.2 \leq x/L_C < 0.7$	6.90		2.05
IV	$x/L_C < 0.2$	9.80	$C\sqrt{L_{C230}}$	2.95
Second tier superstructure deck above freeboard deck(2)				1.95

Notes:

(1) For ships with L_C not exceeding 150 m, the values of a and C for stiffeners may be multipled by the value obtained by the following formula:

$$0.55\left(\frac{L_C}{100}\right)+0.175$$

(2) The values in line I through line IV are to be used for a on the second tier superstructure deck above freeboard deck.

4.4.2.9 Hull Girder Loads

1 Vertical bending moment M_{V-HG} (kN-m) acting on the hull is to be in accordance with the absolute value of the following formulae, whichever is greater:

$$M_{V-HG} = M_{SV_max} + C_{WD-V}M_{WV-h}$$

$$M_{V-HG} = M_{SV_min} + C_{WD-V}M_{WV-s}$$

M_{SV_max}: Permissible maximum vertical still water bending moment (kN-m) in **4.3.2.2**

M_{SV_min}: Permissible minimum vertical still water bending moment (kN-m) in **4.3.2.2**

M_{WV-h}: Vertical wave bending moment (kN-m) in the hogging condition calculated, obtained from the following formula:

$$M_{WV-h} = 0.19C_1C_2{L_C}^2BC_{B1}$$

C_2: As specified in **Table 4.4.2-14**. Intermediate values are to be obtained by linear interpolation. For ships with high speed and/or large flares, use of the values given in **Table 4.3.2-2** may be required where deemed necessary by the Society.

M_{WV-s}: Vertical wave bending moment (kN-m) in the sagging condition, obtained from the following formula:

$$M_{WV-s} = -0.11C_1C_2{L_C}^2B(C_{B1}+0.7)$$

C_2: As specified in **Table 4.4.2-14**. Intermediate values are to be obtained by linear interpolation. For ships with high speed and/or large flares, use of the values given in **Table 4.3.2-2** may be required where deemed necessary by the

Society.

C_{WD-V}: For the load conditions *HF* and *RP*, to be as specified in **Table 4.4.2-15**. When considered in combination with green sea pressure, to be taken as 0.9.

2 Horizontal bending moment M_{H-HG} (*kN-m*) acting on the hull is to be in accordance with the following formula:

$M_{H-HG} = C_{WD-H} M_{WH}$

M_{WH}: Horizontal wave bending moment (*kN-m*), to be taken as:

$$M_{WH} = 0.32 C_R C_1 C_3 L_C{}^2 T_{SC} \sqrt{\frac{L_C - 35}{L_C}}$$

C_R: Coefficient considering the effect of ship operation, to be taken as 0.85

C_3: As specified in **Table 4.4.2-14**. Intermediate values are to be obtained by linear interpolation.

C_{WD-H}: For the load conditions *HF* and *RP*, to be as specified in **Table 4.4.2-15.** When considered in combination with green sea pressure, to be taken as 0.0.

Table 4.4.2-14 Coefficient of Distribution along the Ship Length, C_2 and C_3

x/L_C	C_2	C_3
$x/L_C \leq 0$	0.0	0.0
$x/L_C = 0.35$	0.875	1.0
$x/L_C = 0.4$	1.0	1.0
$x/L_C = 0.65$	1.0	1.0
$x/L_C \geq 1.0$	0.0	0.0

Table 4.4.2-15 Coefficients C_{WD-V} and C_{WD-H} for Load Conditions

Load condition	M_{WV-h} or M_{WV-s}	M_{WH}
	C_{WD-V}	C_{WD-H}
HF	1.0	0.0
RP	0.35	0.35

4.4.3 Testing Condition

4.4.3.1 External Pressure*

The following **(1)** and **(2)** are to be considered as external pressure acting on the hull.

(1) Case 1 (P_{ST-ex1}): Hydrostatic pressure (kN/m^2) corresponding to the draught described in the test plan at Classification Surveys during Construction approved by the Society in accordance with item10(1), **Table B2.7, Part B**.

(2) Case 2 (P_{ST-ex2}): Hydrostatic pressure (kN/m^2) corresponding to the draught T_{BAL} or $0.33T_{SC}$, whichever is smaller. However, where the draught of pressure tests at Special Surveys is given in the loading manual, the hydrostatic pressure corresponding to said draught may be considered instead.

4.4.3.2 Internal Pressure

1 Internal pressure P_{ST-in1} and P_{ST-in2} (kN/m^2) acting on the hull and tanks is to be in accordance with **Table 4.4.3-1.**

2 When a hydrostatic test is conducted under a condition exceeding the pressure specified in **-1** above, the actual pressure which occurs in the test is to be used.

3 When external pressure is considered as a component offsetting the internal pressure in a member subjected to simultaneous internal and external pressure, the external pressure specified in **4.4.3.1** may be considered, identical cases are to be combined.

Table 4.4.3-1 Internal Pressure P_{ST-in1} and P_{ST-in2} in Testing Condition

Position under consideration		Internal pressure P_{ST-in1} and P_{ST-in2} (kN/m^2)
Case 1	$z \le z_{ST}$	$P_{ST-in1} = \rho g(z_{ST} - z)$
	$z > z_{ST}$	0
Case 2(1)	$z \le z_{top}$	$P_{ST-in2} = \rho g(z_{top} + h_{air} - z) + 25$
	$z > z_{top}$	0

Notes:

z_{ST}: Height (m) of water head for hydrostatic test, as specified in **Table 4.4.3-2**

z_{top}: Z coordinate of the highest point (m) of the tank, excluding small hatchways

h_{air}: Height (m) of air pipe or overflow pipe above the top of the tank

(1) Compartments to be assessed are ballast tanks only.

Table 4.4.3-2 Design Testing Water Head Height z_{ST}

Compartment	z_{ST}
Double bottom tanks(1)	$z_{ST} = \max(z_{top} + h_{air}, z_{top} + 2.4, z_{bd})$(3)
Double side tanks	$z_{ST} = \max(z_{top} + h_{air}, z_{top} + 2.4, z_{bd})$(3)
Deep tanks not described in this Table	$z_{ST} = \max(z_{top} + h_{air}, z_{top} + 2.4)$(3)
Cargo oil tanks	$z_{ST} = \max(z_{top} + h_{air}, z_{top} + 2.4, z_{top} + z_{PV})$(3)
Ballast holds of bulk carriers	$z_{ST} = z_{hc}$
Peak tanks (fore and aft peak tanks)	$z_{ST} = \max(z_{top} + h_{air}, z_{top} + 2.4)$(3)
Chain lockers	$z_{ST} = z_c$
Ballast ducts	$z_{ST} = \max(z_{bp}, z_{PRV})$
Fuel oil tanks	$z_{ST} = \max(z_{top} + h_{air}, z_{top} + 2.4, z_{top} + z_{PV}, z_{bd})$(3)
Cargo tanks of ships carrying dangerous chemicals in bulk(2)	$z_{ST} = \max(z_{top} + 2.4, z_{top} + z_{PV})$(3)
Cargo tanks of ships carrying liquefied gas in bulk	According to **Part N**
Low-flashpoint fuel tanks for storing natural gas	According to **Part GF**
Edible liquid tanks (independent tanks)	$z_{ST} = \max(z_{top} + h_{air}, z_{top} + 0.9)$
Fuel oil overflow tanks not intended to hold fuel	$z_{ST} = \max(z_{top} + h_{air}, z_{top} + 2.4, z_{bd})$(3)

Notes:

z_{top}: Z coordinate of the top of tank (m) (the highest point of the tank excluding small hatchways)

z_{bd}: Z coordinate of the bulkhead deck (m)

z_{PRV}: Z coordinate of the test water head (m) corresponding to the setting of pressure relief valve

z_{PV}: Height of the test water head (m) corresponding to the design vapour pressure

z_{hc}: Z coordinate of the top of hatch coaming (m)

z_c: Z coordinate of the top of chain pipe (m)

z_{bp}: Z coordinate of the test water head (m) corresponding to maximum pressure of ballast pump

h_{air}: Height of the air pipe or overflow pipe (m) above the top of the tank

(1) For double bottom tanks connected with hopper side tanks, topside tanks or double side tanks, z_{ST} corresponding to "hopper side tanks, topside tanks, double side tanks, fore and aft peaks used as tanks, and cofferdams" is applicable.

(2) For tanks loaded with cargoes having specific gravity exceeding 1.0, an additional water head in accordance with *Note*3,* **Table An1.4-2, Annex 2.1.5 Part B** is to be considered.

(3) For ships not subject to *SOLAS Convention*, "0.3*D* + 0.76, but not greater than 2.4" can be used instead of "2.4", where *D* is the depth of the ship (*m*).

4.4.3.3 Vertical Bending Moment

In the Testing condition, the vertical bending moment acting on the hull may be assumed to be 0 *kN-m*.

4.4.4 Flooded Condition

4.4.4.1 Internal Pressure

Internal pressure P_{FD-in} (kN/m^2) acting on the watertight wall in flooded compartments is to be in accordance with **Table 4.4.4-1** but is not to be less than 0.

Table 4.4.4-1 Internal Pressure P_{FD-in} in Flooded Condition

Internal pressure P_{FD-in} (kN/m^2)
$P_{FD-in} = \rho g h_{FD}$
Notes: h_{FD}: Assumed draught height (*m*) at the time of flooding from the position under consideration, as given by the following formula: $h_{FD} = \max(z_{FB} - z, \lvert y \rvert \sin\theta_{FD} + (z_{FD} - z)\cos\theta_{FD})$ z_{FB}: *Z* coordinate (*m*) of the freeboard deck at side in way of the transverse section of the hull under consideration z_{FD}: *Z* coordinate (*m*) of the greatest value among deepest equilibrium waterline at the centreline amidships (1) (2) (3) θ_{FD}: The greatest value among the deepest equilibrium heel angle (*rad*) (1) (2) (3).
(1) When the maximum draught was obtained based on the combination of z_{FD} and θ_{FD} in each case to be considered in damage stability calculations, the said draught may be regarded as the assumed draught height. (2) For ships applying the damage stability requirements specified in **2.3**, the case where the probability of survival is 0 is excluded (i.e. is not to be considered). In addition, the case where the compartment adjacent to members being assessed does not flood and the case where two adjacent compartments simultaneously flood may be excluded. (3) For ships other than **(2)** above (i.e. ships not applying probabilistic damage stability requirements), the case where the compartment adjacent to members being assessed does not flood and the case where two adjacent compartments simultaneously flood may be excluded.

4.4.4.2 Vertical Bending Moment in Flooded Condition

1 The maximum vertical bending moment in the flooded condition M_{FD_max} (*kN-m*) and the minimum vertical bending moment in the flooded condition M_{FD_min} (*kN-m*) acting on the hull are to be in accordance with the absolute value of the following formulae, whichever is greater:

$$M_{FD_max} = M_{SV_max} + 0.45 M_{WV-h}$$

$$M_{FD_min} = M_{SV_min} + 0.45 M_{WV-s}$$

M_{SV_max}, M_{SV_min}: As specified in **4.3.2.2**

M_{WV-h}, M_{WV-s}: As specified in **4.3.2.3**

2 For ships where the vertical still water bending moment in the flooded condition is described in the loading manual, where the maximum vertical still water bending moment is greater than M_{FD_max} in **-1** above and/or where the minimum vertical still water vertical bending moment is less than M_{FD_min} in **-1** above, the maximum and/or minimum vertical still water bending moment are to be considered instead of those in **-1** above.

4.5 Loads to be Considered in Strength of Primary Supporting Structures

4.5.1 General

4.5.1.1 General

1 The loads to be considered in the requirements for strength assessments of primary supporting structures in **Chapter 7** are to be as specified in this **4.5**.

2 The loads in the maximum load condition are to be in accordance with **4.5.2**.

3 The loads in the harbour condition are to be in accordance with **4.5.3**.

4 The loads in the testing condition are to be in accordance with **4.5.4**.

5 The loads in the flooded condition are to be in accordance with **4.5.5**.

6 Where design loads exceeding the loads specified in **-2** to **-5** above are given, the said loads are to be considered additionally (e.g. where the pressure which may occur using ballast water management system or due to ballasting in ballast water exchange exceeds the load specified in each requirement).

4.5.2 Maximum Load Condition

4.5.2.1 Application

1 In the requirements for simple girders specified in **7.2**, the loads specified in **4.4.2** are to be considered. When considering the green sea pressure in **4.4.2.8** for deck girders/deck transverses, the value of coefficient a and the minimum value of P_{GW} are to be in accordance with **Table 4.5.2-1**.

2 In the requirements for double hull in **7.3**, the loads specified in **4.6.2** are to be considered. However, the internal pressure due to dry bulk cargoes, weight of hull structure, etc. are to be in accordance with the following **(1)** and **(2)**:

(1) The loads specified in **4.6.2.6-3** and **4.6.2.6-4** may not be considered for the internal pressure due to dry bulk cargoes specified in **4.6.2.6**. It is also acceptable to set $V_T = 0$ when loading high density cargo in **Table 4.6.2-17**.

(2) The weight of hull structure, etc. specified in **4.6.2.9** may not be considered.

3 The loads specified in **4.4.2** are to be considered in the requirements for pillars in **7.4**. Where the green sea pressure specified in **4.4.2.8** is applied, the values of the coefficient a and P_{GW_min} are to be in accordance with **Table 4.5.2-1**.

Table 4.5.2-1 Value of a and Minimum Value of P_{GW}

Line	Position of deck	a		P_{GW_min}	C
		Deck girder/deck transverse	Pillar		Deck girder/deck transverse and pillar
I	$x/L_C \geq 0.85$	7.35	4.90	$C\sqrt{L_{C230}+50}$	1.37
II	$0.7 \leq x/L_C < 0.85$	5.90	3.90		
III	$0.2 \leq x/L_C < 0.7$	2.25(1) 3.45(2)	2.25		1.18
IV	$x/L_C < 0.2$	4.90	3.25	$C\sqrt{L_{C230}}$	1.47
Second tier superstructure deck above freeboard deck(3)					0.69

Notes:
(1) For deck girders/deck transverses with attached the strength deck, excluding cross deck in the midship part.
(2) For deck girders/deck transverses other than **(1)** above.
(3) The values in line I through line IV are to be used for a on the second tier superstructure deck above freeboard deck.

4.5.3 Harbour Condition

4.5.3.1 External Pressure

1 The load due to hydrostatic pressure is to be considered as the external pressure acting on the hull.

2 External pressure P_{PT-ex} (kN/m^2) acting on the outer shell of the hull is to be in accordance with the following formula:

$$P_{PT-ex} = P_{exs}$$

P_{exs}: Hydrostatic pressure (kN/m^2), as specified in 4.4.2.3-1

4.5.3.2 Internal Pressure

1 Loads due to cargoes, ballast and other loaded materials are to be considered as the internal pressure acting on the hull.

2 Internal pressure P_{PT-in} (kN/m^2) acting on tanks loaded with liquids and ballast holds is to be in accordance with the following formulae:

For ballast tanks, $P_{PT-in} = P_{ls} + \rho_L g h_{air}$

For other tanks, $P_{PT-in} = P_{ls}$

P_{ls}: Static pressure (kN/m^2), as specified in 4.4.2.4-1

ρ_L: Density of liquid loaded (t/m^3), as specified in Table 4.4.2-6

h_{air}: Height of air pipe or overflow pipe above the top of the tank (m)

3 Internal pressure P_{PT-in} (kN/m^2) acting on cargo holds loaded with dry bulk cargoes in the fully loaded and partially loaded conditions is to be in accordance with the following formula:

$P_{PT-in} = P_{bs}$

P_{bs}: Static pressure (kN/m^2), as specified in 4.4.2.5-1

4 Internal pressure P_{xs} (kN/m^2) not corresponding to **-2** and **-3** above is to be the value calculated by dividing the weight of the loaded material (kN) by the area (m^2) in the range subject to said loaded material and is to be considered as a line load or a point load depending on the type of loaded material.

4.5.3.3 Vertical Bending Moment in Harbour Condition

1 The maximum vertical bending moment in harbour M_{PT_max} (kN-m) and the minimum vertical bending moment in harbour M_{PT_min} (kN-m) are to be considered for the vertical bending moments in the harbour condition.

2 M_{PT_max} is to be not less than 1.1 *times* the permissible maximum vertical still water bending moment during voyage M_{SV_max} specified in 4.3.2.2. M_{PT_min} is to be not greater than 1.1 *times* the permissible minimum vertical still water bending moment during voyage M_{SV_min} specified in 4.3.2.2.

3 Notwithstanding **-2** above, where the designer has determined the maximum vertical bending moment and the minimum vertical bending moment in the loading condition in harbour considering the cargo loading/unloading sequence, those values are to be considered. In this case, values of M_{PT_max} less than the value in **-2** above and M_{PT_min} greater than the value in **-2** above may be used. However, M_{PT_max} is not to be less than M_{SV_max} and M_{PT_min} is not to be greater than M_{SV_min}.

4.5.4 Testing Condition

4.5.4.1 General

The loads to be considered in the testing condition are to be in accordance with 4.4.3.

4.5.5 Flooded Condition

4.5.5.1 General

The loads to be considered in the flooded condition are to be in accordance with 4.4.4.

4.6 Loads to be Considered in Strength Assessment by Cargo Hold Analysis

4.6.1 General

4.6.1.1 General

1 The loads to be considered in the requirements for strength assessments by cargo hold analysis in Chapter 8 are to be as specified in this 4.6.

2 The loads in the maximum load condition are to be in accordance with 4.6.2.

3 The loads in the harbour condition are to be in accordance with 4.6.3.

4 The loads in the testing conditions are to be in accordance with 4.6.4.

5 The loads in the flooded condition are to be in accordance with 4.6.5.

6 Where design loads exceeding the loads specified in **-2** to **-5** above are given, the said loads are to be considered additionally (e.g. where the pressure which may occur using ballast water management system or due to ballasting in ballast water exchange exceeds the load specified in each requirement).

4.6.2 Maximum Load Condition

4.6.2.1 Loading Conditions

1 Among the planned standard loading conditions, the loading conditions of the following **(1)** to **(3)** are to be considered:

(1) Full load condition

(2) Ballast condition

(3) Other loading conditions deemed necessary by the Society

2 The values in each loading condition specified in the loading manual are to be used for the metacentric height GM (m), the height of the centre of gravity of the ship z_G (m), the draught amidships T_{LC} (m) and the radius of gyration K_{xx} (m) in the loading conditions under consideration. Where these values are not obtained beforehand, values obtained from **Table 4.6.2-1** corresponding to the loading condition may be used.

Table 4.6.2-1 Simplified Formulae for Parameters

Loading condition	Draught amidships T_{LC} (m)	Z coordinate at the centre of gravity of the ship z_G (m)	Metacentric height GM (m)	Radius of gyration K_{xx} (m)
Full load condition	T_{SC}	$0.25\frac{B}{C_B}$	$\frac{T_{SC}}{2}+\frac{B^2}{T_{SC}C_B}\frac{3C_W-1}{24}-z_G$	For ships other than ore carriers: $0.35B$ For ore carriers: $0.25B$
Ballast condition	T_{BAL}	$0.20\frac{B}{C_{B_LC}}$	$\frac{T_{LC}}{2}+\frac{B^2}{T_{LC}C_{B_LC}}\frac{3C_{W_LC}-1}{24}-z_G$	$0.40B$

4.6.2.2 Wave Conditions

1 The loads based on the equivalent design waves specified in **Table 4.6.2-2** are to be considered. The definitions of weather side down and weather side up are given in **Table 4.6.2-3.**

2 Consideration of an equivalent design waves other than the waves in **-1** above may be required where deemed necessary by the Society.

Table 4.6.2-2 Concept of Equivalent Design Wave

Equivalent design wave		Heading	Representative feature	
HM	*HM*-1	Head sea	Sagging (wave trough)	Vertical wave bending moment amidships reaches its minimum
	HM-2	Head sea	Hogging (wave crest)	Vertical wave bending moment amidships reaches its maximum
FM	*FM*-1	Following sea	Sagging (wave trough)	Vertical wave bending moment amidships reaches its minimum
	FM-2	Following sea	Hogging (wave crest)	Vertical wave bending moment amidships reaches its maximum
BR	*BR*-1*P*	Beam sea	Port side: weather side down	Roll angle reaches its minimum
	BR-2*P*	Beam sea	Port side: weather side up	Roll angle reaches its maximum
	BR-1*S*	Beam sea	Starboard side: weather side down	Roll angle reaches its maximum

	BR-2*S*	Beam sea	Starboard side: weather side up	Roll angle reaches its minimum
BP	*BP*-1*P*	Beam sea	Port side: weather side down	Hydrodynamic pressure at the waterline amidships of port side reaches its maximum
	BP-2*P*	Beam sea	Port side: weather side up	Hydrodynamic pressure at the waterline amidships of port side reaches its minimum
	BP-1*S*	Beam sea	Starboard side: weather side down	Hydrodynamic pressure at the waterline amidships of starboard side reaches its maximum
	BP-2*S*	Beam sea	Starboard side: weather side up	Hydrodynamic pressure at the waterline amidships of starboard side reaches its minimum

Table 4.6.2-3 Definitions of Weather Side Down and Weather Side Up

Port side: weather side down	Port side: weather side up	Starboard side: weather side down	Starboard side: weather side up
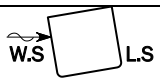	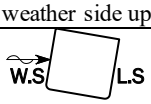		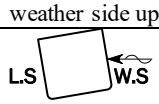

4.6.2.3 Lateral Loads

1 External pressure P_{ex} (kN/m^2) acting on the outer shell of the hull is to be in accordance with the following formula, but is not to be less than 0.

$P_{ex} = P_{exs} + P_{exw}$

P_{exs} : Hydrostatic pressure (kN/m^2), as specified in **Table 4.6.2-4**

P_{exw} : Hydrodynamic pressure (kN/m^2), as specified in **Table 4.6.2-4**

2 Internal pressure P_{in} (kN/m^2) acting on hulls, tanks, etc. due to loaded materials such as cargoes and ballast is to be in accordance with the following formula in each equivalent design wave, but is not to be less than 0.

$P_{in} = P_{ins} + P_{ind}$

P_{ins} : Static pressure (kN/m^2), as specified in **Table 4.6.2-4**

P_{ind} : Dynamic pressure (kN/m^2), as specified in **Table 4.6.2-4**

3 Notwithstanding **-2** above, container load F_c (kN) acting on cargo holds, hatch coamings, etc. where containers are stowed is to be in accordance with the following formula, but is not to be less than 0. The direction in which the container load acts is to be in accordance with the coordinate system in **1.4.3.6**.

$F_c = F_{cs} + F_{cd}$

F_{cs}: Static load of container cargo (kN), as specified in **Table 4.6.2-4**

F_{cd}: Dynamic load of container cargo (kN), as specified in **Table 4.6.2-4**

4 Notwithstanding **-2** and **-3** above, when a design load is given to a specified member, consideration of the load may be required.

Table 4.6.2-4 Lateral Loads

External pressure	Internal pressure P_{in}			Container load F_c
	Liquid loaded (e.g. liquid cargoes, ballast water)	Dry bulk cargo	Other than the left and container cargoes	Container cargoes
P_{exs} (**4.6.2.4-1**)	$P_{ins} = P_{ls}$ (**4.6.2.5-1**)	$P_{ins} = P_{bs}$ (**4.6.2.6-1**)	$P_{ins} = P_{xs}$ (**4.6.2.8**)	F_{cs} (**4.6.2.7-1**)
P_{exw} (**4.6.2.4-2**)	$P_{ind} = P_{ld}$ (**4.6.2.5-2**)	$P_{ind} = P_{bd}$ (**4.6.2.6-2**)	$P_{ind} = P_{xd}$ (**4.6.2.8**)	F_{cd} (**4.6.2.7-2**)
Notes: Numbers in parentheses ( ) indicate the sections of the referenced requirements.				

4.6.2.4 External Pressure due to Seawater

1 Hydrostatic pressure P_{exs} corresponding to the draught T_{LC} (m) in the loading condition under consideration is to be considered (*See* **Table 4.6.2-5**).

Table 4.6.2-5 Hydrostatic Pressure P_{exs}

Position under consideration	Hydrostatic pressure P_{exs} (kN/m^2)
$z \le T_{LC}$	$\rho g(T_{LC} - z)$
$z > T_{LC}$	0

2 Hydrodynamic pressure P_{exw} specified in the following **(1)** to **(4)** is to be considered.

(1) Hydrodynamic pressure in equivalent design wave *HM* is to be in accordance with **Table 4.6.2-6** (*See* **Fig. 4.6.2-1**).

(2) Hydrodynamic pressure in equivalent design wave *FM* is to be in accordance with **Table 4.6.2-7** (*See* **Fig. 4.6.2-2**).

(3) Hydrodynamic pressure in equivalent design wave *BR* is to be in accordance with **Table 4.6.2-8** (*See* **Figs. 4.6.2-3** and **4.6.2-4**).

(4) Hydrodynamic pressure in equivalent design wave *BP* is to be in accordance with **Table 4.6.2-9** (*See* **Figs. 4.6.2-5** and **4.6.2-6**).

Table 4.6.2-6 Hydrodynamic Pressure P_{exw} in Equivalent Design Wave *HM*

	Hydrodynamic pressure P_{exw} (kN/m^2)		
	$z \le T_{LC}$	$T_{LC} < z \le T_{LC} + h_W$	$z > T_{LC} + h_W$
HM-1	$P_{exw} = \max(-P_{HM}, \rho g(z - T_{LC}))$	$P_{WL} - \rho g(z - T_{LC})$	0
HM-2	$P_{exw} = \max(P_{HM}, \rho g(z - T_{LC}))$		

Notes:

P_{HM}: As given by the following formula:

$$P_{HM} = 0.5 C_{R_HM} C_{NL_HM} C_M C_{HM1} H_{S_HM} (P_{HM1} + P_{HM2} + P_{HM3} + P_{HM4})$$

C_{R_HM}: Coefficient considering the effect of ship operation, to be taken as 0.85

C_{NL_HM}: Coefficient considering nonlinear effects, to be taken as 0.9

C_M: Coefficient for maximum wave height, to be taken as 1.9

C_{HM1}: Correction coefficient for regular wave height, as given by the following formula:

$$C_{HM1} = 0.14 L_C^{0.28}$$

H_{S_HM}: Significant wave height (m), as given by the following formula but not to be less than 2.0

$$H_{S_HM} = -0.21 T_{Z_HM}^2 + 5.07 T_{Z_HM} - 15.7$$

T_{Z_HM}: Average zero up crossing wave period (s), as given by the following formula:

$$T_{Z_HM} = 0.71 \sqrt{\frac{2\pi\lambda_{HM}}{g}} + 2.5$$

λ_{HM}: Wavelength (m) in the equivalent design wave under consideration, as given by the following formula:

$$\lambda_{HM} = (0.91 + 0.24 f_T) L_C C_{W_LC}$$

P_{HM1}: As given by the following formula:

$$P_{HM1} = \rho g \cdot \exp\left(\frac{2\pi}{\lambda_{HM}}(z - T_{LC})\right) C_{HM2} \cdot \cos\left(\varepsilon_{HM} - (-2 - f_T)\frac{\pi}{3}\right)$$

C_{HM2}: Coefficient related to phase difference, as specified in **Table 4.6.2-10**

ε_{HM}: Phase of incident wave, as specified in **Table 4.6.2-10**

P_{HM2}: As given by the following formula:

$$P_{HM2} = \rho g |R_{3_HM}| (6.0 \cdot 10^{-4} \cdot L_C C_{W_LC} - 1.03)$$

R_{3_HM}: As given by the following formula:

$$R_{3_HM} = 116.4\left(\frac{T_{LC}}{L_C}\right)^{1.95}$$

P_{HM3}: As given by the following formula:

$$P_{HM3} = -\rho g\left|R_{5_HM}\right|(x - x_G)(-0.002\lambda_{HM} + 1.0)$$

R_{5_HM}: As given by the following formula:

$$R_{5_HM} = 2.08\pi\left(\frac{1}{L_C}\right)^{1.15}$$

x_G: X coordinate (m) at the centre of gravity of the ship, to be taken as $x_G = 0.45L_C$. The value calculated based on the weight distribution corresponding to the loading condition under consideration may be used.

P_{HM4}: As given by the following formulae:

For $x \geq x_G$,

$$P_{HM4} = \rho g\left\{-\left[1.48\left(\frac{GML}{T_{LC}}\right)^{-0.48} - 4.0\cdot 10^{-5}\cdot\left(\frac{GML}{T_{LC}}\right)^2 + 6.0\cdot 10^{-3}\cdot\left(\frac{GML}{T_{LC}}\right) - 0.11\right]\cos\left(\frac{10\pi}{3}\left(\frac{x - x_G}{L_C}\right)\right) + 1.48\left(\frac{GML}{T_{LC}}\right)^{-0.48} + 4.0\cdot 10^{-5}\cdot\left(\frac{GML}{T_{LC}}\right)^2 - 6.0\cdot 10^{-3}\cdot\left(\frac{GML}{T_{LC}}\right) + 0.11\right\}(1 - C_{yB})$$

For $x < x_G$,

$$P_{HM4} = \rho g\left[8.0\cdot 10^{-5}\cdot\left(\frac{GML}{T_{LC}}\right)^2 - 0.012\left(\frac{GML}{T_{LC}}\right) + 0.22\right](1 - C_{yB})$$

GML: Longitudinal metacentric height (m), as given by the following formula:

$$GML = \frac{\rho {L_C}^2 C_{W_LC}}{12(3 - 2C_{W_LC})T_{LC}C_{B_LC}}$$

C_{yB}: Ratio of the Y coordinate of the load calculation point or acceleration calculation point to B_{x1}, as given by the following formula but not to exceed 1.0. Where $B_{x1} = 0$, to be taken as $C_{yB} = 0$.

$$C_{yB} = \frac{|2y|}{B_{x1}}$$

B_{x1}: Moulded Breadth (m) at the waterline of the draught in the transverse section of the hull under consideration. Where the draught position is not in the section, to be taken as $B_{x1} = 0$.

P_{WL} : Hydrodynamic pressure (kN/m^2) at the waterline in the equivalent design wave considered, to be taken as:

For y ≥ 0, the value of P_{exw} at $y = B_{x1}/2$ and $z = T_{LC}$

For y < 0, the value of P_{exw} at $y = -B_{x1}/2$ and $z = T_{LC}$

h_W : Water head (m) equivalent to pressure at the waterline, as given by the following formula:

$$h_W = \frac{P_{WL}}{\rho g}$$

Fig. 4.6.2-1 Hydrodynamic Pressure in Equivalent Design Wave *HM*

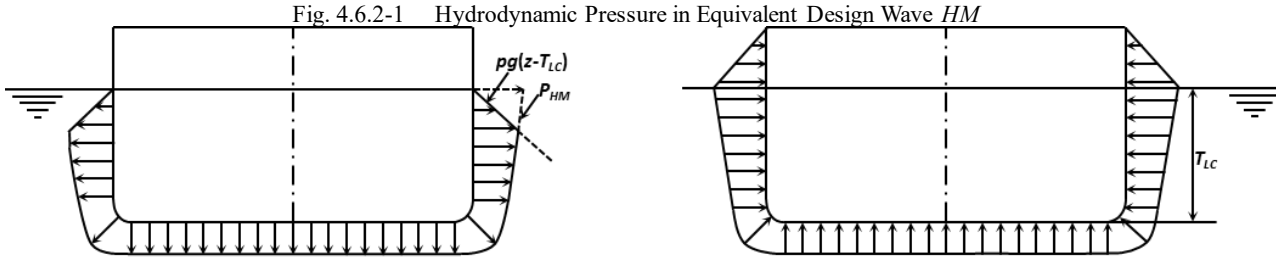

HM-1 *HM*-2

Table 4.6.2-7 Hydrodynamic Pressure P_{exw} in Equivalent Design Wave *FM*

	Hydrodynamic pressure P_{exw} (kN/m^2)		
	$z \le T_{LC}$	$T_{LC} < z \le T_{LC} + h_W$	$z > T_{LC} + h_W$
FM-1	$P_{exw} = \max\left(-P_{FM}, \rho g(z - T_{LC})\right)$	$P_{WL} - \rho g(z - T_{LC})$	0
FM-2	$P_{exw} = \max\left(P_{FM}, \rho g(z - T_{LC})\right)$		

Notes:

P_{WL}, h_W: As specified in **Table 4.6.2-6**

P_{FM}: As given by the following formula:

$$P_{FM} = 0.5 C_{R_FM} C_{NL_FM} C_M C_{FM1} H_{S_FM} (P_{FM1} + P_{FM2} + P_{FM3} + P_{FM4})$$

C_{R_FM}: Coefficient considering the effect of ship operation, to be taken as 0.85

C_{NL_FM}: Coefficient considering nonlinear effects, to be taken as 0.9

C_M: Coefficient for maximum wave height, to be taken as 1.9

C_{FM1}: Correction coefficient for regular wave height, to be taken as:

$$C_{FM1} = 0.22 {L_C}^{0.2}$$

H_{S_FM}: Significant wave height (m), as given by the following formula but not to be less than 2.0

$$H_{S_FM} = -0.21 {T_{Z_FM}}^2 + 5.07 T_{Z_FM} - 15.7$$

T_{Z_FM}: Average zero up crossing wave period (s), as given by the following formula:

$$T_{Z_FM} = 0.71 \sqrt{\frac{2\pi\lambda_{FM}}{g}} + 2.5$$

λ_{FM}: Wavelength (m) in the equivalent design wave under consideration, as given by the following formula:

$$\lambda_{FM} = (1.13 + 0.12 f_T) L_C C_{W_LC}$$

P_{FM1}: As given by the following formula:

$$P_{FM1} = \rho g \cdot \exp\left(\frac{2\pi}{\lambda_{FM}}(z - T_{LC})\right) \cdot C_{FM2} \cdot \cos\left(\varepsilon_{FM} - (-13 + 2 f_T)\frac{\pi}{12}\right)$$

C_{FM2}: Coefficient related to phase difference as specified in **Table 4.6.2-10**

ε_{FM}: Phase of incident wave as specified in **Table 4.6.2-10**

P_{FM2}: As given by the following formula:

$$P_{FM2} = \rho g \left|R_{3_FM}\right| \cdot (-1.0)$$

R_{3_FM}: As given by the following formula:

$$R_{3_FM} = 0.18$$

P_{FM3}: As given by the following formula:

$$P_{FM3} = -\rho g \left|R_{5_{FM}}\right| (x - x_G) \cdot [0.06(1 + f_T)]$$

R_{5_FM}: As given by the following formula:

$$R_{5_FM} = 0.44\pi \left(\frac{1}{L_C}\right)^{0.9}$$

x_G: As specified in **Table 4.6.2-6**

P_{FM4}: As given by the following formula:

$$P_{FM4} = \rho g \left[-0.29 \cos\left(2\pi\left(\frac{x - x_G}{L_C} + 0.1\right)\right)\right]\left(1 - \frac{C_{yB}}{2}\right)$$

C_{yB}: As specified in **Table 4.6.2-6**

Fig. 4.6.2-2 Hydrodynamic Pressure in Equivalent Design Wave *FM*

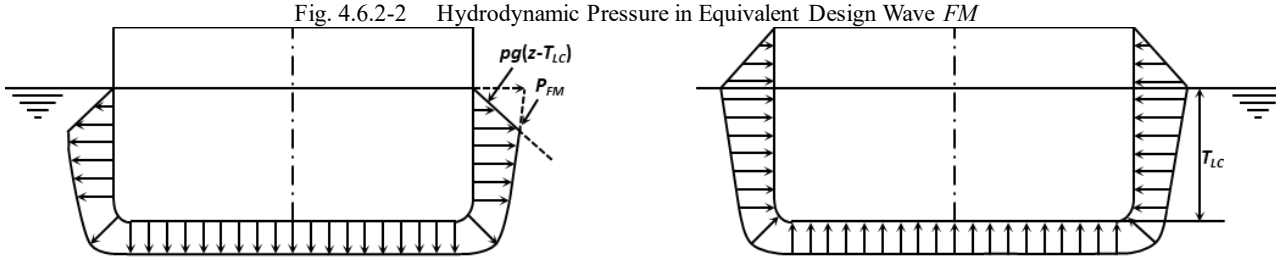

FM-1 *FM*-2

Table 4.6.2-8 Hydrodynamic Pressure P_{exw} in Equivalent Design Wave *BR*

	Hydrodynamic pressure P_{exw} (kN/m^2)		
	$z \le T_{LC}$	$T_{LC} < z \le T_{LC} + h_W$	$z > T_{LC} + h_W$
BR-1*P*	$P_{exw} = \max\left(P_{BR}, \rho g(z - T_{LC})\right)$	$P_{WL} - \rho g(z - T_{LC})$	0
BR-2*P*	$P_{exw} = \max\left(-P_{BR}, \rho g(z - T_{LC})\right)$		
BR-1*S*	$P_{exw} = \max\left(P_{BR}, \rho g(z - T_{LC})\right)$		
BR-2*S*	$P_{exw} = \max\left(-P_{BR}, \rho g(z - T_{LC})\right)$		

Notes:

P_{WL}, h_W: As specified in **Table 4.6.2-6**

P_{BR}: As given by to the following formula:

$$P_{BR} = 0.5 C_{R_BR} C_{NL_BR} C_M C_{BR1} H_{S_BR} (P_{BR1} + P_{BR2} + P_{BR3})$$

C_{R_BR}: Coefficient considering the effect of ship operation, to be taken as 0.85

C_{NL_BR}: Coefficient considering nonlinear effects, to be taken as 0.8

C_M: Coefficient for maximum wave height, to be taken as 1.9

C_{BR1}: Correction coefficient for regular wave height, to be taken as:

$$C_{BR1} = 4.0 C_{40}$$

C_{40}: As specified in **Table 4.2.2-1**

H_{S_BR}: Significant wave height (m), as given by the following formula but not to be less than 2.0

$$H_{S_BR} = -0.21 {T_{Z_BR}}^2 + 5.07 T_{Z_BR} - 15.7$$

T_{Z_BR}: Average zero up crossing wave period (s), as given by the following formula:

$$T_{Z_BR} = 0.71 \sqrt{\frac{2\pi\lambda_{BR}}{g}} + 1.5$$

λ_{BR}: Wavelength (m) in the equivalent design wave under consideration, as given by the following formula:

$$\lambda_{BR} = \frac{g {T_\theta}^2}{2\pi}$$

T_θ: As specified in **Table 4.2.2-1**

P_{BR1}: As given by the following formula:

$$P_{BR1} = \rho g \cdot \exp\left(\frac{2\pi}{\lambda_{BR}}(z - T_{LC})\right) C_{BR2} \cdot \cos \varepsilon_{BR}$$

C_{BR2}: Coefficient related to phase difference as specified in **Table 4.6.2-10**

ε_{BR}: Phase of incident wave as specified in **Table 4.6.2-10**

P_{BR2}: As given by the following formula:

$$P_{BR2} = \rho g \left|R_{3_BR}\right| (-2.0 \cdot 10^{-5} \cdot \lambda_{BR} z_G + 1.0)$$

R_{3_BR}: As given by the following formulae:

For $\lambda_{BR} \ge \lambda_3$,

$$R_{3_BR} = 173 \left(\frac{T_{LC}}{\lambda_{BR}}\right)^2 - 7.64 \frac{T_{LC}}{\lambda_{BR}} + 1.1$$

For $\lambda_{BR} < \lambda_3$,

$$R_{3_BR} = 1.29\frac{{\lambda_{BR}}^2}{2\pi\lambda_3 B{C_{B_LC}}^{0.12}{C_{W_LC}}^{0.55}}\exp\left(\frac{2\pi}{\lambda_3}T_{LC}C_{VP_LC}\right)$$

λ_3: As given by the following formula:

$$\lambda_3 = 2\pi B\left[0.011\left(\frac{B}{T_{LC}{C_{VP_LC}}^2}\right)^2 - 0.08\frac{B}{T_{LC}{C_{VP_LC}}^2} + 1.24\right]\left(\frac{9}{80}\pi\frac{2C_{W_LC}}{C_{W_LC}+1} + \frac{T_{LC}{C_{VP_LC}}^2}{B}\right)$$

z_G: Z coordinate (m) at the centre of gravity of the ship, as specified in **Table 4.2.2-1**

P_{BR3}: As given by the following formulae:

For equivalent design waves *BR*-1*P* and *BR*-2*P*, $P_{BR3} = \rho g|R_4|y$

For equivalent design wave *BR*-1*S* and *BR*-2*S*, $P_{BR3} = \rho g|R_4|(-y)$

R_4: As specified in **Table 4.2.2-1**

Fig. 4.6.2-3 Hydrodynamic Pressure Distribution Amidships in Equivalent Design Wave *BR*

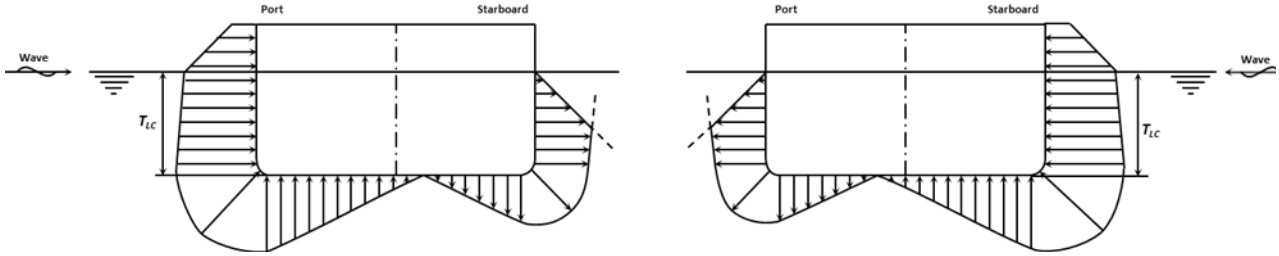

BR-1*P* *BR*-1*S*

Fig. 4.6.2-4 Hydrodynamic Pressure Distribution Amidships in Equivalent Design Wave *BR*

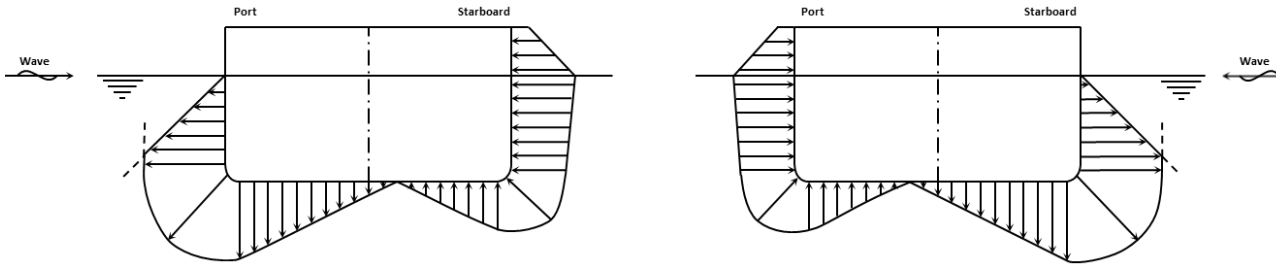

BR-2*P* *BR*-2*S*

Table 4.6.2-9 Hydrodynamic Pressure P_{exw} in Equivalent Design Wave *BP*

	Hydrodynamic pressure P_{exw} (kN/m^2)		
	$z \le T_{LC}$	$T_{LC} < z \le T_{LC} + h_W$	$z > T_{LC} + h_W$
BP-1*P*	$P_{exw} = \max(P_{BP}, \rho g(z - T_{LC}))$	$P_{WL} - \rho g(z - T_{LC})$	0
BP-2*P*	$P_{exw} = \max(-P_{BP}, \rho g(z - T_{LC}))$		
BP-1*S*	$P_{exw} = \max(P_{BP}, \rho g(z - T_{LC}))$		
BP-2*S*	$P_{exw} = \max(-P_{BP}, \rho g(z - T_{LC}))$		

Notes:

P_{WL}, h_W: As specified in **Table 4.6.2-6**

P_{BP} : As given by the following formula:

$$P_{BP} = 0.5C_{R_BP}C_{NL_BP}C_M C_{BP1}H_{S_BP}C_{PD}(P_{BP1} + P_{BP2} + P_{BP3} + P_{BP4} + P_{BP5})$$

C_{R_BP}: Coefficient considering the effect of ship operation, to be taken as 0.85

C_{NL_BP}: Coefficient considering nonlinear effects, to be taken as 0.9

C_M: Coefficient for maximum wave height, to be taken as 1.9

C_{BP1}: Correction coefficient for regular wave height, to be taken as:

$$C_{BP1} = -0.0003 f_T (BC_{W_LC})^2 + 0.024BC_{W_LC} + 0.1$$

H_{S_BP}: Significant wave height (m), as given by the formula but not to be less than 2.0

$$H_{S_BP} = -0.21{T_{Z_BP}}^2 + 5.07T_{Z_BP} - 15.7$$

T_{Z_BP}: Average zero up crossing wave period (s), as given by the following formula:

$$T_{Z_BP} = 0.71\sqrt{\frac{2\pi\lambda_{BP}}{g}}$$

λ_{BP}: Wavelength (m) in the equivalent design wave under consideration, as given by the following formula:

$$\lambda_{BP} = (23.5 - 11.0f_T)T_{LC}C_{B_LC}$$

C_{PD}: Coefficient considering distribution along the ship length, as given by the following formulae:

For $x/L_C \le 0.3$,

For equivalent design waves *BP*-1*P* and *BP*-2*P*

$$C_{PD} = \frac{10}{3}\left\{1 - \left[-\frac{10(1-f_T)C_{yB}}{1.7 + 1.8\frac{z}{T_{LC}}}\left(\frac{B}{\lambda_{BP}}\right)^2 + 0.15 + \left(0.8 + 0.3\frac{z}{T_{LC}}\right)(1-f_T) - 0.15\mathrm{sgn}(-y)\right]\right\}\frac{x}{L_C} + \left[-\frac{10(1-f_T)C_{yB}}{1.7 + 1.8\frac{z}{T_{LC}}}\left(\frac{B}{\lambda_{BP}}\right)^2 + 0.15 + \left(0.8 + 0.3\frac{z}{T_{LC}}\right)(1-f_T) - 0.15\mathrm{sgn}(-y)\right]$$

For equivalent design waves *BP*-1*S* and *BP*-2*S*

$$C_{PD} = \frac{10}{3}\left\{1 - \left[-\frac{10(1-f_T)C_{yB}}{1.7 + 1.8\frac{z}{T_{LC}}}\left(\frac{B}{\lambda_{BP}}\right)^2 + 0.15 + \left(0.8 + 0.3\frac{z}{T_{LC}}\right)(1-f_T) - 0.15\mathrm{sgn}(y)\right]\right\}\frac{x}{L_C} + \left[-\frac{10(1-f_T)C_{yB}}{1.7 + 1.8\frac{z}{T_{LC}}}\left(\frac{B}{\lambda_{BP}}\right)^2 + 0.15 + \left(0.8 + 0.3\frac{z}{T_{LC}}\right)(1-f_T) - 0.15\mathrm{sgn}(y)\right]$$

For $0.3 < x/L_C \le 0.6$,

$$C_{PD} = 1.0$$

For $0.6 < x/L_C$,

$$C_{PD} = \frac{5}{2}\left\{-\left(6 - 2\frac{z}{T_{LC}}\right)C_{yB}\left(\frac{B}{\lambda_{BP}}\right)^2 + \frac{1}{2}\left(1 - \frac{z}{T_{LC}}\right)\right\}\frac{x}{L_C} - \frac{3}{2}\left\{-\left(6 - 2\frac{z}{T_{LC}}\right)C_{yB}\left(\frac{B}{\lambda_{BP}}\right)^2 + \frac{3}{2} - \frac{1}{2}\frac{z}{T_{LC}}\right\} + \frac{5}{2}$$

C_{yB}: As specified in **Table 4.6.2-6**

P_{BP1}: As given by the following formula:

$$P_{BP1} = \rho g \cdot \exp\left(\frac{2\pi}{\lambda_{BP}}(z - T_{LC})\right)C_{BP2} \cdot \cos\left(\varepsilon_{BP} - \left(-27\frac{T_{LC}}{B} - 4\right)\frac{\pi}{36}\right)$$

C_{BP2}: Coefficient related to phase difference as specified in **Table 4.6.2-10**

ε_{BP}: Phase of incident wave as specified in **Table 4.6.2-10**

P_{BP2}: As given by the following formula:

$$P_{BP2} = P_{BP6}P_{BP7}$$

P_{BP6}: As given by the following formulae:

For equivalent design waves *BP*-1*P* and *BP*-2*P*,

$$P_{BP6} = \rho g \cdot \exp\left(\frac{2\pi}{\lambda_{BP}}(z - T_{LC})\right)\left[(0.75C_{B_LC} - 0.3)\frac{2yB_{x1}}{B^2}\frac{z}{T_{Lc}} + 1.0\right]$$

For equivalent design waves *BP*-1*S* and *BP*-2*S*,

$$P_{BP6} = \rho g \cdot \exp\left(\frac{2\pi}{\lambda_{BP}}(z - T_{LC})\right)\left[(-0.75C_{B_LC} + 0.3)\frac{2yB_{x1}}{B^2}\frac{z}{T_{Lc}} + 1.0\right]$$

P_{BP7}: As given by the following formulae:

For equivalent design waves *BP*-1*P* and *BP*-2*P*,

$$\text{For } y \ge 0, P_{BP7} = \left(-0.9 + 1.9\frac{z}{T_{LC}} - 3.5\frac{|2y|}{B}\right)\left[\frac{B}{\lambda_{BP}} - \left(0.65 + 0.11\frac{z}{T_{LC}} - 0.16\frac{|2y|}{B}\right)\right]^2 + 1.0$$

$$\text{For } y < 0, P_{BP7} = \left(-0.9 - 4.3\frac{z}{T_{LC}} - 3.5\frac{|2y|}{B}\right)\left[\frac{B}{\lambda_{BP}} - \left(0.65 + 0.02\frac{z}{T_{LC}} - 0.37\frac{|2y|}{B}\right)\right]^2 + 1.0$$

For equivalent design waves *BP*-1*S* and *BP*-2*S*,

For $y \geq 0, P_{BP7} = \left(-0.9 - 4.3\frac{z}{T_{LC}} - 3.5\frac{|2y|}{B}\right)\left[\frac{B}{\lambda_{BP}} - \left(0.65 + 0.02\frac{z}{T_{LC}} - 0.37\frac{|2y|}{B}\right)\right]^2 + 1.0$

For $y < 0, P_{BP7} = \left(-0.9 + 1.9\frac{z}{T_{LC}} - 3.5\frac{|2y|}{B}\right)\left[\frac{B}{\lambda_{BP}} - \left(0.65 + 0.11\frac{z}{T_{LC}} - 0.16\frac{|2y|}{B}\right)\right]^2 + 1.0$

P_{BP3}: As given by the following formula:

$$P_{BP3} = \rho g \frac{2\pi g}{\lambda_{BP}}|R_{2_BP}|\left(0.143\frac{z}{T_{LC}} + 0.082\frac{|2y|}{B}\right)T_{LC}C_{B_LC}P_{BP8}$$

R_{2_BP}: To be taken as:

$$R_{2_BP} = 0.17\frac{\lambda_{BP}}{B}$$

P_{BP8}: As given by the following formulae:

For equivalent design waves *BP*-1*P* and *BP*-2*P*,

$$P_{BP8} = \cos\left(\frac{11}{18}\pi\left[0.66 + (-0.17\mathrm{sgn}(-y) + 0.01)\frac{z}{T_{LC}} + 0.16\frac{|2y|}{B}\right]C_{B_LC}{}^{0.4\left[-\mathrm{sgn}(-y)\frac{z}{T_{LC}} - \left(1 - \frac{|2y|}{B}\right)\right]}\right)$$

For equivalent design waves *BP*-1*S* and *BP*-2*S*,

$$P_{BP8} = \cos\left(\frac{11}{18}\pi\left[0.66 + (-0.17\mathrm{sgn}(y) + 0.01)\frac{z}{T_{LC}} + 0.16\frac{|2y|}{B}\right]C_{B_LC}{}^{0.4\left[-\mathrm{sgn}(y)\frac{z}{T_{LC}} - \left(1 - \frac{|2y|}{B}\right)\right]}\right)$$

P_{BP4}: As given by the following formula:

$$P_{BP4} = P_{BP9}P_{BP10}$$

P_{BP9}: As given by the following formula:

$$P_{BP9} = \rho g \frac{2\pi g}{\lambda_{BP}}|R_{3_BP}|\left[\left(0.052 + 0.016\frac{z}{T_{LC}} - 0.024\frac{|2y|}{B}\right)BC_{VP_LC} + 0.03 - 0.1\frac{|2y|}{B}\right]$$

R_{3_BP}: As given by the following formula:

$$R_{3_BP} = 0.33\left(\frac{\lambda_{BP}}{B}\right)^{1.07}$$

P_{BP10}: As given by the following formula:

$$P_{BP10} = \cos\left(3.17\pi\left(-1.21\frac{z}{T_{LC}} + 0.21\frac{|2y|}{B}\right)\frac{C_{W_LC}{}^2T_{LC}}{\lambda_{BP}} + 0.97\pi\left(1 - 0.11\frac{z}{T_{LC}} - 0.26\frac{|2y|}{B}\right)\right)$$

P_{BP5}: As given by the following formula:

$$P_{BP5} = \rho g|R_{3_BP}|$$

Fig. 4.6.2-5 Hydrodynamic Pressure Distribution Amidships in Equivalent Design Wave *BP*

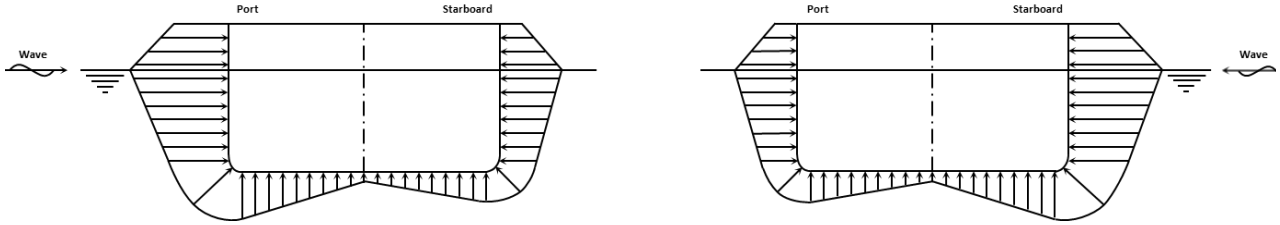

BP-1*P* *BP*-1*S*

Fig. 4.6.2-6 Hydrodynamic Pressure Distribution Amidships in Equivalent Design Wave *BP*

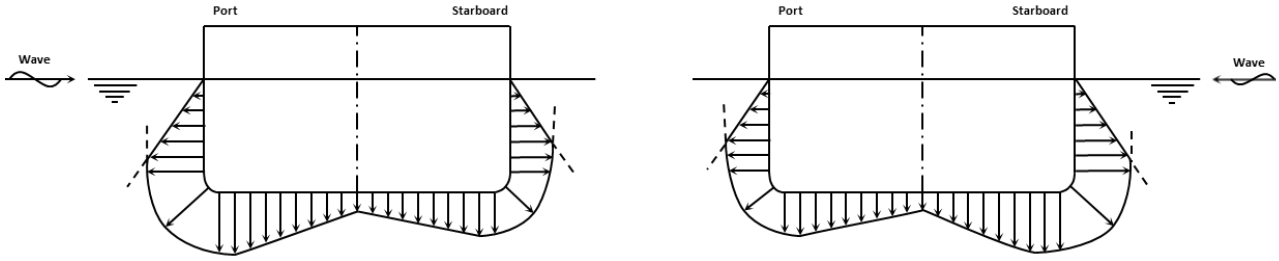

BP-2P *BP-2S*

Table 4.6.2-10 Phase of Incident Wave in Equivalent Design Wave

	$C_{RE} > 0$	$C_{RE} < 0$	$C_{RE} = 0$ and $C_{IM} \geq 0$	$C_{RE} = 0$ and $C_{IM} < 0$
$C_{HM2}, C_{FM2}, C_{BR2}, C_{BP2}$	1	-1	1	-1
$\varepsilon_{HM}, \varepsilon_{FM}, \varepsilon_{BR}, \varepsilon_{BP}$	$\arctan\left(\frac{C_{IM}}{C_{RE}}\right)$		$\frac{\pi}{2}$	

Notes:

C_{RE}: As given by the following formulae:

For equivalent design wave *HM*, $C_{RE} = \cos\left(\pi + \frac{2\pi}{\lambda_{HM}}(x - x_G)\right)$

For equivalent design wave *FM*, $C_{RE} = \cos\left(\pi - \frac{2\pi}{\lambda_{FM}}(x - x_G)\right)$

For equivalent design waves *BR*-1*P* and *BR*-2*P*, $C_{RE} = \cos\left(\pi + \frac{2\pi}{\lambda_{BR}}y\right)$

For equivalent design waves *BR*-1*S* and *BR*-2*S*, $C_{RE} = \cos\left(\pi - \frac{2\pi}{\lambda_{BR}}y\right)$

For equivalent design waves *BP*-1*P* and *BP*-2*P*, $C_{RE} = \cos\left(\pi + \frac{2\pi}{\lambda_{BP}}y\right)$

For equivalent design waves *BP*-1*S* and *BP*-2*S*, $C_{RE} = \cos\left(\pi - \frac{2\pi}{\lambda_{BP}}y\right)$

λ_{HM}: As specified in **Table 4.6.2-6**

λ_{FM}: As specified in **Table 4.6.2-7**

λ_{BR}: As specified in **Table 4.6.2-8**

λ_{BP}: As specified in **Table 4.6.2-9**

x_G: As specified in **Table 4.6.2-6**

C_{IM}: As given by the following formulae:

For equivalent design wave *HM*, $C_{IM} = \sin\left(-\frac{2\pi}{\lambda_{HM}}(x - x_G)\right)$

For equivalent design wave *FM*, $C_{IM} = \sin\left(\frac{2\pi}{\lambda_{FM}}(x - x_G)\right)$

For equivalent design waves *BR*-1*P* and *BR*-2*P*, $C_{IM} = \sin\left(-\frac{2\pi}{\lambda_{BR}}y\right)$

For equivalent design waves *BR*-1*S* and *BR*-2*S*, $C_{IM} = \sin\left(\frac{2\pi}{\lambda_{BR}}y\right)$

For equivalent design waves *BP*-1*P* and *BP*-2*P*, $C_{IM} = \sin\left(-\frac{2\pi}{\lambda_{BP}}y\right)$

For equivalent design waves *BP*-1*S* and *BP*-2*S*, $C_{IM} = \sin\left(\frac{2\pi}{\lambda_{BP}}y\right)$

4.6.2.5 Internal Pressure due to Liquid Loaded

1 Static pressure P_{ls} (kN/m^2) acting on tanks and ballast holds loaded with liquids is to be in accordance with **Table 4.6.2-11.**

Table 4.6.2-11 Static Pressure P_{ls} in Tanks and Ballast Holds Loaded with Liquid

Type of tank or hold	Static pressure P_{ls} (kN/m^2)	
	$z \leq z_{top}$	$z > z_{top}$
Cargo tanks fully loaded with liquid cargo (excluding liquefied gas)	$\rho_L g(z_{top} - z) + P_{PV}$	0
Cargo tanks fully loaded with liquefied gas and liquefied gas fuel tanks	$\rho_L g(z_{top} - z) + P_0$	0
Ballast holds	$\rho_L g(z_{top} - z)$	0
Ballast tanks and other tanks	$\rho_L g(z_{top} - z)$	0

Notes:

ρ_L: Density of liquid loaded (t/m^3), as specified in **Table 4.6.2-12**

z_{top}: Z coordinate of the highest point (m) of tank excluding small hatchways

P_{PV}: Design vapour pressure (kN/m^2), not to be less than 25 kN/m^2

P_0: Design vapour pressure (kN/m^2). For cargo tanks, this value is not to be less than the *MARVS* specified in **1.1.4, Part N**. For liquefied gas fuel tanks, this value is not to be less than *MARVS* specified in **2.2.1, Part GF**.

Table 4.6.2-12 Density ρ_L of Liquid Cargoes

Type of liquid cargo	Density ρ_L (t/m^3)
Ballast water	1.025
Crude oil and petroleum products(1)	0.9
Liquefied gas(1)	Design cargo density
Others(1) (2)	Value deemed appropriate by the Society

Notes:

(1) Where the maximum liquid cargo density in a cargo tank loaded at 98 % is greater than the value shown in the Table in any loading condition described in the loading manual, the said value is to be used.

(2) The following values may be used:
Concentrated sulphuric acid: 1.85
Molasses: 1.4
Asphalt: 1.1
Fresh water: 1.0
Heavy oil C: 0.95
Heavy oil A and lubricating oil: 0.9

2 Dynamic pressure P_{ld} (kN/m^2) acting on tanks and ballast holds loaded with liquid is to be as specified in **Table 4.6.2-13**.

Table 4.6.2-13 Dynamic Pressure P_{ld} Acting on Tanks and Ballast Holds Fully Loaded with Liquid

Type of cargo compartment	Dynamic pressure P_{ld} (kN/m^2)	
	$z \leq z_{top}$	$z > z_{top}$
Cargo tanks fully loaded with liquid cargo including liquefied gas, ballast holds and liquefied gas fuel tanks	$\rho_L[a_{X-TG}(x_{TG} - x) + a_{Y-TG}(y_{TG} - y) + a_{Z-TG}(z_0 - z)]$	0
Other than the above (e.g. ballast tanks)	$\rho_L[a_{X-TG}(x_0 - x) + a_{Y-TG}(y_0 - y) + a_{Z-TG}(z_0 - z)]$	0

Notes:

ρ_L: As specified in **Table 4.6.2-12**

$a_{X-TG}, a_{Y-TG}, a_{Z-TG}$: Acceleration at the volumetric centre of gravity of tank or ballast hold under consideration, as specified in **Table 4.6.2-14**

x_0, y_0, z_0: X, Y and Z coordinates of reference point (m)(1)

z_{top}: As specified in **Table 4.6.2-11**

(1) The reference point is to be taken as the point with the highest value of V_j, calculated for all points that define the upper boundary of the tank or the ballast hold excluding the points located at the height equal to or below the volumetric centre of gravity of the said tank and hold.

$V_j = a_{X-TG}(x_j - x_{TG}) + a_{Y-TG}(y_j - y_{TG}) + (a_{Z-TG} + g)(z_j - z_{TG})$

x_j, y_j, z_j: X, Y and Z coordinates of point j (m) on the upper boundary of the tank or the ballast hold excluding the points located at the height equal to or below the volumetric centre of gravity of the said tank and hold

x_{TG}, y_{TG}, z_{TG}: X, Y and Z coordinates (m) at the volumetric centre of gravity of the tank or ballast hold under consideration

Table 4.6.2-14 Acceleration a_X, a_Y and a_Z at Any Position

Equivalent design wave		Longitudinal acceleration a_X (m/s^2)	Transverse acceleration a_Y (m/s^2)	Vertical acceleration a_Z (m/s^2)
HM	*HM*-1	$-0.6g \cdot \sin\phi$ $+(-0.2f_T + 0.3)a_1$ $-0.7a_5(z - z_G)$	0	$(-0.15 + 0.5f_T)a_3$ $+0.7a_5(x - x_G)$
	HM-2	$0.6g \cdot \sin\phi$ $+(0.2f_T - 0.3)a_1$ $+0.7a_5(z - z_G)$	0	$(0.15 - 0.5f_T)a_3$ $-0.7a_5(x - x_G)$
FM	*FM*-1	$0.1g \cdot \sin\phi$ $+(-0.4f_T + 0.2)a_1$ $+(0.02T_{LC} - 0.14)a_5(z - z_G)$	0	$0.075a_3$ $-(0.02T_{LC} - 0.14)a_5(x - x_G)$
	FM-2	$-0.1g \cdot \sin\phi$ $+(0.4f_T - 0.2)a_1$ $+(-0.02T_{LC} + 0.14)a_5(z - z_G)$	0	$-0.075a_3$ $-(-0.02T_{LC} + 0.14)a_5(x - x_G)$
BR	*BR*-1*P*	0	$-g \cdot \sin\theta$ $+(-0.2f_T + 0.2)a_2$ $-a_4(z - z_G)$	$g(\cos\theta - 1)$ $+(0.7 - 0.4f_T)a_3 + a_4 y$
	BR-2*P*	0	$g \cdot \sin\theta$ $+(0.2f_T - 0.2)a_2$ $+a_4(z - z_G)$	$g(\cos\theta - 1)$ $+(-0.7 + 0.4f_T)a_3 - a_4 y$
	BR-1*S*	0	$g \cdot \sin\theta$ $+(0.2f_T - 0.2)a_2$ $+a_4(z - z_G)$	$g(\cos\theta - 1)$ $+(0.7 - 0.4f_T)a_3 - a_4 y$
	BR-2*S*	0	$-g \cdot \sin\theta$ $+(-0.2f_T + 0.2)a_2$ $-a_4(z - z_G)$	$g(\cos\theta - 1)$ $+(-0.7 + 0.4f_T)a_3 + a_4 y$
BP	*BP*-1*P*	0	$-0.002\lambda_{BP}g \cdot \sin\theta$ $-0.3a_2 - 0.3a_4(z - z_G)$	$[1 - 1.6\exp(-0.012\lambda_{BP})]a_3$ $+0.3a_4 y$
	BP-2*P*	0	$0.002\lambda_{BP}g \cdot \sin\theta$ $+0.3a_2 + 0.3a_4(z - z_G)$	$[-1 + 1.6\exp(-0.012\lambda_{BP})]a_3$ $-0.3a_4 y$
	BP-1*S*	0	$0.002\lambda_{BP}g \cdot \sin\theta$ $+0.3a_2 + 0.3a_4(z - z_G)$	$[1 - 1.6\exp(-0.012\lambda_{BP})]a_3$ $-0.3a_4 y$
	BP-2*S*	0	$-0.002\lambda_{BP}g \cdot \sin\theta$ $-0.3a_2 - 0.3a_4(z - z_G)$	$[-1 + 1.6\exp(-0.012\lambda_{BP})]a_3$ $+0.3a_4 y$

Notes:

a_1, a_2, a_3, a_4, a_5: As specified in **4.2.3**

θ, ϕ: As specified in **4.2.2**

x_G: X coordinate (m) at the centre of gravity of the ship to be taken as $x_G = 0.45L_C$. However, the value calculated based on the weight distribution corresponding to the considered loading condition may be used.

z_G: Z coordinate (m) at the centre of gravity of the ship in the loading condition under consideration

λ_{BP}: As specified in **Table 4.6.2-9**

4.6.2.6 Internal Pressure due to Dry Bulk Cargo

1 Static pressure P_{bs} (kN/m^2) acting on cargo holds loaded with dry bulk cargo is to be in accordance with **Table 4.6.2-15**.

Table 4.6.2-15 Static Pressure P_{bs} in Cargo Holds Loaded with Dry Bulk Cargo

Position under consideration	Static pressure P_{bs} (kN/m^2)(1)
$z \le z_C$	$\rho_C K_C g(z_C - z)$
$z > z_C$	0

Notes:

ρ_C: Density of dry bulk cargo (t/m^3), as specified in **Table 4.6.2-16**(2)

K_C: Coefficient of the earth pressure, as given by the following formulae:

For inner bottom plating, hopper tanks, transverse bulkheads, longitudinal bulkheads, lower stools, vertical upper stools and side shells,

$$K_C = \cos^2\alpha + (1 - \sin\psi)\sin^2\alpha$$

For top side tanks, main decks and sloped upper stools,

$$K_C = 0$$

α: Inclination angle (*rad*) to the horizontal plane of the panel under consideration, but where α exceeds $\pi/2$, α is to be $\pi/2$.

ψ: Angle of repose of dry bulk cargo (*rad*), as given by the following formulae:

For iron ore and coal, $\psi = 0.611$ (i.e. 35 *deg*)

For cement, $\psi = 0.436$ (i.e. 25 *deg*)

For others, $\psi = 0.524$ (i.e. 30 *deg*)

z_C : Height (m) from the baseline to the top surface of the cargo in way of the point on which the load is act, as given by the following **(1)** and **(2)**. The value of z_C is to be taken as constant in the longitudinal direction of the cargo hold under consideration.

(1) Where cargo is loaded up to the top of the hatch coaming

$$z_C = z_{DB} + h_{C_CL}$$

z_{DB}: Height (m) from the baseline to the inner bottom plating at the centreline, measured at the mid-length of the cargo hold under consideration

h_{C_CL}: Height (m) from the inner bottom plating to the upper surface of dry bulk cargo at the centreline, measured at the mid-length in the longitudinal direction of the cargo hold under consideration (*See* **Fig. 4.6.2-7**) as given by the following formula:

$$h_{C_CL} = \frac{1}{B_H}\left(S_C + \frac{V_{HC}}{\ell_H}\right)$$

S_C: Area (m^2) from the bottom plating of the cargo hold to the lower end of the hatch side coaming, measured at the mid-length in the longitudinal direction of the cargo hold under consideration (*See* **Fig. 4.6.2-7**)

V_{HC}: Volume of the hatch coaming of the cargo hold under consideration (m^3) from the lower end to the top of the hatch coaming (*See* **Fig. 4.6.2-8**)

ℓ_H: Length of the cargo hold (m) at the centreline between the transverse bulkheads (*See* **Fig. 4.6.2-8**). As for cargo hold with corrugated bulkheads, ℓ_H is to be the distance between the mid-depth of the corrugated bulkheads.

B_H: Breadth of the cargo hold (m) at the mid-height between the lower end of the hatch coaming and the bottom plating of the cargo hold under consideration, determined at the mid-length in the longitudinal direction of the said cargo hold (*See* **Fig. 4.6.2-7**)

(2) For cases other than **(1)** above (e.g. where high density cargo is loaded)

$$z_C = z_{DB} + h_C$$

h_C: Height (m) from the inner bottom plating at the centreline to the upper surface of the dry bulk cargo, measured at the mid-length in the longitudinal direction of the cargo hold under consideration (*See* **Fig. 4.6.2-7**), to be obtained so that the value of the cargo volume divided by ℓ_H is equivalent to the area(3) of the cargo at the mid-

length in the longitudinal direction of the said cargo hold. The cargo volume is to be as specified in **Table 4.6.2-16.**
(1) Where the upper surface of the cargo is at the position of the hatch coaming, the loads acting on the said member may not be considered. (2) Both low density cargoes and high density cargoes are to be considered where deemed necessary by the Society. (3) The upper surface of the cargo is to be horizontal in the longitudinal and transverse directions in the range of $1/2$ of B_H on each side of the centreline, and is to be sloped at each side linearly from the edge of the horizontal plane towards the ship side, with the angle equal to half of the angle of repose.

Table 4.6.2-16 Dry Bulk Cargo Mass and Density

	Homogeneous loading condition and others		Alternate loading condition	
	Cargo loaded up to the top of hatch coaming	Other than the left (e.g. high density cargo loaded, etc.)	Cargo loaded up to the top of hatch coaming	Other than the left (e.g. high density cargo loaded, etc.)
Dry bulk cargo mass M (t)	M_{Full}	M_H	M_{HD}	M_{HD}
Cargo density ρ_C (t/m^3)	$\frac{M_{Full}}{V_{Full}}$	3.0(1)	$\frac{M_{HD}}{V_{Full}}$	3.0(1)

Notes:

M_{Full}: Cargo mass (t) when loaded to the top of the hatch coaming

M_H: Cargo mass (t) to be loaded in the cargo hold under consideration in the homogeneous loading condition with scantling draught (all ballast tanks empty)

M_{HD}: Designed maximum cargo mass (t) to be loaded in the cargo hold under consideration with the scantling draught

V_{Full}: Volume of the cargo hold (m^3) including the volume of the hatch coaming

(1) To be taken as 3.0 unless the designed maximum cargo density is specified in the loading manual.

Fig. 4.6.2-7 Cargo Hold Loaded with Dry Bulk Cargo

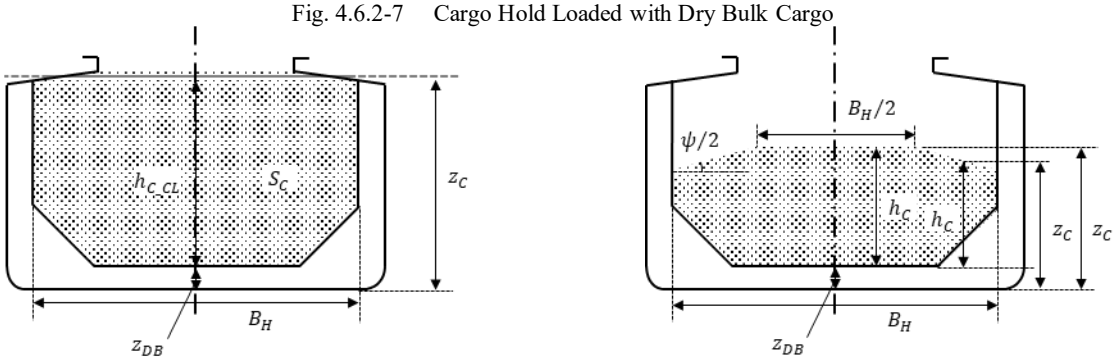

When cargo is loaded to the top of hatch coaming

Other than the left figure (high density cargo loaded, etc.)

Fig. 4.6.2-8 Cargo Hold Loaded with Dry Bulk Cargo

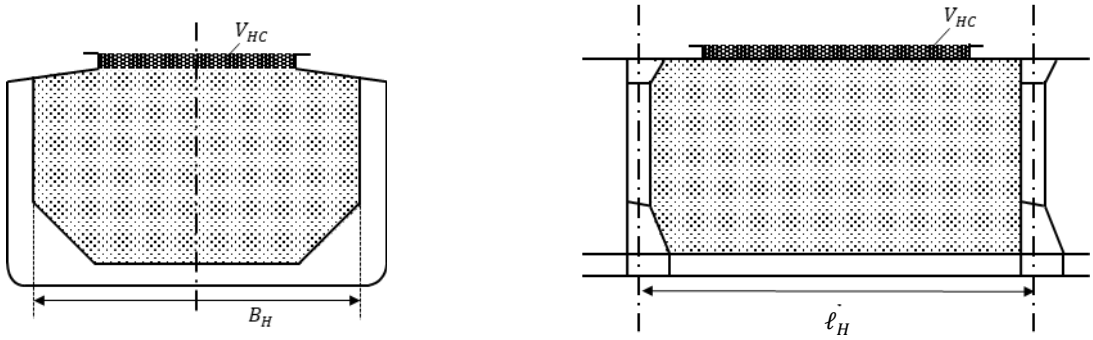

Transverse section Longitudinal section

2 Dynamic pressure P_{bd} (kN/m^2) acting on cargo holds loaded with dry bulk cargo is to be in accordance with **Table 4.6.2-17**.

Table 4.6.2-17 Dynamic Pressure P_{bd} Acting on Cargo Holds Loaded with Dry Bulk Cargo

Position under consideration	Dynamic pressure P_{bd} (kN/m^2)(1)
$z \le z_C$	$\rho_C \left[C_{bx} a_{X-HG}(x_{HG} - x) + \frac{V_C}{V_C - V_T} C_{by} a_{Y-HG}(y_{HG} - y) + C_{bz} K_C a_{Z-HG}(z_C - z) \right]$
$z > z_C$	0

Notes:

ρ_C: As specified in **Table 4.6.2-16**

K_C, z_C: As specified in **Table 4.6.2-15**

C_{bx}: Coefficient considering the effect of friction between particles of granular cargoes, etc. to be taken as 0.34

C_{by}: Coefficient considering the effect of friction between particles of granular cargoes, etc. to be taken as 0.34

C_{bz}: Coefficient considering the effect of friction between particles of granular cargoes, etc. to be taken as 1.00.

$a_{X-HG}, a_{Y-HG}, a_{Z-HG}$: Acceleration ($m/s^2$) in the longitudinal, transverse and vertical directions at the volumetric centre of gravity of the cargo hold under consideration, calculated in accordance with **Table 4.6.2-14**(2)

x_{HG}, y_{HG}: X, Y coordinates (m) at the volumetric centre of gravity of the cargo hold under consideration

V_C: When cargo is loaded up to the top of the hatch coaming, to be taken as $V_C = V_{Full}$. For other cases, to be taken as $V_C = M/3.0$

V_{Full}, M: As specified in **Table 4.6.2-16**

V_T: Volume of cargo (m^3) above the horizontal plane including the upper surface of the cargo at the position of the side shell (longitudinal bulkhead for double hull construction) for high density cargoes (*See* **Fig. 4.6.2-9**). However, where cargo is loaded to the top of the hatch coaming, to be taken as 0.

(1) Where the upper surface of the cargo is at the position of the hatch coaming, the loads acting on the said member may not be considered.
(2) The Z coordinate (m) at the volumetric centre of gravity is to be taken as:
  (a) When cargo is loaded to the top of the hatch coaming, to be taken as $z_{DB} + h_{C_CL}/2$.
  (b) In other cases, to be taken as $z_{DB} + h_C/2$. h_C is to be taken as the value at the centreline.

3 Where the height of the point on which the load is act z is equal to or less than z_C, the following shear loads **(1)** and **(2)** are to be considered for inner bottom plating and sloping plate in contact with the dry bulk cargo, in addition to the internal pressure acting on the cargo hold loaded with the dry bulk cargo in **-1** and **-2** above:

(1) Static shear load P_{bs-z} (kN/m^2) as specified in **Table 4.6.2-18**

(2) Dynamic shear loads P_{bd-x}, P_{bd-y} and P_{bd-z} (kN/m^2) as specified in **Table 4.6.2-19**

Table 4.6.2-18 Static Shear Load P_{bs-z} of Dry Bulk Cargo

Member on which load acts and direction of load	Static shear load P_{bs-z} (kN/m^2) of dry bulk cargo
Parallel to bilge hopper plating and lower stool sloping plate(1)	$P_{bs-z} = \rho_C g(z_C - z)\dfrac{1-K_C}{\tan\alpha}$
Notes: ρ_C: As specified in **Table 4.6.2-16** K_C, z_C, α: As specified in **Table 4.6.2-15**	
(1) Defined as positive when the load acts downward on the plating.	

Table 4.6.2-19 Dynamic Shear Loads P_{bd-x}, P_{bd-y} and P_{bd-z} of Dry Bulk Cargo

Member on which load acts and direction of load	Dynamic shear load (kN/m^2) of dry bulk cargo
Longitudinal direction of inner bottom plating(1)	$P_{bd-x} = -(1-C_{bx})\rho_C a_{X-HG}\dfrac{V_C}{B_{IB}l_{IB}}$
Transverse direction of inner bottom plating(2)	$P_{bd-y} = -(1-C_{by})\rho_C a_{Y-HG}\dfrac{V_C}{B_{IB}l_{IB}}$
Parallel to bilge hopper plating and lower stool sloping plate(3)	$P_{bd-z} = \rho_C a_{Z-HG}(z_C - z)\dfrac{1-K_C}{\tan\alpha}$
Notes: ρ_C : As specified in **Table 4.6.2-16** C_{bx}, C_{by}: As specified in **Table 4.6.2-17** V_C: As specified in **Table 4.6.2-17** K_C, z_C, α: As specified in **Table 4.6.2-15** $a_{X-HG}, a_{Y-HG}, a_{Z-HG}$: As given in **Table 4.6.2-17** B_{IB}: Breadth of inner bottom plating (m) measured at the mid-length in longitudinal direction of the cargo hold (*See* **Fig. 4.6.2-9**) ℓ_{IB}: Length of inner bottom plating (m) measured at the centreline of the cargo hold (*See* **Fig. 4.6.2-9**)	
(1) Defined as positive when the load acts forward direction on the plating. (2) Defined as positive when the load acts to portside on the plating. (3) Defined as positive when the load acts downward on the plating.	

Fig. 4.6.2-9 Parameters for Dynamic Shear Load of Dry Bulk Cargo

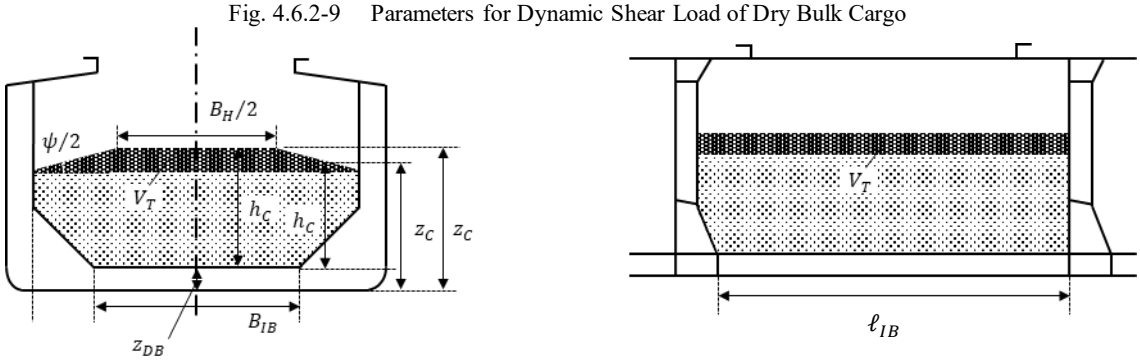

Transverse section

Longitudinal section

4 Where the static load due to dry bulk cargo, in vertical direction, acting on the cargo hold in analysis is different from the load equivalent to the mass M (t) specified in **Table 4.6.2-16** for reasons related to the analysis software and structure model, the pressure is to be corrected so as to be equivalent to the mass considering the density of the dry bulk cargo ρ_C (t/m^3).

4.6.2.7 Container Cargo Loads

1 Static load of container cargoes F_{cs} (*kN*) acting on cargo holds, hatch coamings, etc. is to be in accordance with **Table 4.6.2-20.**

Table 4.6.2-20 Static Load F_{cs} of Container Cargo

Member on which load acts(1)	Static load F_{cs} of container cargo (*kN*)
Inner bottom plating, step in cargo hold, deck, etc.	$-\frac{F_a}{n_{cf}}$
Notes: F_a: Permissible stack weight (*kN*) in holds and on the deck specified by the designer n_{cf}: Number of locations where one container cargo is in contact with the hull; in principle, to be 4	
(1) To be given as a point load at the point of contact with the bottom of the container stack.	

2 Dynamic load of container cargoes F_{cd} (*kN*) acting on cargo holds, hatch coamings, etc. is to be in accordance with **Table 4.6.2-21.**

Table 4.6.2-21 Dynamic Load F_{cd} of Container Cargo

Direction under consideration(1)	Dynamic load of container cargo F_{cd} (*kN*)
Longitudinal direction	$-C_C\frac{F_a}{n_{tier}n_{cf}g}a_{X-CG}$
Transverse direction	$-C_C\frac{F_a}{n_{tier}n_{cf}g}a_{Y-CG}$
Vertical direction	$-\frac{F_a}{n_{cf}g}a_{Z-CG}$
Notes: C_C: Coefficient related to lashing of container cargo; to be taken as 0.5 for dynamic load in the cargo hold and as 1.0 for dynamic loads on decks and hatch covers F_a, n_{cf}: As specified in **Table 4.6.2-20** n_{tier}: Number of container tiers $a_{X-CG}, a_{Y-CG}, a_{Z-CG}$: Acceleration ($m/s^2$) in the longitudinal, transverse and vertical directions at the centre of gravity of the container under consideration, to be calculated in accordance with **Table 4.6.2-14**(2)	
(1) The vertical dynamic load is given at the point of contact with the bottom of the container stack, and the longitudinal and transverse dynamic loads are given at the position where the container supporting arrangements are installed as point loads. (2) In container carriers, the acceleration at the hold volumetric centre of gravity is used considering the container cargo in the hold as one assembly. Container cargoes loaded on hatch covers may also be regarded as one assembly, and the centre of gravity of the assembly may be used.	

4.6.2.8 Internal Pressure due to Loaded Materials other than Liquid Loaded, Dry Bulk Cargoes and Container Cargoes

Static pressure P_{xs} (kN/m^2) due to loaded materials not corresponding to **4.6.2.5** to **4.6.2.7** is to be calculated by dividing the weight of the loaded materials (*kN*) by the area (m^2) in the range subject to the said loaded materials. Dynamic pressure P_{xd} (kN/m^2) is to be the pressure for which the acceleration specified in **Table 4.6.2-14** is considered and is to be considered as a line load or a point load depending on the type of the load.

4.6.2.9 Weight of Hull Structure, Etc.

1 Self-weight of hull structure and the dynamic load due to ship motions are to be considered. It is to be noted that the dynamic load due to ship motions acts in the direction opposite to the accelerations specified in **Table 4.6.2-14.**

2 Consideration of loads generated by equipment, etc. may be required where deemed necessary by the Society.

4.6.2.10 Hull Girder Loads

Vertical bending moment M_{V-HG} (*kN-m*) and horizontal bending moment M_{H-HG} (*kN-m*) acting on the hull are to be in accordance with the following formulae:

$M_{V-HG} = M_{SV} + C_{4v}M_{WV}$

$M_{H-HG} = C_{4h}M_{WH}$

M_{SV}: Permissible maximum or permissible minimum vertical still water bending moment (*kN-m*) as specified in **4.3.2.2**. However, instead of the permissible maximum or permissible minimum vertical still water bending moment, the maximum or minimum vertical still water bending moment for each loading condition considered may be used in consideration of all physically possible combinations of loading conditions, e.g. such as filling consumed tanks, empty tanks, etc.

M_{WV}: Vertical wave bending moment (*kN-m*) in the hogging and sagging conditions, as given by the following formulae:

For the hogging condition, $M_{WV-h} = 0.19C_1C_2{L_C}^2BC_{B1}$

For the sagging condition, $M_{WV-s} = -0.11C_1C_2{L_C}^2B(C_{B1} + 0.7)$

C_2: As specified in **Table 4.6.2-22**. Intermediate values are to be obtained by linear interpolation. For ships with high speed and/or large flares, use of the values specified in **Table 4.3.2-2** may be required where deemed necessary by the Society.

M_{WH}: Horizontal wave bending moment (*kN-m*) , as given by the following formula:

$$M_{WH} = 0.32C_RC_1C_3{L_C}^2T_{LC}\sqrt{\frac{L_C - 35}{L_C}}$$

C_R: Coefficient considering the effect of ship operation, to be taken as 0.85

C_3: As specified in **Table 4.6.2-22. Intermediate** values are to be obtained by linear interpolation.

C_{4v}: Superposition coefficient as specified in **Table 4.6.2-23**

C_{4h}: Superposition coefficient as specified in **Table 4.6.2-23**

Table 4.6.2-22 Coefficient of Distribution along the Ship Length, C_2 and C_3

x/L_C	C_2	C_3
$x/L_C \leq 0$	0.0	0.0
$x/L_C = 0.35$	0.875	1.0
$x/L_C = 0.4$	1.0	1.0
$x/L_C = 0.65$	1.0	1.0
$x/L_C \geq 1.0$	0.0	0.0

Table 4.6.2-23 Coefficients C_{4v} and C_{4h}

Equivalent design wave		M_{SV}	M_{WV-h} or M_{WV-s}		M_{WH}	
			C_{4v}	Condition	C_{4h}	Condition
HM	*HM*-1	M_{SV_max} or/and M_{SV_min} (1)	1.0	Sagging	0.0	—
	HM-2			Hogging		—
FM	*FM*-1		$0.4f_T + 0.6$	Sagging	0.0	—
	FM-2			Hogging		
BR	*BR*-1*P*		$0.2f_T - 0.1$	Sagging	$1.2 - 1.1f_T$	Port side (compression)
	BR-2*P*			Hogging	$1.1f_T - 1.2$	Port side (tension)
	BR-1*S*			Sagging	$1.1f_T - 1.2$	Starboard side (compression)
	BR-2*S*			Hogging	$1.2 - 1.1f_T$	Starboard side (tension)
BP	*BP*-1*P*		$0.5f_T - 0.15$	Sagging	$0.7 - 0.7f_T$	Port side (compression)
	BP-2*P*			Hogging	$0.7f_T - 0.7$	Port side (tension)
	BP-1*S*			Sagging	$0.7f_T - 0.7$	Starboard side (compression)
	BP-2*S*			Hogging	$0.7 - 0.7f_T$	Starboard side (tension)

Notes:

M_{SV_max}, M_{SV_min}: Permissible maximum vertical still water bending moment and minimum permissible vertical still water bending moment in 4.3.2.2

(1) To be selected according to loading condition under consideration.

4.6.3 Harbour Condition

4.6.3.1 Loading Conditions

1 The loading condition in which the difference between the internal and external pressures acting on the bottom structure or side structure reaches the maximum and the loading condition in which the internal pressure acting on the bulkhead structure reaches the maximum are to be considered.

2 Notwithstanding **-1** above, the loading condition is to be considered separately for ships where deemed necessary by the Society.

4.6.3.2 External Pressure

1 Hydrostatic pressure is to be considered as external pressure acting on the hull.

2 External pressure P_{PT-ex} (kN/m^2) acting on the outer shell is to be in accordance with the following formula:

$P_{PT-ex} = P_{exs}$

P_{exs}: Hydrostatic pressure (kN/m^2), as specified in 4.6.2.4-1

4.6.3.3 Internal Pressure

1 Loads due to cargoes, ballast and other cargoes are to be considered as internal pressure acting on the hull.

2 Internal pressure P_{PT-in} (kN/m^2) acting on tanks and ballast holds loaded with liquids is to be in accordance with the following formulae:

For ballast tanks, $P_{PT-in} = P_{ls} + \rho_L g h_{air}$

For other tanks, $P_{PT-in} = P_{ls}$

P_{ls}: Static pressure (kN/m^2), as specified in 4.6.2.5-1

ρ_L: Density of liquid loaded (t/m^3), as specified in Table 4.6.2-12

h_{air}: Height of air pipe or overflow pipe above the top of the tank (m)

3 Internal pressure P_{PT-in} (kN/m^2) acting on cargo holds loaded with dry bulk cargoes in the full and partial load conditions is to be in accordance with the following formula:

$P_{PT-in} = P_{bs}$

P_{bs}: Static pressure (kN/m^2), as specified in **4.6.2.6-1**

4 The container load F_{in_hold} (kN) acting on cargo holds and the container load F_{on_deck} (kN) acting on hatch coamings, etc. loaded with container cargoes are to be in accordance with the following formulae:

$F_{in_hold} = F_{cs}$

$F_{on_deck} = F_{cs}$

F_{cs}: Static load (kN) as specified in **4.6.2.7-2**

5 Internal pressure P_{xs} (kN/m^2) due to loaded materials not corresponding to **-2** to **-4** above is to be calculated by dividing the weight of the loaded material (kN) by the area (m^2) in the range subject to said loaded material and is to be considered as a line load or a point load depending on the type of loaded material.

4.6.3.4 Weight of Hull Structure, Etc.

1 The effect of gravitational acceleration acting on the hull structure in still water is to be considered.

2 Consideration of the loads due to equipment, etc., may be required where deemed necessary by the Society.

4.6.3.5 Vertical Bending Moment in Port

1 The vertical bending moments considered in the harbour condition are to be the maximum vertical bending moment in harbour M_{PT_max} (kN-m) and the minimum vertical bending moment in harbour M_{PT_min} (kN-m).

2 M_{PT_max} is to be not less than 1.1 *times* the permissible maximum vertical still water bending moment during voyage M_{SV_max} specified in **4.3.2.2**. M_{PT_min} is to be not greater than 1.1 *times* the permissible minimum vertical still water bending moment during voyage M_{SV_min} specified in **4.3.2.2**.

3 Notwithstanding **-2**, when the designer determined the maximum vertical bending moment and the minimum vertical bending moment in the loading condition in harbour considering the cargo loading/unloading sequence, those values are to be considered. In this case, values of M_{PT_max} less than the value in **-2** above and M_{PT_min} greater than the value in **-2** above may be used. However, M_{PT_max} is not to be less than M_{SV_max} and M_{PT_min} is not to be greater than M_{SV_min}.

4.6.4 Testing Condition

4.6.4.1 General

As the testing condition, a condition reproducing the hydrostatic test (structure test) according to the requirements in item10(1), **Table B2.7, Part B** is to be considered. The external and internal pressures are to be in accordance with the planned pressures or those in the hydrostatic test.

4.6.4.2 External Pressure

The external pressure P_{ST-ex} (kN/m^2) acting on the hull is to be the hydrostatic pressure corresponding to the draught described in the test plan approved by the Society according to the requirements in **2.1.7-1(2)**, **Part B**.

4.6.4.3 Internal Pressure

1 Internal pressure P_{ST-in} (kN/m^2) acting on the hull and tanks is to be in accordance with **Table 4.6.4-1**.

2 Where the hydrostatic test is conducted under conditions exceeding the pressure specified in **-1** above, the said test pressure is to be used.

Table 4.6.4-1 Internal Pressure P_{ST-in} in Testing Condition

Position under consideration	Internal pressure P_{ST-in} (kN/m^2)
$z \le z_{ST}$	$P_{ST-in} = \rho g(z_{ST} - z)$
$z > z_{ST}$	0
Notes: z_{ST}: Height (m) of water head in hydrostatic test, as specified in **Table 4.6.4-2**	

Table 4.6.4-2 Design Testing Water Head Height z_{ST}

Compartment	z_{ST}
Double bottom tanks(1)	$z_{ST} = \max(z_{top} + h_{air}, z_{top} + 2.4, z_{bd})$(3)
Double side tanks	$z_{ST} = \max(z_{top} + h_{air}, z_{top} + 2.4, z_{bd})$(3)
Deep tanks not described in this Table	$z_{ST} = \max(z_{top} + h_{air}, z_{top} + 2.4)$(3)
Cargo oil tanks	$z_{ST} = \max(z_{top} + h_{air}, z_{top} + 2.4, z_{top} + z_{PV})$(3)
Ballast holds of bulk carriers	$z_{ST} = z_{hc}$
Peak tanks (fore and aft peak tanks)	$z_{ST} = \max(z_{top} + h_{air}, z_{top} + 2.4)$(3)
Chain lockers	$z_{ST} = z_c$
Ballast ducts	$z_{ST} = \max(z_{bp}, z_{PRV})$
Fuel oil tanks	$z_{ST} = \max(z_{top} + h_{air}, z_{top} + 2.4, z_{top} + z_{PV}, z_{bd})$(3)
Cargo tanks of ships carrying dangerous chemicals in bulk(2)	$z_{ST} = \max(z_{top} + 2.4, z_{top} + z_{PV})$(3)
Cargo tanks of ships carrying liquefied gas in bulk	According to **Part N**
Low-flashpoint fuel tanks storing natural gas	According to **Part GF**
Edible liquid tanks (independent tanks)	$z_{ST} = \max(z_{top} + h_{air}, z_{top} + 0.9)$
Fuel oil overflow tanks not intended to hold fuel	$z_{ST} = \max(z_{top} + h_{air}, z_{top} + 2.4, z_{bd})$(3)

Notes:

z_{top}: Z coordinate of the top of tank (m) (highest point of tank excluding small hatchways)

z_{bd}: Z coordinate of the bulkhead deck (m)

z_{PRV}: Z coordinate of the test water head (m) corresponding to the setting of pressure relief valve

z_{PV}: Height of the test water head (m) corresponding to the design vapour pressure

z_{hc}: Z coordinate (m) at the top of the hatch coaming

z_c: Z coordinate (m) at the top of chain pipe

z_{bp}: Z coordinate of the test water head (m) corresponding to maximum pressure of ballast pump

h_{air}: Height of the air pipe or overflow pipe (m) above the top of the tank

(1) For double bottom tanks connected with hopper side tanks, topside tanks or double side tanks, z_{ST} corresponding to "hopper side tanks, topside tanks, double side tanks, fore and aft peaks used as tanks, and cofferdams" is applicable.

(2) For tanks loaded with cargoes having specific gravity exceeding 1.0, an additional water head in accordance with *Note*3*, **Table An1.4-2, Annex 2.1.5 Part B** is to be considered.

(3) For ships not subject to *SOLAS Convention*, "0.3D + 0.76, but not greater than 2.4" can be used instead of "2.4", where D is the depth of the ship (m).

4.6.4.4 Weight of Hull Structure, Etc.

The effect of gravitational acceleration acting on the hull structure in still water is to be considered.

4.6.4.5 Vertical Bending Moment

Vertical bending moment acting on the hull may be taken as 0 *kN-m* in the testing condition.

4.6.5 Flooded Condition

4.6.5.1 Loading Condition and Flooded Compartment

1 The compartment to be flooded is to be determined so as to maximise the stress in the member being evaluated. The water head of the compartment to be flooded is to be set so as to obtain Z coordinate where the deepest equilibrium waterline is the greatest or the

height of the freeboard deck. For ships applying the damage stability requirements specified in 2.3, flooded conditions in which the survival probability is 0 may not be considered. For ships applying damage stability requirements different from 2.3, the condition is to be based on the flooding cases considered in those requirements.

2 In principle, the cargo load need not be considered.

4.6.5.2 External Pressure

External pressure P_{FD-ex} (kN/m^2) acting on the outer shell is to be in accordance with **Table 4.6.5-1, but** is not to be less than 0.

Table 4.6.5-1 External Pressure P_{FD-ex} in Flooded Condition

External pressure P_{FD-ex} (kN/m^2)	
$FD1$(1)(2)	$P_{FD-ex} = \rho g h_{FD1}$
$FD2$(1)(2)	$P_{FD-ex} = \rho g h_{FD2}$
$FD3$(1)	$P_{FD-ex} = \rho g (z_{FB} - z)$

Notes:

h_{FD1}, h_{FD2}: Assumed draught height (m) in the flooded condition from the position under consideration, as given by the following formulae:

$h_{FD1} = y \sin\theta_{FD} + (z_{FD} - z)\cos\theta_{FD}$

$h_{FD2} = -y \sin\theta_{FD} + (z_{FD} - z)\cos\theta_{FD}$

z_{FD}: Z coordinate (m) of the greatest value among deepest equilibrium waterline at the centreline amidships (1) (2) (3)

θ_{FD}: Greatest value among the deepest equilibrium heel angle (rad) (1) (2) (3).

z_{FB}: Z coordinate (m) of the freeboard deck at side in way of the transverse section under consideration(6)

(1) In case of $z_{FD} \geq z_{FB}$, $FD3$ may not be considered.

(2) For ships with structure symmetrical about centreline, either $FD1$ or $FD2$ may be considered.

(3) When the maximum draught was obtained based on the combination of z_{FD} and θ_{FD} in each case to be considered in damage stability calculations, the said draught may be regarded as the assumed draught height.

(4) For ships applying probabilistic damage stability requirements, the case where the probability of survival is 0 is excluded (i.e. is not to be considered). In addition, the case where the compartment adjacent to members being assessed does not flood, and the case where two adjacent compartments simultaneously flood may be excluded.

(5) For ships not applying probabilistic damage stability requirements, the case where the compartment adjacent to members being assessed does not flood and the case where two adjacent compartments simultaneously flood may be excluded.

(6) In situations where unintended structural responses are caused by loads acting on compartments other than the target hold, a water head to the satisfaction of the Society may be considered.

4.6.5.3 Internal Pressure

Internal pressure P_{FD-in} (kN/m^2) acting on watertight walls in a flooded compartment is to be in accordance with **Table 4.6.5-2**, but is not to be less than 0.

Table 4.6.5-2 Internal Pressure P_{FD-in} in Flooded Condition

Internal pressure P_{FD-in} (kN/m^2)	
$FD1^{(1)(2)}$	$P_{FD-in} = \rho g h_{FD1}$
$FD2^{(1)(2)}$	$P_{FD-in} = \rho g h_{FD2}$
$FD3^{(1)}$	$P_{FD-in} = \rho g (z_{FB} - z)$
Notes: h_{FD1}, h_{FD2}: As specified in **Table 4.6.5-1** z_{FB} : As specified in **Table 4.6.5-1**	
(1) In case of $z_{FD} \geq z_{FB}$, $FD3$ may not be considered. (2) For ships with structure symmetrical about centreline, either $FD1$ or $FD2$ may be considered.	

4.6.5.4 Weight of Hull Structure, Etc.

The effect of gravitational acceleration acting on the hull structure is to be considered. In case of $FD1$ and $FD2$, the effect of heel angle is to be considered.

4.6.5.5 Vertical Bending Moment in Flooded Condition

1 The maximum vertical bending moment in the flooded condition M_{FD_max} $(kN\text{-}m)$ and the minimum vertical bending moment in the flooded condition M_{FD_min} $(kN\text{-}m)$ acting on the hull are to be in accordance with the following formulae:

$M_{FD_max} = M_{SV_max} + 0.45 M_{WV-h}$

$M_{FD_min} = M_{SV_min} + 0.45 M_{WV-s}$

M_{SV_max}, M_{SV_min}: As specified in **4.3.2.2**

M_{WV-h}, M_{WV-s}: As specified in **4.3.2.3**

2 For ships where the vertical still water bending moment in the flooded condition is described in the loading manual, where the maximum vertical still water bending moment is greater than M_{FD_max} specified in **-1** above and/or where the minimum vertical still water vertical bending moment is less than M_{FD_min} specified in **-1** above, the maximum and/or minimum vertical still water bending moment are to be considered instead of those in **-1** above.

4.7 Loads to be Considered in Fatigue

4.7.1 General

4.7.1.1 General

1 The loads to be considered in the requirements for fatigue strength assessments in **Chapter 9** are to be as specified in this **4.7**.

2 The loads in the cyclic load condition are to be in accordance with **4.7.2**.

4.7.2 Cyclic Load Condition

4.7.2.1 Loading Conditions

1 Among the planned standard loading conditions, the loading conditions of the following **(1)** and **(2)** are to be considered.

(1) Full load condition

(2) Ballast condition

2 Where a loading condition other than **-1** above is planned to continue for an extended time, the said condition is to be considered.

3 The values in each loading condition specified in the loading manual are to be used for the metacentric height GM (m), height of the centre of gravity of the ship z_G (m), draught amidships T_{LC} (m) and the radius of gyration K_{xx} (m) in the loading conditions under consideration. Where these values are not obtained beforehand, values obtained from **Table 4.6.2-1** corresponding to the loading condition may be used.

4.7.2.2 Wave Conditions

1 In the fatigue strength assessment, the loads based on the equivalent design wave specified in **Table 4.6.2-2** are to be considered. The definitions of weather side down and weather side up are given in **Table 4.6.2-3.**

2 Consideration of equivalent design waves other than the waves in **-1** above may be required where deemed necessary by the Society.

4.7.2.3 Lateral Loads

1 External pressure P_{ex} (kN/m^2) acting on the outer shell is to be in accordance with the following formula, but is not to be less than 0.

$P_{ex} = P_{exs} + P_{exw}$

P_{exs}: Hydrostatic pressure (kN/m^2), as specified in **Table 4.7.2-1**

P_{exw}: Hydrodynamic pressure (kN/m^2), as specified in **Table 4.7.2-1**

2 Internal pressure P_{in} (kN/m^2) acting on the hull, tanks, etc. due to loaded materials such as cargoes and ballast is to be in accordance with the following formula in each equivalent design wave, but is not to be less than 0.

$P_{in} = P_{ins} + P_{ind}$

P_{ins}: Static pressure (kN/m^2), as specified in **Table 4.7.2-1**

P_{ind}: Dynamic pressure (kN/m^2), as specified in **Table 4.7.2-1**

3 Notwithstanding **-2** above, the container load F_c (kN) acting on cargo holds, hatch coamings, etc. where containers are stowed is to be taken as the following formula, but is not to be less than 0. The direction in which the container load acts is to be in accordance with the coordinate system in **1.4.3.6**.

$F_c = F_{cs} + F_{cd}$

F_{cs}: Static load of container cargo (kN), as specified in **Table 4.7.2-1**

F_{cd}: Dynamic load of container cargo (kN), as specified in **Table 4.7.2-1**

4 Notwithstanding **-2** and **-3** above, where the design load is given to a specified member, consideration of the said load may be required.

Table 4.7.2-1 Lateral Loads

External pressure P_{ex}	Internal pressure P_{in}			Container load F_c
	Liquid loaded (e.g. liquid cargoes, ballast water)	Dry bulk cargo	Other than the left and container cargoes	Container cargoes
P_{exs} (**4.7.2.4-1**)	$P_{ins} = P_{ls}$ (**4.7.2.5-1**)	$P_{ins} = P_{bs}$ (**4.7.2.6-1**)	$P_{ins} = P_{xs}$ (**4.7.2.8**)	F_{cs} (**4.7.2.7-1**)
P_{exw} (**4.7.2.4-2**)	$P_{ind} = P_{ld}$ (**4.7.2.5-2**)	$P_{ind} = P_{bd}$ (**4.7.2.6-2**)	$P_{ind} = P_{xd}$ (**4.7.2.8**)	F_{cd} (**4.7.2.7-2**)
Notes: Numbers in parentheses ( ) indicate the section of the referenced requirements.				

4.7.2.4 External Pressure due to Seawater

1 Hydrostatic pressure P_{exs} corresponding to the draught T_{LC} (m) in the loading condition under consideration is to be considered (*See* **Table 4.7.2-2**).

Table 4.7.2-2 Hydrostatic Pressure P_{exs}

Position under consideration	Hydrostatic Pressure P_{exs} (kN/m^2)
$z \le T_{LC}$	$\rho g(T_{LC} - z)$
$z > T_{LC}$	0

2 Hydrodynamic pressure P_{exw} specified in the following **(1)** to **(4)** is to be considered.

(1) Hydrodynamic pressure in equivalent design wave *HM* is to be in accordance with **Table 4.7.2-3** (*See* **Fig. 4.7.2-1**).

(2) Hydrodynamic pressure in equivalent design wave *FM* is to be in accordance with **Table 4.7.2-4** (*See* **Fig. 4.7.2-2**).

(3) Hydrodynamic pressure in equivalent design wave *BR* is to be in accordance with **Table 4.7.2-5** (*See* **Figs. 4.7.2-3** and **4.7.2-4**).

(4) Hydrodynamic pressure in equivalent design wave *BP* is to be in accordance with **Table 4.7.2-6** (*See* **Figs. 4.7.2-5** and **4.7.2-**

6).

Table 4.7.2-3 Hydrodynamic Pressure P_{exw} in Equivalent Design Wave *HM*

	Hydrodynamic Pressure P_{exw} (kN/m^2)		
	$z \le T_{LC}$	$T_{LC} < z \le T_{LC} + 2h_W$	$z > T_{LC} + 2h_W$
HM-1	$P_{exw} = \max(-P_{HM}, \rho g(z - T_{LC}))$	$P_{WL} - \frac{1}{2}\rho g(z - T_{LC})$	0
HM-2	$P_{exw} = \max(P_{HM}, \rho g(z - T_{LC}))$		

Notes:

P_{HM}: As given by the following formula:

$$P_{HM} = 0.5 C_{F_HM} C_M C_{HM1} H_{S_HM} (P_{HM1} + P_{HM2} + P_{HM3} + P_{HM4})$$

C_{F_HM}: Coefficient for fatigue, as given by the following formula:

$$C_{F_HM} = C_{F1_HM} C_{F2_HM}$$

C_{F1_HM}: Coefficient considering speed effects, to be taken as 0.93

C_{F2_HM}: Conversion coefficient for exceedance probability level considered in the fatigue strength assessment, to be taken as 0.22

C_M, C_{HM1}, H_{S_HM}: As specified in **Table 4.6.2-6**

$P_{HM1}, P_{HM2}, P_{HM3}, P_{HM4}$: As specified in **Table 4.6.2-6**

P_{WL}: Hydrodynamic pressure (kN/m^2) at the waterline in the equivalent design wave under consideration, as given by the following formula:

For $y \ge 0$, the value of P_{exw} at $y = B_{x1}/2$ and $z = T_{SC}$

For $y < 0$, the value of P_{exw} at $y = -B_{x1}/2$ and $z = T_{SC}$

B_{x1}: Moulded Breadth of ship (m) at the waterline of the draught in the transverse section of the hull under consideration. Where the draught position is not in the section, to be taken as $B_{x1} = 0$.

h_W: Water head (m) equivalent to the pressure at the waterline, as given by the following formula:

$$h_W = \frac{P_{WL}}{\rho g}$$

Fig. 4.7.2-1 Hydrodynamic Pressure in Equivalent Design Wave *HM*

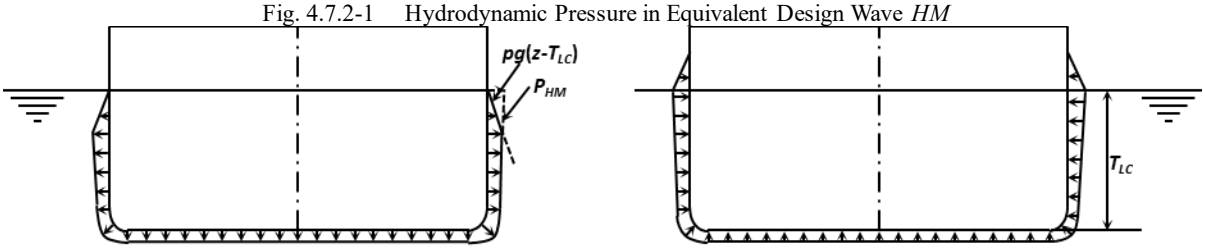

HM-1 *HM*-2

Table 4.7.2-4 Hydrodynamic Pressure P_{exw} in Equivalent Design Wave *FM*

	Hydrodynamic pressure P_{exw} (kN/m^2)		
	$z \le T_{LC}$	$T_{LC} < z \le T_{LC} + 2h_W$	$z > T_{LC} + 2h_W$
FM-1	$P_{exw} = \max(-P_{FM}, \rho g(z - T_{LC}))$	$P_{WL} - \frac{1}{2}\rho g(z - T_{LC})$	0
FM-2	$P_{exw} = \max(P_{FM}, \rho g(z - T_{LC}))$		

Notes:

P_{WL}, h_W: As specified in **Table 4.7.2-3**

P_{FM}: As given by the following formula:

$$P_{FM} = 0.5 C_{F_FM} C_M C_{FM1} H_{S_FM} (P_{FM1} + P_{FM2} + P_{FM3} + P_{FM4})$$

C_{F_FM}: Coefficient for fatigue, as given by the following formula:

$$C_{F_FM} = C_{F1_FM} C_{F2_FM}$$

C_{F1_FM}: Coefficient considering speed effects, to be taken as 0.96

C_{F2_FM}: Conversion coefficient for probability level considered in fatigue strength assessment, to be taken as 0.23

C_M, C_{FM1}, H_{S_FM}: As specified in **Table 4.6.2-7**

$P_{FM1}, P_{FM2}, P_{FM3}, P_{FM4}$: As specified in **Table 4.6.2-7**

Fig. 4.7.2-2 Hydrodynamic Pressure Distribution Amidships in Equivalent Design Wave *FM*

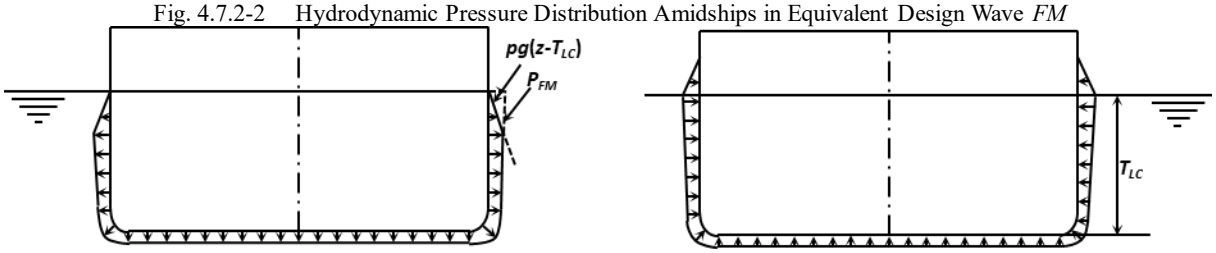

FM-1 *FM*-2

Table 4.7.2-5 Hydrodynamic Pressure P_{exw} in Equivalent Design Wave *BR*

	Hydrodynamic pressure P_{exw} (kN/m^2)		
	$z \le T_{LC}$	$T_{LC} < z \le T_{LC} + 2h_W$	$z > T_{LC} + 2h_W$
BR-1*P*	$P_{exw} = \max(P_{BR}, \rho g(z - T_{LC}))$	$P_{WL} - \frac{1}{2}\rho g(z - T_{LC})$	0
BR-2*P*	$P_{exw} = \max(-P_{BR}, \rho g(z - T_{LC}))$		
BR-1*S*	$P_{exw} = \max(P_{BR}, \rho g(z - T_{LC}))$		
BR-2*S*	$P_{exw} = \max(-P_{BR}, \rho g(z - T_{LC}))$		

Notes:

P_{WL}, h_W: As specified in **Table 4.7.2-3**

P_{BR}: As given by the following formula:

$$P_{BR} = 0.5 C_{F_BR} C_M C_{BR1} H_{S_BR} (P_{BR1} + P_{BR2} + P_{BR3})$$

C_{F_BR} : Coefficient for fatigue, as given by the following formula:

$$C_{F_BR} = C_{F1_BR} C_{F2_BR}$$

C_{F1_BR}: Coefficient considering speed effects, to be taken as 0.93

C_{F2_BR}: Conversion coefficient for probability level considered in fatigue strength assessment, to be taken as 0.23

C_M, C_{BR1}, H_{S_BR}: As specified in **Table 4.6.2-8**

$P_{BR1}, P_{BR2}, P_{BR3}$: As specified in **Table 4.6.2-8**

Fig. 4.7.2-3 Hydrodynamic Pressure Distribution Amidships in Equivalent Design Wave *BR*

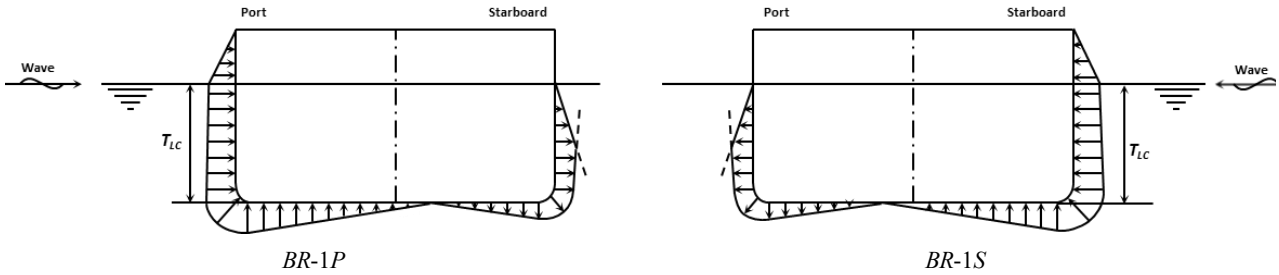

Fig. 4.7.2-4 Hydrodynamic Pressure Distribution Amidships in Equivalent Design Wave *BR*

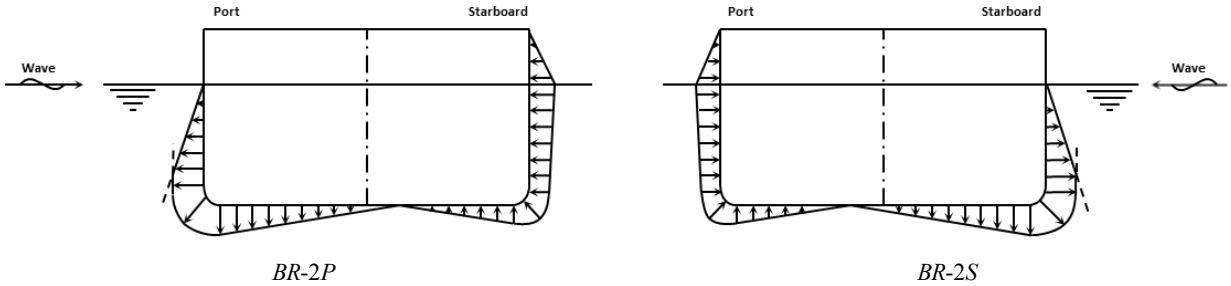

Table 4.7.2-6 Hydrodynamic Pressure P_{exw} in Equivalent Design Wave *BP*

	Hydrodynamic pressure P_{exw} (kN/m^2)		
	$z \le T_{LC}$	$T_{LC} < z \le T_{LC} + 2h_W$	$z > T_{LC} + 2h_W$
BP-1*P*	$P_{exw} = \max(P_{BP}, \rho g(z - T_{LC}))$	$P_{WL} - \frac{1}{2}\rho g(z - T_{LC})$	0
BP-2*P*	$P_{exw} = \max(-P_{BP}, \rho g(z - T_{LC}))$		
BP-1*S*	$P_{exw} = \max(P_{BP}, \rho g(z - T_{LC}))$		
BP-2*S*	$P_{exw} = \max(-P_{BP}, \rho g(z - T_{LC}))$		

Notes:

P_{WL}, h_W: As specified in **Table 4.7.2-3**

P_{BP}: As given by the following formula:

$$P_{BP} = 0.5 C_{F_BP} C_M C_{BP1} H_{S_BP} C_{PD} (P_{BP1} + P_{BP2} + P_{BP3} + P_{BP4} + P_{BP5})$$

C_{F_BP}: Coefficient for fatigue, as given by the following formula:

$$C_{F_BP} = C_{F1_BP} C_{F2_BP}$$

C_{F1_BP}: Coefficient considering speed effects, to be taken as 0.96

C_{F2_BP}: Conversion coefficient for probability level considered in fatigue strength assessment, to be taken as 0.22

C_M, C_{BP1}, H_{S_BP}: As specified in **Table 4.6.2-9**

C_{PD}: Coefficient considering distribution along the ship length, as specified in **Table 4.6.2-9**

P_{BP1}, P_{BP2}, P_{BP3}, P_{BP4}, P_{BP5}: As specified in **Table 4.6.2-9**

Fig. 4.7.2-5 Hydrodynamic Pressure Distribution Amidships in Equivalent Design Wave *BP*

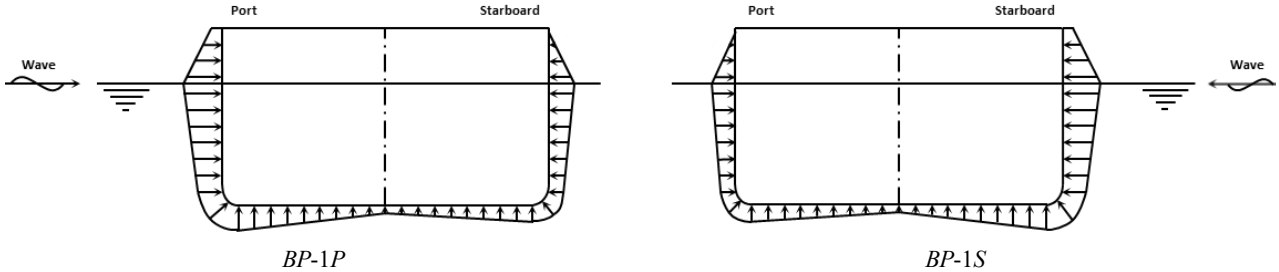

Fig. 4.7.2-6 Hydrodynamic Pressure Distribution Amidships in Equivalent Design Wave *BP*

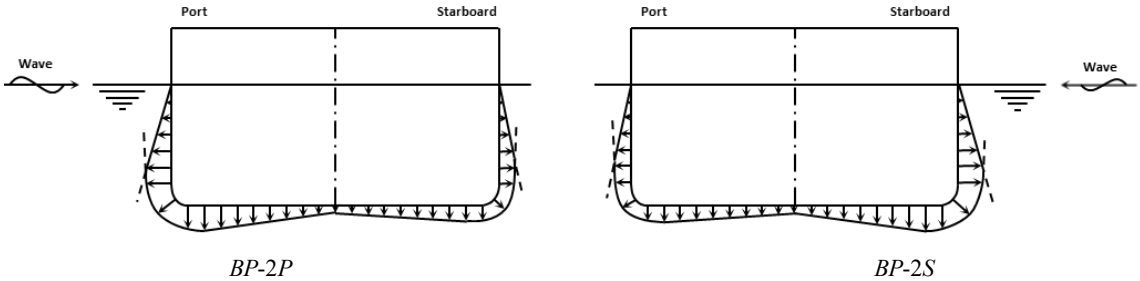

4.7.2.5 Internal Pressure due to Liquid Cargoes

1 Static pressure P_{ls} (kN/m^2) acting on tanks and ballast holds loaded with liquids is to be in accordance with **Table 4.7.2-7.**

2 Dynamic pressure P_{ld} (kN/m^2) acting on tanks and ballast holds loaded with liquids is to be as given in **Table 4.7.2-8**.

Table 4.7.2-7 Static Pressure P_{ls} in Tanks and Ballast Holds Loaded with Liquids

Types of tank and hold	Static pressure P_{ls} (kN/m^2)	
	$z \le z_{top}$	$z > z_{top}$
Cargo tanks fully loaded with liquid cargo (excluding liquefied gas)	$\rho_L g(z_{top} - z) + P_{PV}$	0
Cargo tanks fully loaded with liquefied gas and liquefied gas fuel tanks	$\rho_L g(z_{top} - z) + P_0$	0
Ballast holds	$\rho_L g(z_{top} - z)$	0
Ballast tanks and other tanks	$\rho_L g(z_{top} - z)$	0

Notes:

ρ_L: Density of liquid loaded (t/m^3), as specified in **Table 4.6.2-12**

z_{top}: *Z* coordinate of the highest point (m) of the tank, excluding small hatchways

P_{PV}: Design vapour pressure (kN/m^2) but not to be less than 25 kN/m^2

P_0: Design vapour pressure (kN/m^2). For cargo tanks, this value is not to be less than the *MARVS* specified in **1.1.4, Part N**. For liquefied gas fuel tanks, this value is not to be less than the *MARVS* specified in **2.2.1, Part GF**.

Table 4.7.2-8 Dynamic Pressure P_{ld} Acting on Tanks and Ballast Holds Loaded with Liquids

Type of loading compartment	Dynamic pressure P_{ld} (kN/m^2)	
	$z \leq z_{top}$	$z > z_{top}$
Cargo tanks fully loaded with liquid cargo (including liquefied gas), ballast holds and liquefied gas fuel tanks	$\rho_L[a_{X-TG}(x_{TG} - x) + a_{Y-TG}(y_{TG} - y) + a_{Z-TG}(z_0 - z)]$	0
Other than the above (e.g. ballast tanks)	$\rho_L[a_{X-TG}(x_0 - x) + a_{Y-TG}(y_0 - y) + a_{Z-TG}(z_0 - z)]$	0

Notes:

ρ_L: As specified in **Table 4.6.2-12**

a_{X-TG}, a_{Y-TG}, a_{Z-TG}: Acceleration at volumetric centre of gravity of tank or ballast hold under consideration, as specified in **Table 4.7.2-9**

x_0, y_0, z_0: X, Y and Z coordinates of reference point (m)(1)

z_{top}: As specified in **Table 4.7.2-7**

(1) The reference point is to be taken as the point with the highest value of V_j, calculated for all points that define the upper boundary of the tank or the ballast hold excluding the points located at the height equal to or below the volumetric centre of gravity of the said tank and hold.

$V_j = a_{X-TG}(x_j - x_{TG}) + a_{Y-TG}(y_j - y_{TG}) + (a_{Z-TG} + g)(z_j - z_{TG})$

x_j, y_j, z_j: X, Y and Z coordinates of point j (m) on the upper boundary of the tank or the ballast hold excluding the points located at the height equal to or below the volumetric centre of gravity of the said tank and hold

x_{TG}, y_{TG}, z_{TG}: X, Y and Z coordinates (m) at volumetric centre of gravity of the tank or ballast hold under consideration

Table 4.7.2-9 Accelerations a_X, a_Y and a_Z at Any Position

Equivalent design wave		Longitudinal acceleration a_X (m/s^2)	Transverse acceleration a_Y (m/s^2)	Vertical acceleration a_Z (m/s^2)
HM	*HM*-1	$-0.6g \cdot \sin\phi$ $+(-0.2f_T + 0.3)a_1$ $-0.7a_5(z - z_G)$	0	$(-0.15 + 0.5f_T)a_3$ $+0.7a_5(x - x_G)$
	HM-2	$0.6g \cdot \sin\phi$ $+(0.2f_T - 0.3)a_1$ $+0.7a_5(z - z_G)$	0	$(0.15 - 0.5f_T)a_3$ $-0.7a_5(x - x_G)$
FM	*FM*-1	$0.1g \cdot \sin\phi$ $+(-0.4f_T + 0.2)a_1$ $+(0.02T_{LC} - 0.14)a_5(z - z_G)$	0	$0.075a_3$ $-(0.02T_{LC} - 0.14)a_5(x - x_G)$
	FM-2	$-0.1g \cdot \sin\phi$ $+(0.4f_T - 0.2)a_1$ $+(-0.02T_{LC} + 0.14)a_5(z - z_G)$	0	$-0.075a_3$ $-(-0.02T_{LC} + 0.14)a_5(x - x_G)$
BR	*BR*-1*P*	0	$-g \cdot \sin\theta$ $+(-0.2f_T + 0.2)a_2$ $-a_4(z - z_G)$	$g(\cos\theta - 1)$ $+(0.7 - 0.4f_T)a_3 + a_4 y$
	BR-2*P*	0	$g \cdot \sin\theta$ $+(0.2f_T - 0.2)a_2$ $+a_4(z - z_G)$	$g(\cos\theta - 1)$ $+(-0.7 + 0.4f_T)a_3 - a_4 y$
	BR-1*S*	0	$g \cdot \sin\theta$ $+(0.2f_T - 0.2)a_2$ $+a_4(z - z_G)$	$g(\cos\theta - 1)$ $+(0.7 - 0.4f_T)a_3 - a_4 y$
	BR-2*S*	0	$-g \cdot \sin\theta$ $+(-0.2f_T + 0.2)a_2$ $-a_4(z - z_G)$	$g(\cos\theta - 1)$ $+(-0.7 + 0.4f_T)a_3 + a_4 y$
BP	*BP*-1*P*	0	$-0.002\lambda_{BP}g \cdot \sin\theta$ $-0.3a_2 - 0.3a_4(z - z_G)$	$[1 - 1.6\exp(-0.012\lambda_{BP})]a_3$ $+0.3a_4 y$
	BP-2*P*	0	$0.002\lambda_{BP}g \cdot \sin\theta$ $+0.3a_2 + 0.3a_4(z - z_G)$	$[-1 + 1.6\exp(-0.012\lambda_{BP})]a_3$ $-0.3a_4 y$
	BP-1*S*	0	$0.002\lambda_{BP}g \cdot \sin\theta$ $+0.3a_2 + 0.3a_4(z - z_G)$	$[1 - 1.6\exp(-0.012\lambda_{BP})]a_3$ $-0.3a_4 y$
	BP-2*S*	0	$-0.002\lambda_{BP}g \cdot \sin\theta$ $-0.3a_2 - 0.3a_4(z - z_G)$	$[-1 + 1.6\exp(-0.012\lambda_{BP})]a_3$ $+0.3a_4 y$

Notes:

a_1, a_2, a_3, a_4, a_5: As specified in **4.2.3**

θ, ϕ: As specified in **4.2.2**

x_G: X coordinate (m) at the centre of gravity of the ship, to be taken as $x_G = 0.45L_C$. The value calculated based on the weight distribution corresponding to the considered loading condition may be used.

z_G: Z coordinate (m) at the centre of gravity of the ship in the loading condition under consideration

λ_{BP}: As specified in **Table 4.6.2-9**

4.7.2.6 Internal Pressure due to Dry Bulk Cargo

1 Static pressure P_{bs} (kN/m^2) acting on cargo holds loaded with dry bulk cargoes is to be in accordance with **Table 4.7.2-10.**

Table 4.7.2-10 Static Pressure P_{bs} Acting on Cargo Hold Loaded with Dry Bulk Cargo

Position under consideration	Static pressure P_{bs} (kN/m^2)(1)
$z \leq z_C$	$\rho_C K_C g(z_C - z)$
$z > z_C$	0

Notes:

ρ_C: Density of dry bulk cargo (t/m^3), as specified in **Table 4.7.2-11**(2)

K_C, z_C: As specified in **Table 4.6.2-15**

(1) When the upper surface of the cargo is at the position of the hatch coaming, the loads acting on the said member may not be considered.

(2) Both low density cargoes and high density cargoes are to be considered where deemed necessary by the Society.

Table 4.7.2-11 Dry Bulk Cargo Mass and Density for Fatigue Assessment

	Homogeneous loading condition	Alternate loading condition
	Cargo loaded up to top of hatch coaming	Other than the left (e.g. high density cargo loaded, etc.)
Dry bulk cargo mass M (t)	M_{Full}	M_{HD}
Cargo density ρ_C (t/m^3)	$\frac{M_{Full}}{V_{Full}}$	3.0(1)

Notes:

M_{Full}: Cargo mass (t) when loaded up to the top of the hatch coaming

M_{HD}: Designed maximum cargo mass (t) to be loaded in the cargo hold under consideration with the scantling draught

V_{Full}: Volume of the cargo hold (m^3) including the volume of the hatch coaming

(1) To be taken as 3.0 unless the designed maximum cargo density is specified in the loading manual.

2 Dynamic pressure P_{bd} (kN/m^2) acting on cargo holds loaded with dry bulk cargoes is to be in accordance with **Table 4.7.2-12**. As for the fatigue strength assessment by simplified stress analysis specified in **9.3**, $V_T = 0$ may be considered when loading density gravity cargo, etc.

Table 4.7.2-12 Dynamic Pressure P_{bd} in Hold Loaded with Dry Bulk Cargo

Position under consideration	Dynamic pressure P_{bd} (kN/m^2)(1)
$z \le z_C$	$\rho_C \left[C_{bx} a_{X-HG}(x_{HG} - x) + \frac{V_C}{V_C - V_T} C_{by} a_{Y-HG}(y_{HG} - y) + C_{bz} K_C a_{Z-HG}(z_C - z) \right]$
$z > z_C$	0

Notes:

ρ_C: As specified in **Table 4.7.2-11**

K_C, z_C: As specified in **Table 4.7.2-10**

C_{bx}: Coefficient considering the effect of friction between particles of granular cargoes, etc. to be taken as 0.34

C_{by}: Coefficient considering the effect of friction between particles of granular cargoes, etc. to be taken as 0.34

C_{bz}: Coefficient considering the effect of friction between particles of granular cargoes, etc. to be taken as 1.00

$a_{X-HG}, a_{Y-HG}, a_{Z-HG}$: Acceleration (m/s^2) in the longitudinal, transverse and vertical directions at the volumetric centre of gravity of the cargo hold under consideration, to be calculated in accordance with **Table 4.7.2-9**(2)

x_{HG}, y_{HG}: X and Y coordinates (m) at the volumetric centre of gravity of the cargo hold under consideration

V_C: When cargo is loaded to the top of the hatch coaming, to be taken as $V_C = V_{Full}$

For other cases, to be taken as $V_C = M/3.0$

V_{Full}, M: As specified in **Table 4.7.2-11**

V_T: As specified in **Table 4.6.2-17**

(1) Where the upper surface of the cargo is at the position of the hatch coaming, the loads acting on the said member may not be considered.

(2) Z coordinate (m) at the volumetric centre of gravity, to be taken as:
(a) Where cargo is loaded to the top of the hatch coaming, to be taken as $z_{DB} + h_{C_CL}/2$
(b) In other cases, $z_{DB} + h_C/2$. h_C is to be taken as the value at the centreline.

3 Where the height of the point on which the load is act z is equal to or less than z_C, the following shear loads **(1)** and **(2)** are to be considered for inner bottom plating and sloping plate in contact with the dry bulk cargo, in addition to the internal pressure acting on the cargo hold loaded with the dry bulk cargo in **-1** and **-2** above.

(1) Static shear load P_{bs-z} (kN/m^2), as specified in **Table 4.7.2-13**

(2) Dynamic shear loads P_{bd-x}, P_{bd-y} and P_{bd-z} (kN/m^2), as specified in **Table 4.7.2-14**

Table 4.7.2-13 Static Shear Load P_{bs-z} of Dry Bulk Cargo

Direction of member and acting load	Static shear load P_{bs-z} of dry bulk cargo (kN/m^2)
Parallel to bilge hopper plating and lower stool sloping plate(1)	$P_{bs-z} = \rho_C g (z_C - z) \frac{1 - K_C}{\tan \alpha}$

Notes:

ρ_C: As specified in **Table 4.7.2-11**

K_C, z_C: As specified in **Table 4.7.2-10**

α: Inclination angle (rad) to the horizontal plane of the panel under consideration, but where α exceeds $\pi/2$, α is to be $\pi/2$.

(1) Defined as positive when the load acts downward on plating.

Table 4.7.2-14 Dynamic Shear Loads P_{bd-x}, P_{bd-y} and P_{bd-z} of Dry Bulk Cargo

Direction of member and acting load	Dynamic shear load of dry bulk cargo (kN/m^2)
Longitudinal direction of inner bottom plating(1)	$P_{bd-x} = -(1 - C_{bx})\rho_C a_{X-HG} \frac{V_C}{B_{IB}\ell_{IB}}$
transverse direction of inner bottom plating(2)	$P_{bd-y} = -(1 - C_{by})\rho_C a_{Y-HG} \frac{V_C}{B_{IB}\ell_{IB}}$
Parallel to bilge hopper plating and lower stool sloping plate(3)	$P_{bd-z} = \rho_C a_{Z-HG}(z_C - z)\frac{1 - K_C}{\tan\alpha}$

Notes:

ρ_C: As specified in **Table 4.7.2-11**

C_{bx}, C_{by}: As specified in **Table 4.7.2-12**

V_C: As specified in **Table 4.7.2-12**

K_C, z_C: As specified in **Table 4.7.2-10**

α: As specified in **Table 4.7.2-13**

$a_{X-HG}, a_{Y-HG}, a_{Z-HG}$: As specified in **Table 4.7.2-12**

B_{IB}, ℓ_{IB}: As specified in **Table 4.6.2-19**

(1) Defined as positive when load acts forward on the plating.

(2) Defined as positive when load acts to portside on the plating.

(3) Defined as positive when load acts downward on the plating.

4 Where the static load due to dry bulk cargo, in vertical direction, acting on the cargo hold in analysis is different from the load equivalent to the mass M (t) specified in **Table 4.7.2-11** for reasons related to the analysis software and structure model, the pressure is to be corrected so as to be equivalent to the mass considering the density ρ_C (t/m^3) of the dry bulk cargo.

4.7.2.7 Container Cargo Loads

1 Static load of container cargoes F_{cs} (kN) acting on cargo holds, hatch coamings, etc. is to be in accordance with **Table 4.7.2-15.**

2 Dynamic load of container cargoes F_{cd} (kN) acting on cargo holds, hatch coamings, etc. is to be in accordance with **Table 4.7.2-16**.

Table 4.7.2-15 Static Load F_{cs} of Container Cargo

Member on which load acts (1)	Static load of container cargo F_{cs} (kN)
Inner bottom plating, step in cargo hold, deck, etc.	$-\frac{F_a}{n_{cf}}$

Notes:

F_a: Permissible stack weight (kN) in holds and on deck specified by the designer

n_{cf}: Number of places where one container cargo is in contact with the hull; in principle, to be 4.

(1) To be given as a point load at the point of contact with the bottom of the container stack.

Table 4.7.2-16 Dynamic Load F_{cd} of Container Cargo

Direction under consideration (1)	Dynamic load of container cargo F_{cd} (*kN*)
Longitudinal direction	$-C_C \frac{F_a}{n_{tier} n_{cf} g} a_{X-CG}$
Transverse direction	$-C_C \frac{F_a}{n_{tier} n_{cf} g} a_{Y-CG}$
Vertical direction	$-\frac{F_a}{n_{cf} g} a_{Z-CG}$

Notes:

C_C: Coefficient related to lashing of container cargo; to be taken as 0.5 for dynamic load in cargo hold and as 1.0 for dynamic loads on decks and hatch covers

F_a, n_{cf}: As specified in **Table 4.7.2-15**

n_{tier}: Number of container tiers

$a_{X-CG}, a_{Y-CG}, a_{Z-CG}$: Acceleration ($m/s^2$) in the longitudinal, transverse and vertical directions at the centre of gravity of the container under consideration, to be calculated in accordance with **Table 4.7.2-9**(2)

(1) The vertical dynamic load is given at the position of contact with the bottom of the container stack and the longitudinal and transverse dynamic loads are given at the position where the cell guide is installed as point loads.

(2) In container carriers, the acceleration at the hold volumetric centre of gravity is used considering the container cargo in the hold as one assembly. Container cargoes on hatch covers may also be regarded as one assembly, and the centre of gravity of the assembly may be used.

4.7.2.8 Internal Pressure due to Loads other than Liquid Loads, Dry Bulk Cargoes and Container Cargoes

Static pressure P_{xs} (kN/m^2) due to loaded materials not corresponding to **4.7.2.5** to **4.7.2.7** is to be calculated by dividing the weight of the materials (*kN*) by the area (m^2) in the range subject to the materials. Dynamic pressure P_{xd} (kN/m^2) is to be the pressure for which the acceleration specified in **Table 4.7.2-9** is considered, and is to be considered as a line load or a point load depending on the type of load.

4.7.2.9 Weight of Hull Structure, Etc.

1 Self-weight of hull structure and the dynamic load due to ship motions are to be considered. It is to be noted that the dynamic load due to ship motions acts in the direction opposite to the accelerations specified in **Table 4.7.2-9.**

2 Consideration of loads generated by equipment, etc. may be required where deemed necessary by the Society.

4.7.2.10 Hull Girder Loads

Vertical bending moment M_{V-HG} (*kN-m*) and horizontal bending moment M_{H-HG} (*kN-m*) acting on the hull are to be in accordance with the following formulae:

$$M_{V-HG} = M_{SV} + C_{4v} M_{WV}$$

$$M_{H-HG} = C_{4h} M_{WH}$$

M_{SV}: Vertical still water bending moment (*kN-m*). The value in the loading condition under consideration described in the loading manual is to be used.

M_{WV}: Vertical wave bending moment (*kN-m*) in the hogging and sagging conditions, as given by the following formulae:

In the hogging condition, $M_{WV-h} = 0.19 C_{F_WV} C_1 C_2 L_C{}^2 B C_{B1} / C_R$

In the sagging condition, $M_{WV-s} = -0.19 C_{F_WV} C_1 C_2 L_C{}^2 B C_{B1} / C_R$

C_{F_WV}: Coefficient for fatigue, as given by the following formula:

$$C_{F_WV} = C_{F1_WV} C_{F2_WV}$$

C_{F1_WV}: Coefficient considering speed effects, as given by the following formula:

$$C_{F1_WV} = 1.45 - 0.34 f_T$$

C_{F2_WV}: Conversion coefficient for exceedance probability level considered in the fatigue strength assessment, to be taken as 0.22

C_2: As specified in **4.6.2.10**

C_R: Coefficient considering the effect of ship operation, to be taken as 0.85

M_{WH}: Horizontal wave bending moment (*kN-m*), as given by the following formula:

$$M_{WH} = 0.32 C_{F_WH} C_1 C_3 L_C{}^2 T_{LC} \sqrt{\frac{L_C - 35}{L_C}}$$

C_{F_WH}: Coefficient for fatigue, as given by the following formula:

$C_{F_WH} = C_{F1_WH} C_{F2_WH}$

C_{F1_WH}: Coefficient considering speed effects, to be taken as 0.94

C_{F2_WH}: Conversion coefficient for exceedance probability level considered in the fatigue strength assessment, to be taken as 0.24

C_3: As specified in 4.6.2.10

C_{4v}: Superposition coefficient as specified in Table 4.7.2-17

C_{4h}: Superposition coefficient as specified in Table 4.7.2-17

Table 4.7.2-17 Coefficients C_{4v} and C_{4h}

Equivalent design wave		M_{SV}	M_{WV-h} or M_{WV-s}		M_{WH}	
			C_{4v}	Condition	C_{4h}	Condition
HM	*HM*-1	Value in the loading condition under consideration	1.0	Sagging	0.0	—
	HM-2			Hogging		—
FM	*FM*-1		$0.75f_T + 0.2$	Sagging	0.0	—
	FM-2			Hogging		
BR	*BR*-1*P*		$0.2f_T - 0.1$	Sagging	$1.1 - f_T$	Port side (compression)
	BR-2*P*			Hogging	$f_T - 1.1$	Port side (tension)
	BR-1*S*			Sagging	$f_T - 1.1$	Starboard side (compression)
	BR-2*S*			Hogging	$1.1 - f_T$	Starboard side (tension)
BP	*BP*-1*P*		$0.5f_T - 0.15$	Sagging	$0.6 - 0.6f_T$	Port side (compression)
	BP-2*P*			Hogging	$0.6f_T - 0.6$	Port side (tension)
	BP-1*S*			Sagging	$0.6f_T - 0.6$	Starboard side (compression)
	BP-2*S*			Hogging	$0.6 - 0.6f_T$	Starboard side (tension)

4.8 Loads to be Considered in Additional Structural Requirements

4.8.1 General

4.8.1.1 General

1 Loads to be considered in additional structural requirements in Chapter 10 are to be as specified in this 4.8.

2 Load in the maximum load condition is to be in accordance with 4.8.2.

3 Helicopter load is to be in accordance with 4.8.3.

4.8.2 Maximum Load Condition

4.8.2.1 General

1 Slamming loads acting on the bottom structure are to be in accordance with 4.8.2.2.

2 Loads due to bow impact are to be in accordance with 4.8.2.3.

3 Sloshing loads are to be in accordance with 4.8.2.4.

4.8.2.2 Bottom Slamming

1 In ships having a bow draught less than $0.037L_{C230}$ in the ballast condition, the bottom slamming load specified in the following **(1)** to **(3)** is to be considered. Here, "ballast condition" means the ordinary condition where only ballast tanks such as clean ballast tanks, segregated ballast tanks and ballast holds are ballasted. When multiple ballast conditions are planned, it is permissible to consider only the ballast condition specified for heavy weather conditions, limited to the case where the loading manual specifies a ballast condition for heavy weather. This ballast condition, however, excludes exceptional cases where cargo tanks are ballasted in heavy weather conditions to ensure the safety of the ship.

(1) In ships having a bow draught equal to or less than $0.025L_{C230}$ in the ballast condition, the bottom slamming load P_{SL1} (kN/m^2) specified in **Table 4.8.2-1** is to be considered. In ships having a bow draught greater than $0.025L_{C230}$ but less than $0.037L_{C230}$ in the ballast condition, the requirements specified in **10.6.2.3-2** are to be satisfied.

(2) Notwithstanding **(1)** above, in ships of which L_C is equal to or less than 150 m, where $V/\sqrt{L_C}$ is not less than 1.4 and C_B is not more than 0.7, the bottom slamming load P_{SL2A} (kN/m^2) and P_{SL2B} (kN/m^2) are to be as specified in **Table 4.8.2-2**. However, **(1)** above may be applied for ships that can be expected to carry a certain amount of cargo regularly such as container carriers.

(3) Notwithstanding **(1)** above, in ships of which L_C is equal to and greater than 150 m and C_B is not less than 0.7, the bottom slamming load P_{SL3} (kN/m^2) specified in **Table 4.8.2-3** is to be considered.

2 Notwithstanding the requirements of **(1)** to **(3)** in **-1** above, where the strengthened bottom forward is of structural arrangement other than that specified in **10.6.2.2(1)** and **10.6.3.2**, the bottom slamming loads P_{SL4A} (kN/m^2), P_{SL4B} (kN/m^2) and P_{SL4C} (kN/m^2) specified in **Table 4.8.2-4** are to be considered.

Table 4.8.2-1 Bottom Slamming Impact Pressure P_{SL1}

Structural member under consideration	Bottom slamming impact pressure P_{SL1} (kN/m^2)
Stiffeners attached to outer shell and bottom longitudinals(1)	$P_{SL1} = 2.48\dfrac{L_C C_{SL1A} C_{SL2}}{\beta_1}$

Notes:

C_{SL1A}: Coefficient, as specified in **Table 4.8.2-5**

C_{SL2}: Coefficient, as given by the following formula:

For $\dfrac{V}{\sqrt{L_C}} \leq 1.0$, 0.4

For $1.0 < \dfrac{V}{\sqrt{L_C}} < 1.3$, $0.667\dfrac{V}{\sqrt{L_C}} - 0.267$

For $\dfrac{V}{\sqrt{L_C}} \geq 1.3$, $1.5\dfrac{V}{\sqrt{L_C}} - 1.35$

β_1: Coefficient, as given by the following formula: (2)

$$\beta_1 = \frac{0.0025L_C}{b_1}$$

b_1: Distance (m) from the centreline to the intersection of the outer shell and the horizontal line where the height from the top of the keel equals $0.0025L_C$, measured at the transverse section of the hull $0.2L_C$ aft from the fore end (*See* **Fig. 4.8.2-1**)

(1) Formula for ships where the bow draught is not more than $0.025L_{C230}$ in the ballast condition. For ships where the bow draught is more than $0.025L_{C230}$ but less than $0.037L_{C230}$ in the said ballast condition, the scantlings of members are to be determined in accordance with the requirements in **10.6.2.3-2**.

(2) Where the value of C_{SL2}/β_1 is 11.43 or more, C_{SL2}/β_1 is to be taken as 11.43.

Table 4.8.2-2 Bottom Slamming Impact Pressures P_{SL2A} and P_{SL2B}

Structural member under consideration	Bottom slamming impact pressures P_{SL2A} and P_{SL2B} (kN/m^2)
Stiffeners attached to outer shell and bottom longitudinals (1)	$P_{SL2A} = 2.48\frac{L_C C_{SL1B} C_{SL2} C_{SL3}}{\beta_1}$
Floor(2)	$P_{SL2B} = 2.48\frac{L_C C_{SL1B} C_{SL2} C_{SL3}}{\beta_2}$

Notes:

C_{SL2},β_1: As specified in **Table 4.8.2-1**(3)

C_{SL1B}: Coefficient, as specified in **Table 4.8.2-5**

C_{SL3}: Coefficient, as given by the following formula:

$$C_{SL3} = 1.9 - 0.9\frac{T_{BALemp}}{0.025L_C}$$

T_{BALemp}: Minimum bow draught (m) in the ballast condition

β_2 : Coefficient, as given by the following formula(3):

$$\beta_2 = 0.0025L_C/b_2$$

b_2 : Distance (m) from the centreline to the intersection of the outer shell to the horizontal line where the height from the top of the keel equals $0.0025L_C$, at the transverse section of the hull $0.2L_C$ aft from the fore end. Where the bow draught is greater than $0.025L_C$ but less than $0.037L_C$ in ballast condition, the bow draught in the actual condition is to be used to calculate the horizontal line (*See* **Fig. 4.8.2-1**).

(1) Formula for ships where the bow draught is not more than $0.025L_C$ in the ballast condition. For ships where the bow draught is more than $0.025L_C$ but less than $0.037L_C$ in the ballast condition, the scantlings of members are to be determined in accordance with the requirements in **10.6.3.3-2**.

(2) Formula for ships where the bow draught is less than $0.037L_C$ in the ballast condition.

(3) Where the values of C_{SL2}/β_1 and C_{SL2}/β_2 are 11.43 or more, to be taken as 11.43.

Table 4.8.2-3 Bottom Slamming Impact Pressure P_{SL3}

Structural member under consideration	Bottom slamming impact pressure P_{SL3} (kN/m^2)
Stiffeners attached to outer shell and bottom longitudinals(1)(2)	$P_{SL3} = 1.14\frac{{V_{SL}}^2}{\beta_3}$

Notes:

β_3: Coefficient, as given by the following formula(3). However, where $1/\beta_3$ is 11.43 or more, to be taken as 11.43.

$$\beta_3 = 0.0025L_C/b_3$$

b_3 : Distance (m) from the centreline to the intersection of the outer shell and the horizontal line where the height from the top of the keel equals $0.0025L_C$, at the transverse section of the hull under consideration

V_{SL}: Relative speed (m/s) between ship's bottom and sea surface for the position under consideration, as given by the following formula:

$$V_{SL} = C_{SL4}\left[\frac{2\pi}{T_{\phi_SL}}\left(\sqrt{C_{SL5}} + 0.45H_{SL}\cos\phi_{SL1} + 0.18\lambda_{SL}\sin\phi_{SL1}\right) + 0.51C_{SL6}V\sin\phi_{SL1}\right]$$

C_{SL4}: Coefficient, as given by the following formula:

$$C_{SL4} = 1 - 0.015\left(\frac{L_C - 150}{150}\right)$$

C_{SL5}: Coefficient, as given by the following formula, but when 0 or less, to be taken as 0

$$C_{SL5} = (x - 0.45L_C)^2{\phi_{SL2}}^2 - (0.025L_{C230})^2$$

ϕ_{SL2}: Pitch angle (rad), as given by the following formula:

$$\phi_{SL2} = \frac{3.3(C_{SL6}V + 5)^{0.2}}{{L_C}^{1.2}\sqrt{C_B}}H_{SL}$$

H_{SL}: As given by the following formula, but not to be greater than $0.055\,L_C$ or 11.5, whichever is smaller.

$$H_{SL} = C_1\sqrt{\frac{L_C + \lambda_{SL} - 25}{L_C}}$$

C_{SL6}: As given by the following formula, but in any case, to be not less than 0 but not more than 1

$$C_{SL6} = \frac{2.5V}{\sqrt{L_C}} - 2.75$$

λ_{SL}: Wave length (m), as given by the following formula:

$$\lambda_{SL} = 0.6L_C\left(1.5 + \frac{0.0075L_C + 0.025L_{C230}}{2T_{SC}}\right)$$

T_{ϕ_SL}: Period (s) , as given by the following formula:

$$T_{\phi_SL} = \sqrt{\frac{2\pi\lambda_{SL}}{g}}$$

ϕ_{SL1}: Angle (rad) , as given by the following formula, but the value may not be greater than $0.015 + \phi_{SL2}$

$$\phi_{SL1} = 0.015 + \arctan\left(\frac{0.025L_{C230}}{x - 0.45L_C}\right)$$

(1) Formula for ships where the bow draught is not more than $0.025L_{C230}$ in the ballast condition. For ships where the bow draught is more than $0.025L_{C230}$ but less than $0.037L_{C230}$ in the ballast condition, the scantlings of members are to be determined in accordance with the requirements in **10.6.2.3-2.**

(2) For the examination of positions within ballast tanks which are fully loaded with sea water in the ballast condition, the bottom slamming load may be reduced by ΔP_{SL} (kPa), as given by the following formula. In this case, it is to be stated in the loading manual that the said ballast tank is to be filled up in the heavy weather condition.

$$\Delta P_{SL} = 5h_b$$

h_b: Ballast tank depth (m)

Table 4.8.2-4 Bottom Slamming Impact Pressures P_{SL4A}, P_{SL4B} and P_{SL4C} for Special Types of Construction

Ship and structural member		Bottom slamming impact pressure (kN/m^2)
Ships where L_C is not greater than 150 m, $V/\sqrt{L_C}$ is not less than 1.4 and C_B is not greater than 0.7	Floor of longitudinal framing system	$P_{SL4A} = C_{SL7}P_{SL2B}$
	Girder of transverse framing system	$P_{SL4A} = P_{SL2B}$
General	Floors and girders(1)	$P_{SL4B} = \max(C_{SL8}P_{SL1}, P_{\min})$
Ships where L_C is not greater than 150 m, $V/\sqrt{L_C}$ is not less than 1.4 and C_B is not greater than 0.7		$P_{SL4B} = \max(C_{SL8}P_{SL2B}, P_{\min})$
Ships where L_C is not less than 150 m and C_B is not less than 0.7		$P_{SL4B} = \max(C_{SL8}P_{SL3}, P_{\min})$
General	Stiffeners attached to outer shell or bottom longitudinals(2)	$P_{SL4C} = \max(C_{SL7}P_{SL1}, P_{\min})$
Ships where L_C is not greater than 150 m, $V/\sqrt{L_C}$ is not less than 1.4 and C_B is not greater than 0.7		$P_{SL4C} = \max(C_{SL7}P_{SL2A}, P_{\min})$
Ships where L_C is not less than 150 m and C_B is not less than 0.7		$P_{SL4C} = \max(C_{SL7}P_{SL3}, P_{\min})$

Notes:

C_{SL7}: As given by the following formula, but in any case, to be not less than 0.1 but not more than 1.0

$$C_{SL7} = \frac{3}{\ell}$$

ℓ: As specified in **10.6.2.3-1**

C_{SL8}: As given by the following formula but the value is to be 0.1 or more and 1.0 or less.

$$C_{SL8} = \frac{3}{A_{SL8}}$$

A_{SL8}: Area to be considered (m^2), as given by the following formula:

$$A_{SL8} = S_{SL8}\ell_{SL8}$$

S_{SL8}: Spacing (m) of solid floors (or girders) when solid floors (or girders) are under consideration

ℓ_{SL8}: Spacing (m) of primary supporting members such as girders (or solid floors) when solid floors (or girders) are under consideration

$P_{SL1}, P_{SL2A}, P_{SL2B}$ and P_{SL3}: As specified in **Tables 4.8.2-1**, **4.8.2-2** and **4.8.2-3**

$P_{\min}$: As given by the following formula:

$$P_{\min} = 1.015L_C \ (kN/m^2)$$

(1) For ships having bow draught of more than $0.025L_{C230}$ but less than $0.037L_{C230}$ in the ballast condition, to be obtained by linear interpolation assuming the bottom slamming impact pressure is $P_{\min}$ when the bow draught is $0.037L_{C230}$.

(2) Formula for ships having bow draught of not more than $0.025L_{C230}$ in the ballast condition. Where the bow draught is more than $0.025L_{C230}$ but less than $0.037L_{C230}$ in the ballast condition, the scantlings of members are to be determined in accordance with the requirements in **10.6.2.3-2** and **10.6.3.3-2.**

Table 4.8.2-5 Values of C_{SL1A} and C_{SL1B}

$V/\sqrt{L_C}$	1.0 or less	1.1	1.2	1.3	1.4	1.5	1.6	1.7	1.8 or more
C_{SL1A}	0.12	0.18	0.23	0.26	0.28	0.29			
C_{SL1B}	*NA*				0.31	0.33	0.36	0.38	0.40

Notes:

Intermediate values of C_{SL1A} and C_{SL1B} are to be obtained by linear interpolation.

Fig. 4.8.2-1. Measuring Method of b_1 and b_2

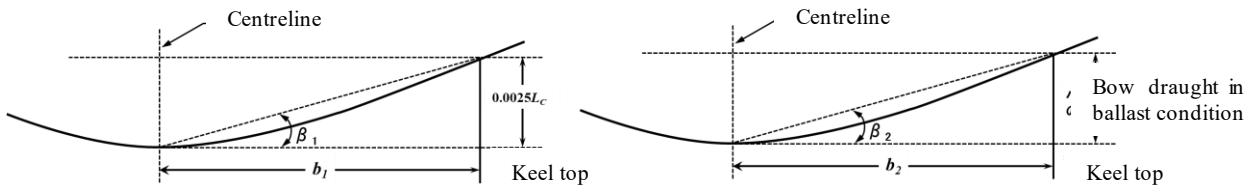

4.8.2.3 Bow Impact Pressure

1 For ships with large bow flares that operate at high speed (e.g. car carriers, container carriers, Ro-Ro ships, LNG carriers and refrigerated LPG carriers), the bow impact pressure P_{FB1} (kN/m^2) specified in **Table 4.8.2-6** is to be considered.

Table 4.8.2-6 Bow Impact Pressure P_{FB1}

Positions under consideration	Bow impact pressure P_{FB1} (kN/m^2)
Positions forward of $0.2L_C$ from the fore end and positions with large flare above the load line	$P_{FB1} = \frac{1}{2}\rho C_{FB1} C_{FB2}\left(\frac{V_{FB}}{\cos\beta_0}\right)^2$

Notes:

β_0: Relative impact angle (*rad*) between the hull surface and wave surface, as given by the following formula:

$$\beta_0 = \phi - \phi_b$$

ϕ: Angle (*rad*), as given by the following formula:

$$\phi = \arctan\left(\frac{1}{\tan\beta_k \cos\gamma}\right)$$

β_k: As given by the following formulae:

$$\text{For } \beta \le \frac{\pi}{4}, \beta_k = \beta_{k1} - \frac{\pi}{180}\sqrt{45 - \beta\frac{180}{\pi}}$$

$$\text{For } \beta > \frac{\pi}{4}, \beta_k = \beta_{k1} + \frac{\pi}{180}\sqrt{\beta\frac{180}{\pi} - 45}$$

β: Inclination angle (*rad*) of outer shell at the section under consideration (*See* **Fig. 4.8.2-2**)

β_{k1}: As given by the following formula:

$$\beta_{k1} = \left\{45\left[0.95\left(0.8 - \frac{x}{L_C}\right)\left(1.2 - \frac{x}{L_C}\right) + 1\right] - 0.02(z - T_{SC})(z - T_{SC} - 20)\right\}\frac{\pi}{180}$$

γ: Inclination angle (*rad*) of the outer shell at the section under consideration (*See* **Fig. 4.8.2-2**)

ϕ_b : As given by the following formulae:

$$\text{For } 0.8 \le \frac{x}{L_C} < 0.95, \phi_b = \left[\left(\frac{\phi_{bF} - 33}{0.15}\right)\left(\frac{x}{L_C} - 0.8\right) + 33\right]\frac{\pi}{180}$$

$$\text{For } 0.95 \le \frac{x}{L_C}, \phi_b = \phi_{bF}\frac{\pi}{180}$$

ϕ_{bF}: As given by the following formulae:

$$\text{For } L_C < 200, \phi_{bF} = 35$$

$$\text{For } 200 \le L_C < 400, \phi_{bF} = -\frac{L_C}{25} + 43$$

$$\text{For } 400 \le L_C, \phi_{bF} = 27$$

C_{FB1}: As specified in **Table 4.8.2-7**

C_{FB2}: As given by the following formula:

$$\text{For } \beta_0 \le \frac{\pi}{6}, C_{FB2} = \frac{\beta_0}{40}\frac{180}{\pi} + 0.25$$

$$\text{For } \beta_0 > \frac{\pi}{6}, C_{FB2} = 1.0$$

V_{FB}: Maximum relative speed (*m/s*) between the hull and wave surface at the point under consideration, as given by the following formula:

$$V_{FB} = \frac{v_x \tan\beta_k + v_z \tan\alpha \tan\beta_k}{\sqrt{\tan^2\alpha + \tan^2\beta_k + \tan^2\alpha \tan^2\beta_k}}$$

v_x: Relative speed in the longitudinal direction (*m/s*) at the position under consideration, as given by the following formula, but not to be 0 or less.

$v_x = (1 - C_{FB3})v_{x0}$

C_{FB3}: As specified in **Table 4.8.2-8**

v_{x0}: Relative speed in the longitudinal direction (*m/s*) at the waterline, as given by the following formula:

$v_{x0} = 0.36V + C_{FB4}\sqrt{L_C g}$

C_{FB4}: As specified in **Table 4.8.2-8**

v_z: Relative speed (*m/s*) in the vertical direction at the position under consideration, as given by the following formula, but not to be 0 or less.

$v_z = (1 - C_{FB5})v_{z0}$

C_{FB5}: As specified in **Table 4.8.2-8**

v_{z0}: Relative speed (*m/s*) in the ship depth direction at the waterline, as given by the following formula:

$v_{z0} = C_{FB6}\sqrt{L_C g}$

C_{FB6}: As specified in **Table 4.8.2-8**

α : Angle (*rad*), as given by the following formula:

$\alpha = \arctan\left(\frac{\tan\beta_k}{\tan\gamma}\right)$

Fig. 4.8.2-2 Inclination Angle of Outer Shell

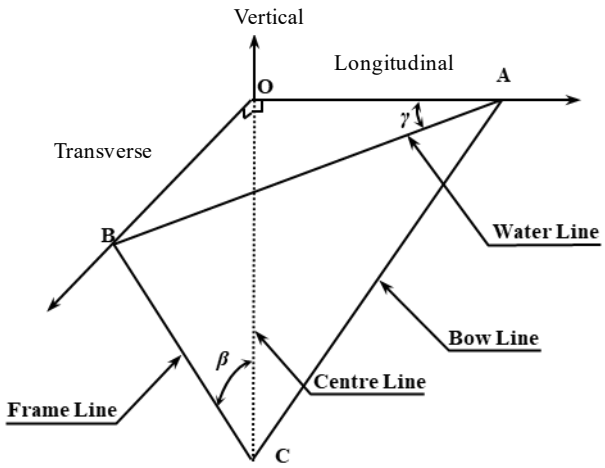

Table 4.8.2-7 Coefficient C_{FB1}

β_0	C_{FB1}
$\beta_0 < \frac{\pi}{60}$	255.85
$\frac{\pi}{60} \le \beta_0 < \frac{\pi}{45}$	$758.60\exp\left(-\frac{65.214}{\pi}\beta_0\right)$
$\frac{\pi}{45} \le \beta_0 < \frac{\pi}{30}$	$453.91\exp\left(\frac{-42.102\beta_0}{\pi}\right)$
$\frac{\pi}{30} \le \beta_0 < \frac{\pi}{18}$	$335.41\exp\left(\frac{-33.030\beta_0}{\pi}\right)$
$\frac{\pi}{18} \le \beta_0 < \frac{\pi}{12}$	$173.61\exp\left(\frac{-21.168\beta_0}{\pi}\right)$
$\frac{\pi}{12} \le \beta_0 < \frac{\pi}{10}$	$80.523\exp\left(\frac{-11.952\beta_0}{\pi}\right)$
$\frac{\pi}{10} \le \beta_0$	$1 + \frac{\pi^2}{4}\cot^2\beta_0$

Table 4.8.2-8 Coefficients $C_{FB3}, C_{FB4}, C_{FB5}$, and C_{FB6}

C_{FB3}	$(4.40C_{FB7} - 6.31)C_{FB8}$
C_{FB4}	$0.095C_{FB7} + 0.191C_{FB9} - 0.127$
C_{FB5}	$\left(\frac{11.8}{C_{FB7} - 0.459} + 4.96\right){C_{FB8}}^2$
C_{FB6}	$(-0.629C_{FB9} + 0.338)C_{FB7} + 0.666C_{FB9} - 0.109$

Notes:

C_{FB7}: As given by the following formula, but to be greater than 0.6

$$C_{FB7} = \frac{2x}{L_C} - 1$$

C_{FB8}: As given by the following formula, but to be greater than 0

$$C_{FB8} = \frac{2(z - T_{SC})}{L_C}$$

C_{FB9}: As given by the following formula:

$$C_{FB9} = \frac{0.36V}{\sqrt{L_C g}}$$

2 For ships where L_C is not less than 250 m and C_B is not less than 0.8, the bow impact pressure P_{FB2} (kN/m^2) specified in **Table 4.8.2-9** is to be considered.

Table 4.8.2-9 Bow Impact Pressure P_{FB2}

Positions under consideration	Bow impact pressure P_{FB2} (kN/m^2)
Positions forward of $0.1L_C$ from the forward perpendicular and positions above the minimum design ballast draught and forecastle	$P_{FB2} = \rho f_{FB} c_{FB} {V_{im}}^2 \sin\gamma_{wl}$

Notes:

f_{FB}: Coefficient for bow flare impact pressure distribution in the longitudinal direction, as given by the following formulae:

For $x/L_C \leq 0.9, f_{FB} = 0.55$

For $0.9 < x/L_C \leq 0.9875, f_{FB} = 4(x/L_C - 0.9) + 0.55$

For $0.9875 < x/L_C \leq 1.0, f_{FB} = 8(x/L_C - 0.9875) + 0.9$

For $1.0 < x/L_C, f_{FB} = 1.0$

V_{im}: Impact speed (*knot*), as given by the following formula:

$$V_{im} = 0.514V_{ref}\sin\alpha_{wl} + \sqrt{L_C}$$

V_{ref}: Forward speed (*knot*) , as given by the following formula, but not to be less than 10

$$V_{ref} = 0.75V$$

α_{wl}: Local waterline angle (*rad*) at the position under consideration, but not to be less than 0.611 (*See* **Fig. 4.8.2-3**)

γ_{wl}: Local bow impact angle (*rad*), measured in a vertical plane containing the normal to the outer shell, from the horizontal to the tangent line at the position under consideration, but not less than 0.873 (*See* **Fig. 4.8.2-3**). Where this value is not available, it may be taken as:

$$\gamma_{wl} = \arctan\left(\frac{\tan\beta_{pl}}{\cos\alpha_{wl}}\right)$$

β_{pl}:Local body plan angle (*rad*) at the position under consideration from the horizontal to the tangent line of the outer shell, but not less than 0.611

c_{FB}: Coefficient, as given by the following formulae:

For positions between draughts T_{BAL} and T_{sc}, $c_{FB} = 1.0$

For positions above draught T_{SC}, $c_{FB} = \sqrt{1.0 + \cos^2\left[\frac{(h_{fb} - 2h_0)\pi}{2h_{fb}}\right]}$

h_{fb}: Vertical distance (m) from the draught T_{SC} to the highest deck at side (*See* **Fig. 4.8.2-3**)

h_0: Vertical distance (m) from the draught T_{SC} to the position under consideration (*See* **Fig. 4.8.2-3**)

Fig. 4.8.2-3 Definitions of Bow Geometry (Bow Inclination Angle)

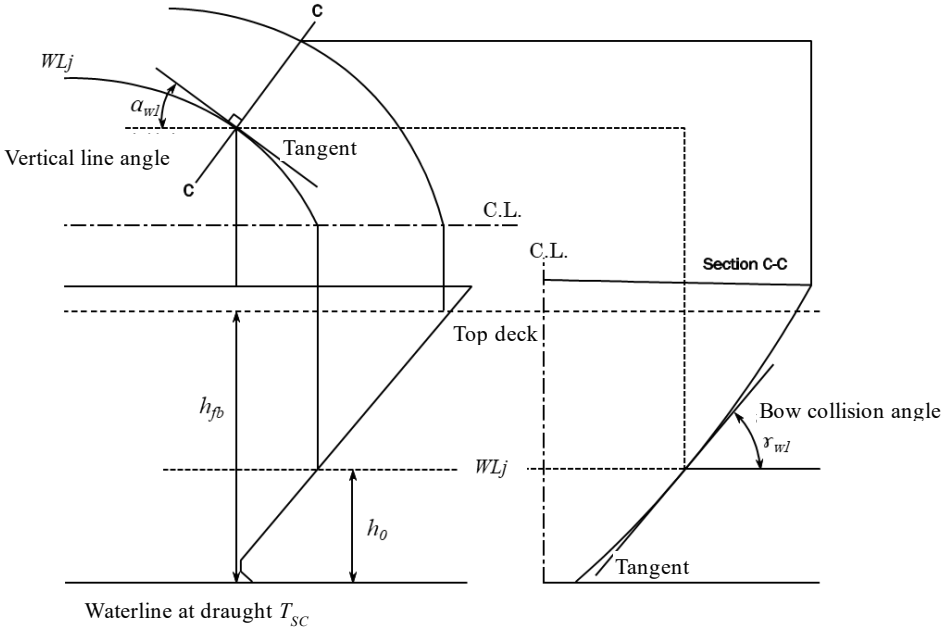

4.8.2.4 Sloshing Loads

1 Loads to be considered in tank structures for the sloshing specified in **10.9** are to be in accordance with **4.8.2.4**. The sloshing loads to be considered for filling ratios are to be in accordance with **Table 4.8.2-10**. These requirements apply to tank structures where the ratio of tank height to tank length is not less than 1/4 and not more than 4.0 for sloshing loads due to pitch, and where the ratio of tank height to tank breadth is not less than 1/4 and not more than 4.0 for sloshing loads due to roll.

2 Where the relationship between the natural period of tanks in which liquid height is considered and the natural period of ship motions corresponds to the following **(1)** and **(2)**, sloshing loads may be partially omitted from consideration. In applying the following **(1)** and **(2)**, T_{tk-X} and T_{tk-Y} may be calculated using the tank length or breadth without considering the effects of girders and/or wash bulkheads instead of using equivalent tank length $\ell_e(m)$ or equivalent tank breadth $b_e(m)$. These natural periods of tanks are to be calculated in accordance with the following **(3)**.

(1) Where the period of longitudinal oscillation $T_{tk-X}(s)$ of cargo tanks is not within the range of ±20 % of pitch period T_{ϕ_slh} specified in **Table 4.8.2-11** and not within ±1.5 *seconds* from the same period, sloshing loads due to pitch need not be considered. In calculating T_{ϕ_slh}, the parameters for the ballast condition are to be used.

(2) Where the period of transverse oscillation $T_{tk-Y}(s)$ of cargo tanks is not within the range of ±20 % of roll period T_θ specified in **4.2.2.1** and not within ±1.5 *seconds* from the same period, sloshing loads due to roll need not be considered. In calculating T_θ, the parameters for the ballast condition are to be used.

(3) $T_{tk-X}(s)$ and $T_{tk-Y}(s)$ are to be in accordance with the following formulae. The periods of tanks are to be calculated for each 10 % of the filling ratio ($0.1f_r$).

$$T_{tk-X} = \frac{2\pi}{\sqrt{\frac{\pi}{\ell_e} \cdot g \cdot \tanh\left(\frac{\pi}{\ell_e} h_{lc}\right)}}$$

$$T_{tk-Y} = \frac{2\pi}{\sqrt{\frac{\pi}{b_e} \cdot g \cdot \tanh\left(\frac{\pi}{b_e} h_{lc}\right)}}$$

ℓ_e : Equivalent tank length (m) for calculating the natural period as specified in **Table 4.8.2-12**

b_e : Equivalent tank breadth (m) for calculating the natural period as specified in **Table 4.8.2-12**

h_{lc}: Liquid height under consideration (m)

3 Impact pressure caused by liquid cargo impacting tank boundaries and internal structures with high velocity is to be treated as sloshing loads. In this **4.8.2.4**, the impact pressure is replaced with an equivalent pressure for plates and replaced with an equivalent bending moment for stiffeners. For tanks deemed necessary by the Society, consideration of loads may be required to be based on advanced methods such as numerical analysis or model tests.

4 Sloshing loads to be considered for plate panels are to be in accordance with the following **(1)** and **(2)**.

(1) Equivalent pressures P_{slh-p} (kN/m^2) obtained in accordance with **Table 4.8.2-13** are to be considered as sloshing loads due to pitch.

(2) Equivalent pressures P_{slh-r} (kN/m^2) obtained in accordance with **Table 4.8.2-14** are to be considered as sloshing loads due to roll.

5 Sloshing loads to be considered for stiffeners are to be in accordance with the following **(1)** and **(2)**.

(1) Where **-4** above is applied and the stiffeners are attached to the plate panels with $C_{slh1} = b$ and $C_{slh2} = a$ (stiffeners in parallel to the direction a), the equivalent bending moments specified in the following formulae $M_{slh-p}$and M_{slh-r} (kN-m) are to be considered.

$M_{slh-p} = F_{slh-p}\ell_{slh}$ for sloshing loads due to pitch

$M_{slh-r} = F_{slh-r}\ell_{slh}$ for sloshing loads due to roll

F_{slh-p}, F_{slh-r}: As specified in **-4** above

ℓ_{slh}: Equivalent lever (m), to be taken as:

$\ell_{slh} = f_{bd}\ell_{bdg}$

f_{bd}: Coefficient considering boundary conditions, as specified in **Table 4.8.2-16**

ℓ_{bdg}: Effective bending span (m) of stiffeners, as specified in **3.6.1.2**

(2) Where **-4** above is applied and the stiffeners are attached to the plate panels with $C_{slh1} = a$ and $C_{slh2} = b$ (stiffeners in parallel to the direction a), the equivalent bending moments specified in the following formulae $M_{slh-p}$and M_{slh-r} (kN-m) are to be considered.

$M_{slh-p} = 0.083 \cdot F_{slh-p} \cdot \ell_{bdg}$ for sloshing loads due to pitch

$M_{slh-r} = 0.083 \cdot F_{slh-r} \cdot \ell_{bdg}$ for sloshing loads due to roll

F_{slh-p}, F_{slh-r}: As specified in **-4** above

ℓ_{bdg}: As specified in **(1)** above

6 For vertically corrugated bulkheads, in addition to the requirements of **-4** above, the equivalent bending moments $M_{slh-p}$and M_{slh-r} obtained from the following formulae are to be considered as loads (kN-m) for obtaining the section modulus.

$M_{slh-p} = F_{slh-p}\ell_{slh}$ for sloshing loads due to pitch

$M_{slh-r} = F_{slh-r}\ell_{slh}$ for sloshing loads due to pitch

F_{slh-p}, F_{slh-r}: As specified in **-5** above. The value of C_{slh1} is to be the value of 1/2 pitch (mm) specified in **7.2.7.2**.

ℓ_{slh}: Equivalent lever (m), to be taken as:

$\ell_{slh} = f_{bd}\ell$

f_{bd}: Coefficient considering boundary conditions, as specified in **Table 4.8.2-16**

ℓ: Bending span (m) of corrugated bulkheads, as specified in **7.2.7.3**

7 Hull girder load (kN-m) to be considered in longitudinal members is to be in accordance with absolute value of the following formulae, whichever is greater.

$M_{V-HG} = M_{SV_max} + C_{slh-V}M_{WV-h}$

$M_{V-HG} = M_{SV_min} + C_{slh-V}M_{WV-s}$

M_{SV_max}: Permissible maximum vertical still water bending moment (kN-m) specified in **4.3.2.2**

M_{SV_min}: Permissible minimum vertical still water bending moment (kN-m) specified in **4.3.2.2**

M_{WV-h}: Vertical wave bending moment (kN-m) in the hogging condition, to be taken as:

$M_{WV-h} = 0.19C_1C_2{L_C}^2BC_{B1}$

M_{WV-s}: Vertical wave bending moment (kN-m) in the sagging condition, to be taken as:

$M_{WV-s} = -0.11C_1C_2{L_C}^2B(C_{B1} + 0.7)$

C_2: As specified in **Table 4.4.2-14**. Intermediate vales are to be linear interpolation.

C_{slh-V}: 0.5 for sloshing loads due to pitch, 0.2 for sloshing loads due to roll

Table 4.8.2-10 Filling Ratios and Sloshing Loads

Filling ratio f_r	Sloshing load
$0.2 \le f_r < 0.4$	Sloshing loads for low filling ratio
$0.4 \le f_r < 0.7$	Sloshing loads for middle filling ratio
$0.7 \le f_r \le 0.9$	Sloshing loads for high filling ratio

Notes:

f_r : Filling ratio of liquid cargo tanks, as given by the following formula:

$f_r = h_{lc}/h_{tk}$

h_{lc}: Liquid height under consideration (m)

h_{tk}: Maximum tank height (m)

Table 4.8.2-11 Pitch Period and Angular Acceleration to be Considered for Sloshing

Period (s)	Pitch angular acceleration (rad/s^2)
$T_{\phi_slh} = 2\pi\sqrt{\dfrac{L_C B T_{LC} C_{B_LC} K_{yy}{}^2 + A_\phi}{g L_c{}^3 B\left(2.2 C_{W_LC}{}^2 - 1.8 C_{W_LC} + 0.6\right)/12}}$	$a_{5_slh} = \phi_{slh60}\left(\dfrac{2\pi}{T_{\phi_{slh}}}\right)^2$

Notes:

Ballast condition is considered.

K_{yy}: Radius of gyration (m) around Y-axis, to be taken as:

$K_{yy} = 0.25 L_c$

A_ϕ: Added moment of inertia of pitch, to be taken as:

$$A_\phi = \frac{\pi L_C{}^3 B^2 C_{W_LC}{}^2}{48\left(3 - 2C_{W_LC}\right)\left(3 - C_{W_LC}\right)}\left(-1.8\frac{T_{LC}}{L_C} + 0.835\right)$$

ϕ_{slh60}: Maximum pitch angle (rad) under wave angle of 60 deg, to be taken as:

$\phi_{slh60} = \left(0.037 T_{LC}{}^{0.91} + 0.11\right)\phi$

ϕ : Pitch angle (rad), as specified in **Table 4.2.2-2**

Table 4.8.2-12 Equivalent Tank Length and Equivalent Tank Breadth

	ℓ_e and b_e
Equivalent tank length	$\ell_e = \dfrac{(1 + n_{WT}\,\alpha_{WT})(1 + f_{wf}\,\alpha_{wf})}{(1 + n_{WT})(1 + f_{wf})}\ell_{tk-h}$
Equivalent tank breadth	$b_e = \dfrac{(1 + n_{WL}\,\alpha_{WL})(1 + f_{grd}\,\alpha_{grd})}{(1 + n_{WL})(1 + f_{grd})}b_{tk-h}$

Notes:

n_{WT}: Number of transverse wash bulkheads in tanks under consideration

n_{WL}: Number of longitudinal wash bulkheads in tanks under consideration

α_{WT}: Coefficient related to transverse wash bulkheads, to be taken as[1] (*See* **Fig. 4.8.2-4**):

$$\alpha_{WT} = \frac{A_{OWT}}{A_{tk-t-h}}$$

A_{OWT}: Total area of opening (m^2) in transverse section in way of the wash bulkhead below the liquid height under consideration h_{lc}

A_{tk-t-h}: Total transverse cross sectional area of the tank (m^2) below the liquid height under consideration h_{lc}

α_{WL}: Coefficient related to longitudinal wash bulkheads, to be taken as[2]:

$$\alpha_{WL} = \frac{A_{OWL}}{A_{tk-l-h}}$$

A_{OWL}: Total area of opening (m^2) in longitudinal section in way of the wash bulkhead below the liquid height under consideration h_{lc}

A_{tk-l-h}: Total longitudinal cross sectional area of the tank (m^2) below the liquid height under consideration h_{lc}

α_{wf}: Coefficient related to transverse girders, to be taken as[3] (*See* **Fig. 4.8.2-4**):

$$\alpha_{wf} = \frac{A_{O-wf-h}}{A_{tk-t-h}}$$

A_{O-wf-h} : Total area of opening (m^2) in the transverse section in way of girders below the liquid height under consideration h_{lc}

α_{grd}: Coefficient related to longitudinal girders, to be taken as[4]:

$$\alpha_{grd} = \frac{A_{O-grd-h}}{A_{tk-l-h}}$$

$A_{O-grd-h}$: Total area of opening (m^2) in the longitudinal section in way of girders below the liquid height under consideration h_{lc}

f_{wf}: Coefficient to consider the number of transverse girders and wash bulkheads in the tank, to be taken as:

$$f_{wf} = \frac{n_{wf}}{1 + n_{WT}}$$

n_{wf}: Number of transverse girders, excluding wash bulkheads, in the tank

f_{grd}: Coefficient to consider the number of longitudinal girders and wash bulkheads in tanks, to be taken as:

$$f_{grd} = \frac{n_{grd}}{1 + n_{WL}}$$

n_{grd}: Number of longitudinal girders, excluding wash bulkheads, in the tank

ℓ_{tk-h}: Maximum value of tank length at the liquid height h_{lc} (m)

b_{tk-h}: Maximum value of tank breadth at the liquid height h_{lc} (m)

(1) For tanks whose shape changes along their length and/or with transverse wash bulkheads of different shapes, α_{WT} is to be taken as the average of all transverse wash bulkheads in the tank, as given by the following formula:

$$\alpha_{WT} = \frac{\sum_{i=1}^{n_{WT}} \frac{A_{OWT_i}}{A_{tk-t-h_i}}}{n_{WT}}$$

(2) For tanks whose shape changes along their breadth and/or with longitudinal wash bulkheads of different shapes, α_{WL} is to be taken as the average of all longitudinal wash bulkheads in the tank, as given by the following formula:

$$\alpha_{WL} = \frac{\sum_{i=1}^{n_{WL}} \frac{A_{OWL_i}}{A_{tk-l-h_i}}}{n_{WL}}$$

(3) For tanks whose shape changes along their length and/or with transverse girders of different shapes, α_{wf} is to be taken as the average of all transverse girders in the tank, as given by the following formula:

$$\alpha_{wf} = \frac{\sum_{i=1}^{n_{wf}} \frac{A_{O-wf-h_i}}{A_{tk-t-h_i}}}{n_{wf}}$$

(4) For tanks whose shape changes shape along their breadth and/or with longitudinal girders of different shape, α_{grd} is to be taken as the average of all longitudinal girders in the tank, as given by the following formula:

$$\alpha_{grd} = \frac{\sum_{i=1}^{n_{grd}} \frac{A_{O-grd-h_i}}{A_{tk-l-h_i}}}{n_{grd}}$$

Fig. 4.8.2-4 Coefficients for Wash Bulkheads and Girders

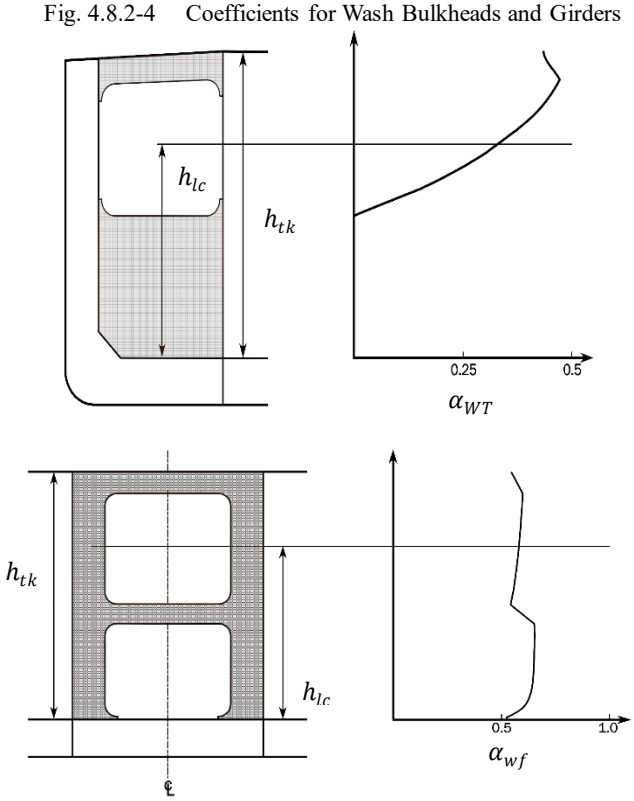

Table 4.8.2-13 Equivalent Pressure for Plate Panels and Sloshing Loads Due to Pitch

Relevant ship motion	Equivalent pressure (kN/m^2)
Pitch	$P_{slh-p} = \frac{F_{slh-p}}{C_{slh1} \cdot \min(1000, C_{slh2})} \cdot 10^6$

Notes:

C_{slh1}, C_{slh2}: Coefficients related to member and panel length depending on the type of stiffened system, to be taken as:

$C_{slh1} = b$, $C_{slh2} = a$ for plate panels of stiffened system A

$C_{slh1} = a$, $C_{slh2} = b$ for plate panels of stiffened system B

$C_{slh1} = b_f$ or b_w, $C_{slh2} = l$ for vertically corrugated bulkheads

Stiffened system A [(1)]: Transverse bulkheads, transverse wash bulkheads, front and aft walls of tanks with vertically stiffened systems; vertical girders of vertically stiffened systems attached to longitudinal bulkheads or tank side walls; tank top plates of longitudinally stiffened systems; horizontal girders stiffened in parallel to depth direction of webs which are attached to transverse bulkheads or transverse wash bulkheads or front and aft walls of tanks

Stiffened system B[(2)]: Transverse bulkheads, transverse wash bulkheads, front and aft walls of tanks with horizontally stiffened systems; vertical girders of horizontally stiffened systems attached to longitudinal bulkheads or tank side walls; tank top plates of transverse stiffened systems; horizontal girders in perpendicular to depth direction of webs which are attached to transverse bulkheads or transverse wash bulkheads or front and aft walls of tanks; cross-ties in transverse direction

a: Length (mm) of the longer side of the plate panel

b: Length (mm) of the shorter side of the plate panel

b_f, b_w: Width (mm) of the flange and web of corrugated bulkheads respectively, as specified in **10.9.2.1**

θ: Angle (rad) of corrugated bulkheads, as specified in **10.9.2.1**

l: Height (mm) of corrugated bulkheads, as specified in **7.2.7.3**

F_{slh-p}: Equivalent impact force (kN), to be taken as:

$$F_{slh-p} = \rho_L \cdot C_{slh1} \cdot \ell_{tk}{}^{1.5} \cdot C_d \cdot C_{SS} \cdot a_{5_slh} \cdot C_{slh3} \cdot 10^{-3}$$

ρ_L: Maximum design cargo density (t/m^3) in considered h_{lc}. **Table 4.4.2-6** may be applied correspondingly.

ℓ_{tk}: Maximum tank length (m)

C_d: Coefficient depending on aspect ratio of the tank, as given by the following formula:

$$C_d = 0.65 + 0.35 \tanh\left(4 - \frac{1.5\ell_{tk}}{h_{tk}}\right)$$

h_{tk}: Maximum tank height (m)

C_{SS}: Coefficient, as given by the following formula:

$$C_{SS} = \min\left(0.3 + \frac{L_C}{325}, 1.0\right)$$

a_{5_slh}: Pitch angular acceleration (rad/s^2), as specified in **Table 4.8.2-11**. The parameters for the ballast condition are to be used.

C_{slh3}: Coefficient related to members under consideration and the distance from the centre of gravity of the ship to the tank, to be taken as:

$$C_{slh3} = C_{h1}(0.0104|x_{TG} - x_G| + 1.0)$$

C_{h1} : Parameter depending on h_{lc}, as specified in **Table 4.8.2-15**.

x_{TG} : X coordinate (m) at the volumetric centre of gravity of the tank under consideration

x_G : X coordinate (m) at the centre of gravity of the ship, to be taken as $x_G = 0.45L_C$. Where deemed appropriate by the Society, the value may be defined by the designer.

(1) *See* **Fig. 10.9.3-1**

(2) *See* **Fig. 10.9.3-2**

Table 4.8.2-14 Equivalent Pressure for Plate Panels, Sloshing Load Due to Roll

Relevant ship motion	Equivalent pressure (kN/m^2)
Roll	$P_{slh-r} = \frac{F_{slh-r}}{C_{slh1} \cdot \min(1000, C_{slh2})} \cdot 10^6$

Notes:

C_{slh1}, C_{slh2}: Coefficients related to member and panel length depending on the type of stiffened system, to be taken as:

$C_{slh1} = b$, $C_{slh2} = a$ for plate panels of stiffened system A

$C_{slh1} = a$, $C_{slh2} = b$ for plate panels of stiffened system B

$C_{slh1} = b_f$ or b_w, $C_{slh2} = l$ for vertically corrugated bulkheads

Stiffened system A (1): Longitudinal bulkheads, longitudinal wash bulkheads, tank side walls with vertically stiffened systems; vertical girders of vertically stiffened systems attached to transverse bulkheads or front and aft walls of tanks; tank top plates of transverse stiffened systems; horizontal girders stiffened in parallel to depth direction of webs which are attached to longitudinal bulkheads or longitudinal wash bulkheads or front and aft walls of tanks

Stiffened system B(2): Longitudinal bulkheads, longitudinal wash bulkheads, front and aft walls of tanks with longitudinally stiffened systems; vertical girders of horizontally stiffened systems attached to transverse bulkheads or front and aft walls of tanks; tank top plates of longitudinally stiffened systems; horizontal girders stiffened in perpendicular to depth direction of webs attached to longitudinal bulkheads or longitudinal wash bulkheads or tank side walls; cross-ties in longitudinal direction

a, b, b_f, b_w, θ, l: As specified in **Table 4.8.2-13**

F_{slh-r}: Equivalent impact force (kN), to be taken as:

$F_{slh-r} = \rho_L \cdot C_{slh1} \cdot {b_{tk}}^{1.5} \cdot a_4 \cdot C_{slh3} \cdot 10^{-3}$

ρ_L: As specified in **Table 4.8.2-13**

b_{tk}: Maximum tank breadth (m)

a_4: Roll angular acceleration (rad/s^2), as specified in **4.2.3.4**. The parameters for the ballast condition are to be used.

C_{slh3}: Coefficient related to members under consideration, to be taken as:

$C_{slh3} = C_{h1}$

C_{h1} : Parameter depending on h_{lc}, as specified in **Table 4.8.2-15**

(1) *See* **Fig.10.9.3-1**

(2) *See* **Fig.10.9.3-2**

Table 4.8.2-15 Parameters for Sloshing Loads

Member to be assessed	C_{h1}		
	Low filling ratio $0.2 \le f_r < 0.4$	Middle filling ratio $0.4 \le f_r < 0.7$	High filling ratio $0.7 \le f_r \le 0.9$
- Front and aft walls / side walls of tanks - Transverse bulkheads / longitudinal bulkheads (including corrugated bulkheads)	8.63	16.1	22.3
- Transverse wash bulkheads - Longitudinal wash bulkheads	3.23	4.61	4.22
- Tank top plates(1)	1.18	11.0	8.63
- Vertical girders attached to front and aft walls / side walls of tanks - Vertical girders attached to longitudinal bulkheads / transverse bulkheads	3.63	6.28	4.80
- Horizontal girders attached to front and aft walls / side walls of tanks - Horizontal girders attached to longitudinal bulkheads / transverse bulkheads	For $h_{hg} \le 0.5$, $3.14h_{hg}$+0.68 For $h_{hg} > 0.5$, -$1.37h_{hg}$+2.935	For $h_{hg} \le 0.5$, $1.57h_{hg}$+0.20 For $h_{hg} > 0.5$, -$0.39h_{hg}$+1.18	$0.88h_{hg}$+0.10
- Cross-ties	3.24	4.61	4.22
- Sloping plates above side walls(2)	*NA*	$\alpha = 0$:11.0 $\alpha = 30$:1.97 $\alpha = 90$:16.0	$\alpha = 0$:8.63 $\alpha = 30$:3.92 $\alpha = 90$:22.3
- Sloping plates below side walls(2)	$\alpha = 0$:5.89 $\alpha = 30$:5.89 $\alpha = 90$:8.63	$\alpha = 0$:4.91 $\alpha = 30$:4.91 $\alpha = 90$:16.1	*NA*

Notes:

f_r: Filling ratio of liquid cargo tank, as specified in **Table 4.8.2-10**.

α: Acute angle (*deg*) of inclination angle to the horizontal plane of the panel under consideration

h_{hg}: Ratio of the distance (m) from tank bottom plate to the horizontal girders under consideration to maximum tank height h_{tk} (m)

(1) The parameters are for the plate panels within the range of $0.3\ell_{tk}$ from transverse bulkheads / front and aft walls of tank and within the *range* of $0.3b_{tk}$ from longitudinal bulkheads / tank side walls. Definitions of ℓ_{tk} and b_{tk} are specified in **Table 4.8.2-13** and **Table 4.8.2-14**.

(2) Intermediate values of α are to be obtained by linear interpolation.

Table 4.8.2-16 Coefficient Considering Boundary Conditions

Member	f_{bd}
- Front and aft walls / side walls of cargo tanks including corrugated walls - Transverse bulkheads / longitudinal bulkheads (including corrugated bulkheads) - Tank top plates - Sloping plates above and below side walls	0.31
- Transverse wash bulkhead, longitudinal wash bulkhead - Vertical girders attached to front and aft walls of tanks / transverse bulkheads - Vertical girders attached to tank side walls / longitudinal bulkheads	0.43
- Horizontal girders attached to front and aft walls of tanks / transverse bulkheads - Horizontal girders attached to side walls of tanks / longitudinal bulkheads	1.70
- Cross-ties	0.39

4.8.3 Helicopter Load

4.8.3.1

The helicopter loads acting on helicopter decks and helicopter landing area are to be in accordance with **3.2.7-1(1), Part P**.

4.9 Loads to be Considered in Structures other than Cargo Region

4.9.1 General

4.9.1.1 General

1 Loads to be considered in the requirements for structures outside cargo region in **Chapter 11** are to be as specified in this **4.9**.

2 Loads in the maximum load condition are to be in accordance with **4.9.2**.

4.9.2 Maximum Load Condition

4.9.2.1 General

1 Green sea pressure acting on the superstructure end bulkheads and boundary walls of deckhouse is to be in accordance with **4.9.2.2**.

2 Loads acting on the superstructure above the freeboard deck, deck of the deckhouse, etc. are to be in accordance with **4.9.2.3**.

4.9.2.2 Green Sea Pressure Acting on Superstructure End Bulkheads and Boundary Walls of Deckhouse

1 Green sea pressure P_{GW} (kN/m^2) acting on the superstructure end bulkhead and boundary walls of the deckhouse is to be in accordance with the following **(1)** and **(2)**.

(1) P_{GW} is to be not less than the value given by the following formula:

$ac[bf - (z - T_{SC})]$

a: As given by the formulae in **Table 4.9.2-1** depending on the type of bulkhead

b: As given by the following formulae:

For $x_1/L_C < 0.45, 1.0 + \left(\frac{0.45 - x_1/L_C}{C_{B2} + 0.2}\right)^2$

For $x_1/L_C \geq 0.45, 1.0 + 1.5\left(\frac{x_1/L_C - 0.45}{C_{B2} + 0.2}\right)^2$

x_1: Distance (m) from the bulkhead or boundary wall to the aft perpendicular, or distance from the mid-point of the side wall to the aft perpendicular. However, where the length of the side wall exceeds $0.15L_C$, the side wall is to be equally subdivided into spans not exceeding $0.15L_C$ and the distance from the mid-point of the subdivisions to the aft

perpendicular is to be taken.

f: As specified in 4.4.2.8

c: As given by the following formulae:

For superstructure end bulkheads, $c = 1.0$

For boundary walls of deckhouse, $c = \max\left(0.475, 0.3 + 0.7\frac{b'}{B'}\right)$

b' : Breadth (m) of deckhouse at the position under consideration

B' : Breadth (m) of ship on the exposed deck at the position under consideration

z: Z coordinate (m) at the position under consideration, at the mid-point of the span of stiffeners when determining the scantlings of stiffeners, and at the mid-point of the plating when determining the thickness of bulkhead and boundary wall plating.

(2) Notwithstanding the requirements in **(1)** above, P_{GW} is not to be less than the value given by the formulae in Table 4.9.2-2.

Table 4.9.2-1 Value of a

Type of bulkhead	a
Exposed front bulkhead/wall of the first tier superstructure/deckhouse	$20 + \frac{L_{C300}}{12}$
Exposed front bulkhead/wall of the second tier superstructure/deckhouse	$10 + \frac{L_{C300}}{12}$
Exposed front bulkhead of the third tier superstructure and protected front bulkhead Exposed front wall of the third tier deckhouse, side walls and protected front walls	$5 + \frac{L_{C300}}{15}$
Aft bulkheads/walls located abaft the midship	$7 + \frac{L_{C300}}{100} - 8\frac{x_1}{L_C}$
Aft bulkheads/walls located afore the midship	$5 + \frac{L_{C300}}{100} - 4\frac{x_1}{L_C}$

Table 4.9.2-2 Minimum Value of P_{GW} (kN/m^2)

	Exposed front bulkhead/wall of the first tier superstructure/deckhouse	Others
$L_C \leq 250$	$25 + L_C/10$	$12.5 + L_C/20$
$L_C > 250$	50	25

2 In the application of **-1** above, an exposed deck may be regarded as shown in the following **(1)** to **(3)** in relation to the vertical distance H_D (m) from an assumed freeboard deck to the exposed deck at the side. The standard height of superstructure h_S (m) is in accordance with 1.4.3.3.

(1) For $h_S \leq H_D < 2h_S$: Superstructure deck of first tier above the freeboard deck

(2) For $2h_S \leq H_D < 3h_S$: Superstructure deck of second tier above the freeboard deck

(3) For $3h_S \leq H_D$: Superstructure deck of third tier above the freeboard deck

4.9.2.3 Green Sea Pressure and Vertical Bending Moment Acting on Superstructure, Deckhouse Deck, Etc. in way of Freeboard Deck

Green sea pressure specified in 4.4.2 and 4.5.2 is to be considered.

4.9.2.4 Pressure Acting on Superstructure Decks and Tops of Deckhouses in Accommodation or Navigation Spaces

On the first and second enclosed superstructure decks and tops of deckhouses in accommodation or navigation spaces above the freeboard deck, the pressure is to be 12.8 (kN/m^2).

4.10 Loads to be Considered in Equipment

4.10.1 General

4.10.1.1 General

1 Loads to be considered in the requirements for hatch covers, etc., in **14.6** are to be in accordance with this **4.10**.

2 In the application of the requirements in this **4.10**, the positions of exposed deck openings (Position I, Position II, etc.) are to be as specified in **1.4.3.2**.

3 Loads to be considered in strength assessments of steel hatch covers, steel pontoon covers, and hatch coamings are to be in accordance with **4.10.2**.

4 Loads to be considered in strength assessments of steel hatch covers and hatch coamings of the hatchway of ballast holds are to be in accordance with **4.10.3**.

5 Loads to be considered in the strength assessments of closing arrangements are to be in accordance with **4.10.4**.

6 Loads to be considered in the strength assessments of hatch cover supports stoppers, and supporting structures are to be in accordance with **4.10.5**.

4.10.1.2 Definition

The definitions of the terms used in the requirements of **4.10** are defined in **14.6.1.2**.

4.10.2 Loads to be Considered in Strength Assessment of Steel Hatch Covers, Steel Pontoon Covers, and Hatch Coamings

4.10.2.1 Vertical Wave Load

1 Vertical wave load P_{HC} (kN/m^2) is to be in accordance with **Table 4.10.2-1**. However, this load may not be considered simultaneously with the cargo loads specified in **4.10.2.3** and **4.10.2.4**.

2 In the application of **-1** above, the examples of Position I and Position II are to be as shown in **Figs. 4.10.2-1** and **4.10.2-2**. Where an increased freeboard is assigned, the design load for hatch covers on the actual freeboard deck may be as required for a superstructure deck. In this case, a freeboard deck which is assumed to be situated at a distance at least equal to one superstructure standard height h_s (m) below the actual freeboard deck (hereinafter referred to as "assumed freeboard deck"), is to be set such that the minimum freeboard (form freeboard) calculated from the assumed freeboard deck will not be greater than the vertical distance from the assigned full load draught to the assumed freeboard deck.

Table 4.10.2-1 Vertical Wave Load P_{HC} (kN/m^2)

		$L_f \le 100$	$L_f > 100$
Position I	For $0.25L_f$ (1) forward	$\frac{9.81}{76}\left[(4.28L_f+28)\frac{x_{Lf}}{L_f}-1.71L_f+95\right]$	For type B ships according to ICLL, $9.81\left\{(0.0296L_{f1}+3.04)\frac{x_{Lf}}{L_f}-0.0222L_{f1}+1.22\right\}$ For types B-60 and B-100 ships according ICLL, $9.81\left\{(0.1452L_{f1}-8.52)\frac{x_{Lf}}{L_f}-0.1089L_{f1}+9.89\right\}$
	Others	$\frac{9.81}{76}(1.5L_f+116)$	9.81×3.5
Position II		$\frac{9.81}{76}(1.1L_f+87.6)$	9.81×2.6 (2)

Notes:

x_{Lf}: Distance (m) of the mid length of the hatch cover from the aft end of L_f

L_{f1}: L_f (m), but to be taken as 340 when L_{f1} exceeds 340 m.

(1) For a hatchway located at least one superstructure standard height above the freeboard deck, the load for Others at Position I is to be used. For ships having an unusually large freeboard, "freeboard deck" may be read alternatively as "assumed freeboard deck."

(2) For the hatchway of an exposed superstructure deck located at least one superstructure standard height above deck Position II, P_V may be taken as 9.81×2.1 (kN/m^2).

(3) Loads on hatchways in exposed parts other than at Positions I and II are to be as deemed appropriate by the Society.

Fig. 4.10.2-1 Examples of Positions I and II

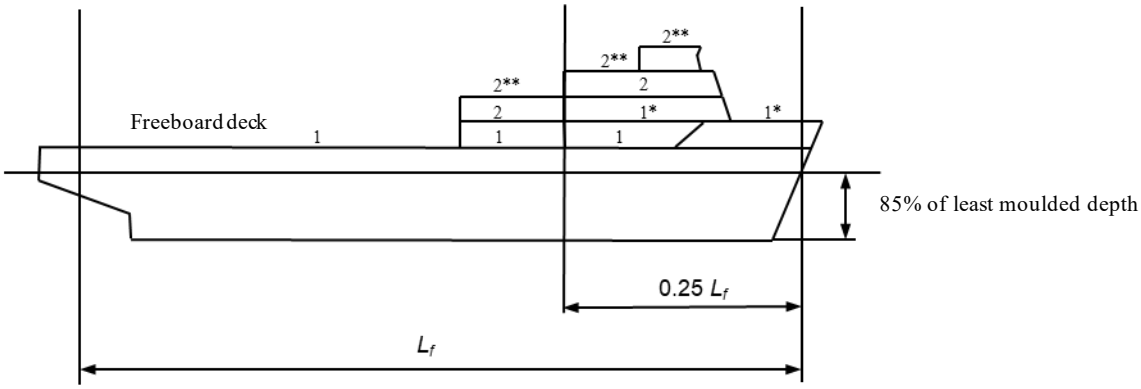

* Exposed superstructure decks located at least one superstructure standard height above the freeboard deck

** Exposed superstructure decks of vessels having freeboard length L_f greater than 100 *m* located at least one superstructure standard height above the lowest Position 2 deck

Fig. 4.10.2-2 Examples of Positions 1 and 2 with Increased Freeboards

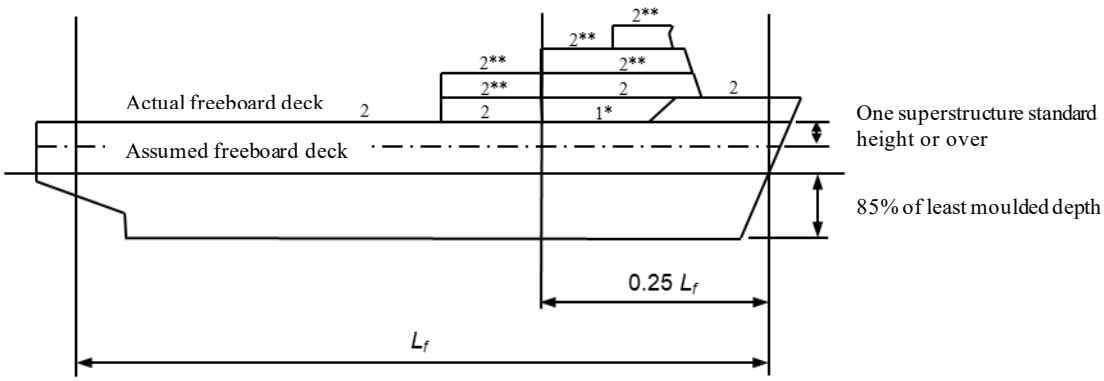

* Exposed superstructure decks located at least one superstructure standard height, above the freeboard deck

** Exposed superstructure decks of ships having freeboard length L_f greater than 100 *m* located at least one superstructure standard height above the lowest Position 2 deck

4.10.2.2 Horizontal Wave Load

1 Horizontal wave load P_A (kN/m^2) is to be obtained from the following formula. However, P_A is not to be less than the minimum values given in **Table 4.10.2-2.** P_A may not be included in strength assessments by finite element analysis for hatch covers except where structures supporting stoppers are assessed.

$$P_A = f_n f_c [f_b C_1 - (z - T_{SC})]$$

f_n: As specified in **Table 4.10.2-3**

x: X coordinate (m) of the hatch coaming or hatch cover edge member to be considered, or the respective mid-points of the side plating. However, where the length of the side plating exceeds $0.15L_C$, the side hatch coaming plates are to be equally subdivided into spans not exceeding $0.15\ L_C$ and the distance from the mid-point of the subdivisions is to be taken.

f_c: As given by the following formula:

$$f_c = \max\left(0.475, 0.3 + 0.7\frac{b_1}{B_1}\right)$$

b_1: Breadth (m) of hatch coamings at the position under consideration

B_1: Breadth (m) of ship on the exposed deck at the position under consideration

f_b: As given by the following formulae:

For $x/L_C < 0.45, f_b = 1.0 + \left(\frac{0.45 - x/L_C}{C_{B4} + 0.2}\right)^2$

For $x/L_C \geq 0.45, f_b = 1.0 + 1.5\left(\frac{x/L_C - 0.45}{C_{B4} + 0.2}\right)^2$

z: Z coordinate (m) of the position under consideration, at the mid-point of the span of the stiffeners when determining the scantlings of stiffeners, and at the mid-point of plating when determining the thickness of boundary wall plating

2 The wave load P_{coam} to be considered in strength assessments of the hatch coaming of Type 2 ships is to be in accordance with the following **(1)** or **(2)**.

(1) Front-end hatch coaming of the foremost cargo hold: 290 (kN/m^2)

However, where a forecastle is installed in accordance with the requirements of **11.1, Part 2-3**, this value may be 220 kN/m^2.

(2) Hatch coaming other than **(1)** above: 220 (kN/m^2)

Table 4.10.2-2 Minimum Values of P_A (kN/m^2)

	Unprotected front hatch coamings and front hatch cover skirt plates	Others
$L_C < 250$	$25 + \frac{L_C}{10}$	$12.5 + \frac{L_C}{20}$
$L_C \geq 250$	50	25

Table 4.10.2-3 Values of f_n

Member	f_n
Unprotected front coamings and hatch cover skirt plates	$20 + \frac{L_{C300}}{12}$
Unprotected front coamings and hatch cover skirt plates, where the distance from the actual freeboard deck to the summer load line exceeds the minimum non-corrected tabular freeboard by at least one superstructure standard height	$10 + \frac{L_{C300}}{12}$
Side and protected front coamings and hatch cover skirt plates	$5 + \frac{L_{C300}}{15}$
Aft ends of coamings and aft hatch cover skirt plates abaft amidships	$7 + \frac{L_{C300}}{100} - 8\frac{x}{L_C}$
Aft ends of coamings and aft hatch cover skirt plates forward of amidships	$5 + \frac{L_{C300}}{100} - 4\frac{x}{L_C}$

4.10.2.3 Cargo Loads

Loads due to cargoes loaded on hatch covers are to be in accordance with the following **(1)** and **(2)**. The partial loading condition is also to be considered. However, container cargo loads are to comply with **4.10.2.4**.

(1) Distributed load P_L (kN/m^2) acting on the hatch cover due to heave and pitch, without roll, is to obtained from the following formula:

$P_L = P_{Cargo}(1 + a_V)$

P_{Cargo}: Static uniform cargo load (kN/m^2)

a_V: Vertical acceleration addition, as given by the following formula:

$$a_V = \frac{0.11mV'}{\sqrt{L_C}}$$

m: As given by the following formulae:

For $0 \leq x/L_C \leq 0.2, m = m_0 - 5(m_0 - 1)\frac{x}{L_C}$

For $0.2 < x/L_C \leq 0.7, m = 1.0$

For $0.7 < x/L_C \leq 1.0, m = 1 + \frac{m_0 + 1}{0.3}\left(\frac{x}{L_C} - 0.7\right)$

m_0: As given by the following formula:

$$m_0 = 1.5 + \frac{0.11V'}{\sqrt{L_C}}$$

V' : Speed of ship (*knot*) specified in **2.1.8, Part A**. However, where V' is less than $\sqrt{L_C}$, V' is to be taken as $\sqrt{L_C}$.

x: As specified in **4.10.2.2**

(2) Point load P (kN) acting on the hatch cover due to heave and pitch, without roll, is to be obtained from the following formula:

$P = P_S(1 + a_V)$

P_S: Static point load (kN) due to cargo

a_V: As specified in **(1)** above

4.10.2.4 Container Cargo Loads

1 When containers are stowed on hatch covers, the following **(1)** to **(3)** are to be considered:

(1) Vertical supporting force A_Z and B_Z (kN) and transverse supporting force B_Y (kN) acting on each corner of a container stack due to the heave, pitch and roll motion of the ship are to be obtained from the following formulae (*See* **Fig. 4.10.2-3**). When the load case of a partially loaded container is considered, **4.10.2.4-2** is to be followed.

$$A_Z = 9.81\frac{M}{2}(1 + a_V)\left(0.45 - 0.42\frac{h_m}{b}\right)$$

$$B_Z = 9.81\frac{M}{2}(1 + a_V)\left(0.45 + 0.42\frac{h_m}{b}\right)$$

$$B_Y = 2.4M$$

M: Maximum designed mass (t) of container stack, as given by the following formula:

$$M = \sum W_i$$

W_i: Weight of i-th container

a_V: As specified in **4.10.2.3**

h_m: Design height of the centre of gravity (m) above the hatch cover top plates to be calculated by the following formula where the centre of gravity of each container is assumed to be the centre of the container:

$$h_m = \sum \frac{(z_i W_i)}{M}$$

z_i: Distance (m) from hatch cover top plate to centre of i-th container

b: Distance (m) between midpoints of foot points

(2) Application of **(1)** above is to be in accordance with the following **(a)** and **(b)**.

(a) The values of A_Z and B_Z applied for the assessment of hatch cover strength are to be shown in the drawings of the hatch covers.

(b) The value of the supporting force acting on the corner of the lowermost part of the container stack used in the calculation of cargo lashing is, in principle, not to be more than the value given by **(1)** above.

(3) Stack point load P_{stack} (kN) acting on each corner of the lowermost part of the container stack due to the heave, pitch, without roll, is to be obtained from the following formula:

$$P_{stack} = 9.81\frac{M}{4}(1 + a_V)$$

a_V: As specified in **4.10.2.3**

M: As specified in **(1)** above

2 Load of containers on hatch covers in the partial loading condition as shown in **Fig. 4.10.2-4** is to be considered. Separate investigation of other partial loading conditions than those in **Fig. 4.10.2-4** may be required where deemed necessary by the Society.

3 In the case of mixed stowage (e.g. 20-*feet* + 40-*feet* container combined stacks), the foot point loads at the fore and aft ends of the hatch cover are not to be greater than those due to the design stack weight for the 40-*foot* containers, and the foot point forces at the middle of the hatch cover are not to be greater than those due to the design stack weight for the 20-*foot* containers.

Fig. 4.10.2-3 Forces due to Container Cargo Stowed on Hatch Cover

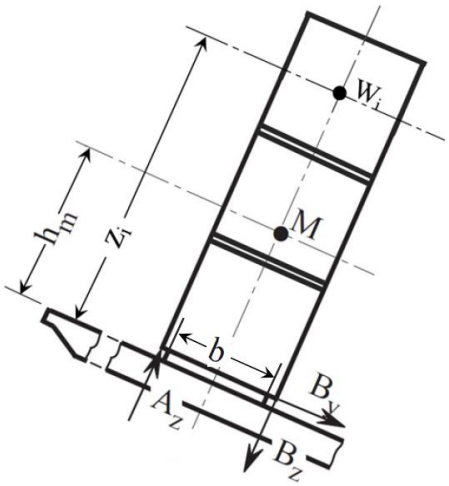

Fig. 4.10.2-4 Partial Loading of Containers on Hatch Covers

Roll direction	←	→
Hatch covers supported by the longitudinal hatch coaming with all container stacks located completely on the hatch cover	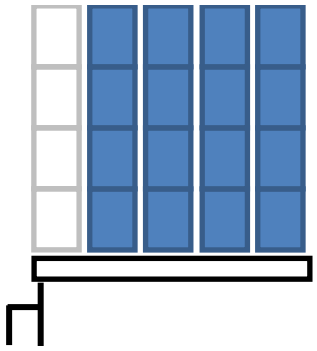	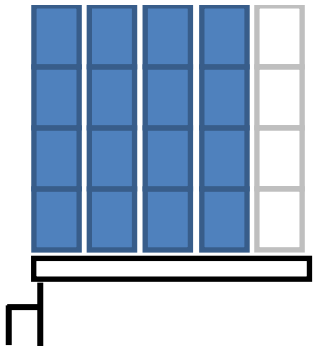
Hatch covers supported by the longitudinal hatch coaming with the outermost container stack supported partially by the hatch cover and partially by container stanchions	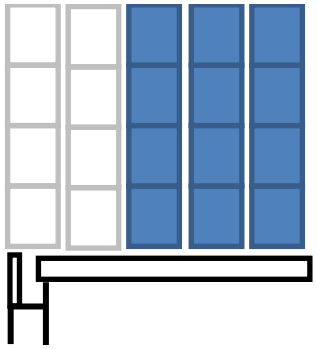	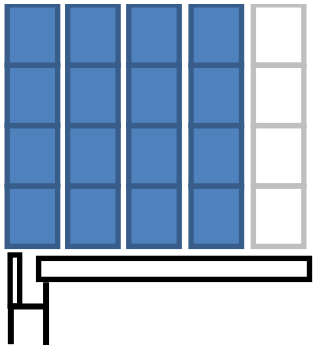
Hatch covers not supported by the longitudinal hatch coaming (centre hatch covers)	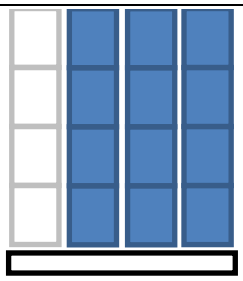	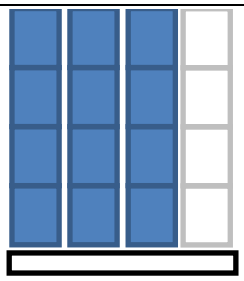

4.10.2.5 Other Loads

In addition to the loads in 4.10.2.1 to 4.10.2.4, consideration of loads due to the elastic deformation of the hull may be required in some cases.

4.10.3 Loads to be Considered in Strength Assessment of Steel Hatch Covers and Hatch Coamings of Ballast Hold Hatchways

4.10.3.1 Vertical Loads due to Ballast

1 Load h (kN/m^2) acting on the steel hatch covers of exposed parts of the upper deck provided in cargo holds which may be ballasted or similar hatch covers and hatch coamings is to be in accordance with the following:

(1) Load h (kN/m^2) acting on the top plate is to be in accordance with the following formula:

$$h = 9.81 \times 0.85\left(16a/L_C + 0.25b + h'\right)$$

a: Length (m) of hatchways

b: Breadth (m) of hatchways

h' : Vertical distance (m) to the highest point of the top plates of tanks from the highest points of hatch covers around tanks when the ship is inclined at roll angle of 15 degrees and pitch angle of $900/L_C$ degrees. In any case, h' is not to be less than 0 (*See* **Fig. 4.10.3-1**).

(2) Load h (kN/m^2) acting on stiffeners is to be in accordance with the following formulae:

For transverse direction (where hatch covers are opened/closed in the longitudinal direction),

$$h = 9.81 \times 0.85\left(12a/L_C + 0.125b + h'\right)$$

For longitudinal direction (where hatch covers are opened/closed in the transverse direction),

$$h = 9.81 \times 0.85\left(8a/L_C + 0.188b + h'\right)$$

a, b and h' : As specified in **(1)** above

2 When the scantlings of hatch covers are determined by finite element analysis, the load du to ballast water is to be 0.85 *times* the value specified in **Fig. 4.10.3-2**. However, the corner where the maximum load acts is to be an arbitrary place. Where only girders are modelled and the Society deems it appropriate, the values specified in **-1** above may be used for the load.

Fig. 4.10.3-1 Method for Measuring h'

	Roll: Angle ( ) $= 15°$	Pitch: Angle ( ) $= (900/L_C)°$
$h' > 0$	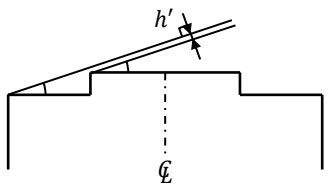	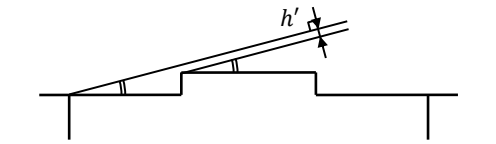
$h' \leq 0$	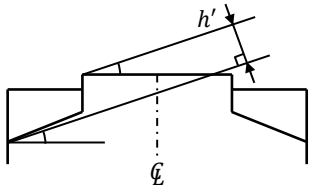	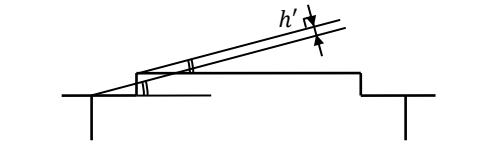

Fig. 4.10.3-2 Load Acting on Ballast Hold in Finite Element Analysis

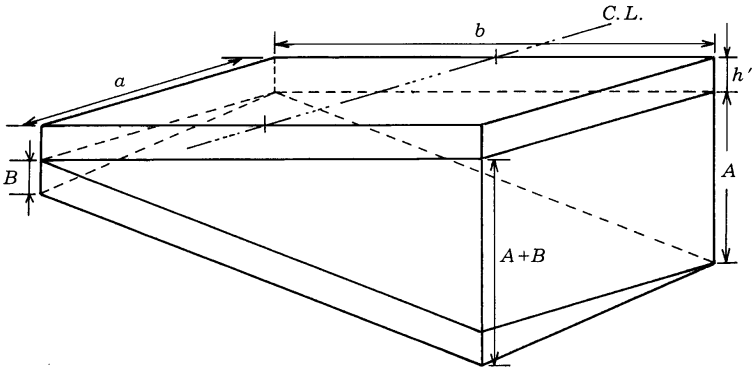

Notes:

A: Additional water head due to the roll, to be taken as $0.25b$

B: Additional water head due to the pitch, to be taken as $16\,a/L_C$

4.10.4 Loads to be Considered in Strength Assessment of Closing Arrangements

4.10.4.1 Ordinary Tightening Load

In determining the sectional area of bolts or rods used as securing devices, the line pressure p (*N/mm*) acting on the gasket is to be considered. However, if p is less than 5 *N/mm*, p is to be taken as 5 *N/mm*.

4.10.4.2 Unsymmetrical Tightening Load When Loading Cargo on Hatch Covers

The securing devices of hatch covers designed so as to prevent lifting of the hatch covers under the vertical forces acting on the hatch covers due to ship motions, are to be considered unsymmetrical loading, which may occur in practice (*See* **Fig. 4.10.4-1**). Consideration of loads under partial loading condition other than that shown in **Fig. 4.10.4-1** may also be required.

Fig. 4.10.4-1 Vertical Force acting on Hatch Cover

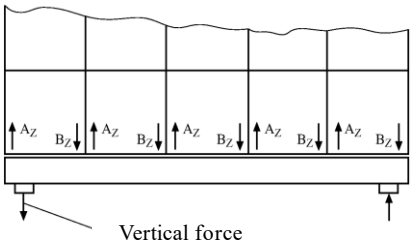

4.10.5 Loads to be Considered in Strength Assessment of Hatch Cover Supports and Stoppers

4.10.5.1 Horizontal Loads for Strength Assessment of Stopper Securing Devices

The larger of the following **(1)** and **(2)** is to be considered as the horizontal load for strength assessment of stoppers:

(1) For the design of securing devices for prevention of shifting, the horizontal forces F (*kN*) obtained from the following formula are to be considered. Acceleration in the longitudinal direction a_X (*m/s*^{2}) and in the transverse direction a_Y (*m/s*^{2}) does not need be considered as acting simultaneously.

$F = ma$

m: Sum of mass (*t*) of cargo lashed on the hatch cover and the mass of the hatch cover

a: Acceleration (*m/s*^{2}) obtained from the following formulae:

Longitudinal direction: $a_X = 0.2g$

Transverse direction $a_Y = 0.5g$

(2) P_A as specified in **4.10.2.2**

4.10.5.2 Loads Acting on Hatch Cover Supports

Loads acting on hatch cover supports are to be in accordance with the following **(1)** to **(3)**.

(1) The nominal surface pressure $P_{n\,\max}$ (*N/mm*^{2}) acting on hatch cover supports is not to be greater than that obtained from the following formulae:

$P_{n\,\max} = dP_n$, in general

$P_{n\,\max} = 3P_n$, for metallic supporting surface not subjected to relative displacements

d: As given by the following formula. Where d exceeds 3, d is to be taken as 3. However, d is not to be less than the following values depending on the loading condition:

$d = \max(3.75 - 0.015L_C, d_{\min})$

$d_{\min} = 1.0$, in General

$d_{\min} = 2.0$, for partial loading condition

P_n: As specified in **Table 4.10.5-1**

(2) When the manufacturer of the hatch cover support member material can provide proof that the material has sufficient strength for the maximum stress, not only under static loads but also under dynamic loads, the $P_{n\,max}$ specified in **(1)** above may be relaxed. However, the long-term distributions of the stresses generated by the vertical loads and relative horizontal motion between hatch covers and hatch supports are to be as deemed appropriate by the Society.

(3) Irrespective of the arrangement of stoppers, the supports are to be able to transmit the force P_h according to the following formula in the longitudinal and transverse directions:

$$P_h = \mu \frac{P_V}{\sqrt{d}}$$

P_V : Vertical supporting force acting on the members

μ : Friction coefficient generally to be taken as 0.5. For non-metallic or low-friction materials, the friction coefficient may be reduced as appropriate by the Society. However, in no case is μ to be less than 0.35.

d : As specified in **(1)** above.

Table 4.10.5-1 Permissible Nominal Surface Pressure P_n

Material	P_n	
	Vertical	Horizontal
Hull structure steel	25	40
Hardened steel	35	50
Lower friction materials	50	-

4.10.6 Wave Load to be Considered in Strength Assessments of Stoppers

4.10.6.1

The designed wave load $P_{stopper}$ to be considered in strength assessments of stoppers of Type 2 ships is to be in accordance with the following **(1)** or **(2)**.

(1) Stoppers for the hatch cover to the foremost cargo hold

(a) Pressure acting in the direction of the stern on the front-end of the hatch cover: 230 (kN/m^2)

However, where a forecastle is installed in accordance with the requirements of **11.1, Part 2-3**, this value may be 175 kN/m^2.

(b) Pressure in the transverse direction of the ship: 175 kN/m^2

(2) Stoppers for hatch covers other than that specified in **(1)** above

Pressure acting in the direction of the stern on the front-end of the hatch cover and pressure in the transverse direction the ship: 175 kN/m^2

Annex 4.3 GUIDELINE FOR THE ASSESSMENT OF LONGITUDINAL STRENGTH RELATING TO BALLASTING/DEBALLASTING

An1. General

An1.1 General

An1.1.1 Application

This Annex provides general guidelines for the determination of loading conditions to be considered in the application of **Chapter 5** (or for container carriers subject to the requirements in **Chapter 5, Part 2-1**), for ships intended to be operated with partially filled ballast tanks during voyages and ships in which any ballasting and/or deballasting of ballast tank is intended during voyages.

An1.1.2 General Rules

1 Where a ballast tank is filled partially during the voyage, it is presumed that the hull girder bending moment will exceed the designed hull girder bending moment is still water due to difficulties on precise control of the tank level and unexpected stress will act on the hull structures. Therefore, ships intending to operate with partially filled ballast tanks are required to comply with the requirements of longitudinal strength even when filled to a level differing from the designed tank level.

2 For ships intending to ballast/deballast during the voyage, it is presumed that unexpected stress will act on hull structures according to the time when the ballasting/deballasting is conducted. Therefore, such ships are required either to be designed so as to comply with the requirements of longitudinal strength even when the ballasting/deballasting operation is conducted at anytime during the voyage or the allowable times for the ballasting/deballasting operation are to be specified.

3 Notwithstanding the requirements above, when the ship is loaded with cargo, the requirements specified in **-1** and **-2** above may apply to the peak tanks only.

An2. Guidelines for the Assessment of Longitudinal Strength

An2.1 General

An2.1.1 Loading Conditions to be Considered

1 Ships intending to operate with partially filled ballast tanks are required to be designed so as to comply with the longitudinal strength specified in **Chapter 5** (or for container carriers subject to the requirements in **Chapter 5 Part 2-1**), when the ballast tanks are full and when they are empty. For this purpose, compliance with the longitudinal strength requirements in **Chapter 5** (or for container carriers subject to the requirements in **Chapter 5, Part 2-1**) is to be assessed for just before and just after such ballasting/deballasting operation is conducted, for partially filled conditions, as well as when such ballast tanks are assumed empty or full (*See* **4.3.2.1-7**).

2 Notwithstanding the requirements of **-1** above, for large wing ballast tanks of ore carriers defined in **1.3.1(13)(b), Part B**, an examination for partially filled ballast tanks may be according to the follow:

(a) Where the ship's trim exceeds one of the following conditions when one or two pairs of these tanks are empty or have full ballast water filling levels, it is sufficient to demonstrate compliance with the maximum, minimum and intended partial filling levels of these tanks such that the ship's condition does not exceed any of these trim limits:

i) Trim by stern of 3% of the ship's length (L_C)

ii) Trim by bow of 1.5% of ship's length (L_C)

iii) Any trim that cannot maintain propeller immersion (I/D) of not less than 25%, where :

I = the distance from propeller centreline to the waterline

D = the propeller diameter (*See* **Fig. An1**)

(b) In the application of the requirements of **(a)** above, where two or more pairs of these tanks are intended to be partially filled, filling levels of all other wing ballast tanks are to be considered between empty and full.

(c) In the application of the requirements of **(a)** above, the maximum and minimum filling levels of the above mentioned pairs of side ballast tanks are to be indicated in the loading manual specified in **3.8**.

Fig. An1 Propeller Immersion

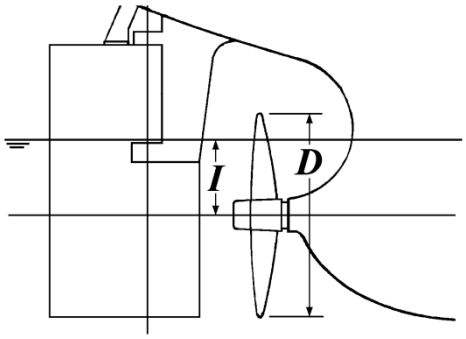

3 For ships intending to ballast/deballast during the voyage, loading conditions corresponding to all steps of the ballasting/deballasting operation are to be included in the ships' loading manuals as intermediate conditions which are part of the standard loading conditions. For this purpose, "step" is a condition just before and just after a ballasting/deballasting operation for each tank. Such intermediate conditions are to be assessed in compliance with the requirements of **Chapter 5** (or for container carriers subject to the requirements in **Chapter 5, Part 2-1**). (*See* **4.3.2.2-4** and **An1.1.1-2(1), Annex 3.8 "Items to be Included in Loading Manual"**).

4 Notwithstanding the requirements of **-3** above, if comprehensive assessment on longitudinal strength is conducted so as to obtain operational flexibility regarding when ballasting/deballasting operations area made during the voyage, the intermediate conditions specified in **-3** above may be reduced or omitted appropriately.

5 In the application of the requirements in **-3** and **-4** above, ships that have had their longitudinal strength assessed on the condition that the times when ballasting/deballasting operations may be conducted are specified or limited, are to have the time parameters for ballasting/deballasting complying with the strength criteria and appropriate instructions regarding ballasting/deballasting based on these time parameters included in the loading manual.

6 Examples of relationships between loading conditions specified in the ship's loading manuals and those for the assessment of longitudinal strength are given as the following **(1)** to **(4)**:

(1) Where no ballast tank is partially filled:

For example, when loading conditions as shown in **Fig. An2** are deemed as standard loading conditions, additional conditions are not required to be assessed.

(2) Where ballasting/deballasting operations are permitted anytime during the voyage:

For example, when the loading conditions given in **Fig. An3** are deemed as standard loading conditions, additional strength assessment is required for the conditions given in **Fig. An4**.

(3) Where ballasting/deballasting operations are permitted only at certain times during the voyage:

For example, when loading conditions as shown in **Fig. An5** are deemed as standard loading conditions and ballasting/deballasting operations are assumed to be made when the remaining consumables reach levels of 50 % and 20 %, additional conditions such in **Fig. An6** are required to be assessed.

(4) Where an ore carrier conducts ballasting/deballasting operations on 2 pairs of ballast tanks only at certain times during the voyage:

For example, when loading conditions as shown in **Fig. An7** are deemed as standard loading conditions, and ballasting/deballasting operations are assumed to be made when remaining consumables reach levels of 50 % and 20 %, in contrast to the conditions **i)** to **vi)** in **Fig. An7**, additional conditions as shown in **Fig. An8** to **Fig. An13** are required to be assessed.

Fig. An2 Loading Conditions for Strength Assessment where No Ballast Tank is Partially Filled

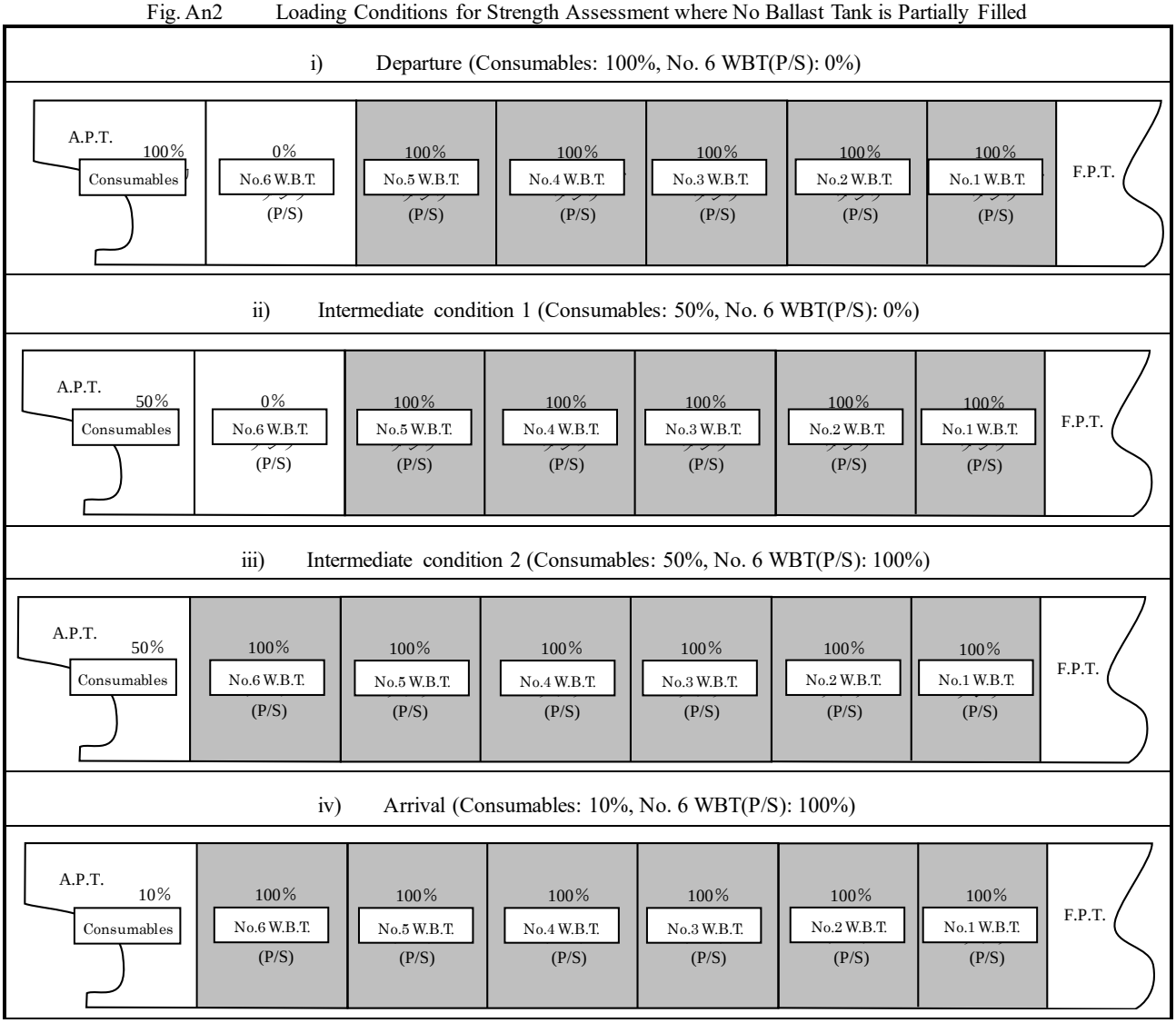

Fig. An3 Loading Conditions for Strength Assessment where Ballasting/Deballasting Operations are Permitted Anytime during the Voyage.

i) Departure (Consumables: 100%, No. 6 WBT(P/S): 0%)

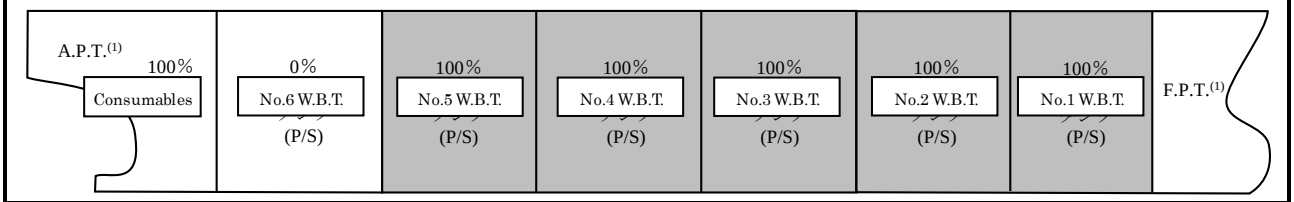

ii) Intermediate condition 1 (Consumables: 50%, No. 6 WBT(P/S): 0%)

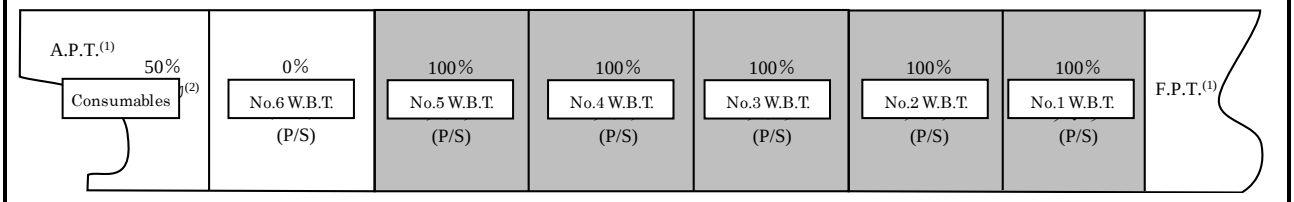

iii) Intermediate condition 2 (Consumables: 50%, No. 6 WBT(P/S): 60%)

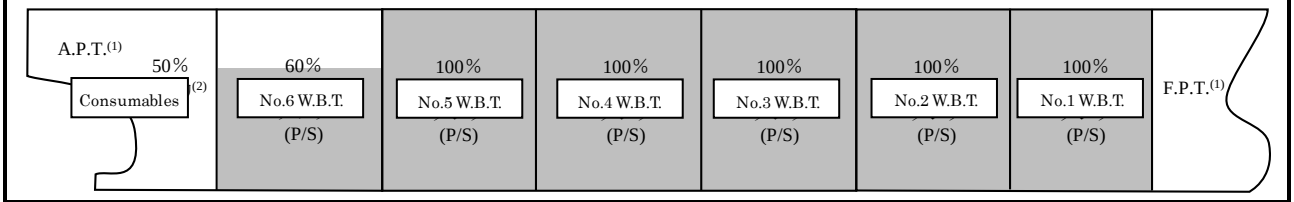

iv) Intermediate condition 3 (Consumables: 20%, No. 6 WBT(P/S): 60%)

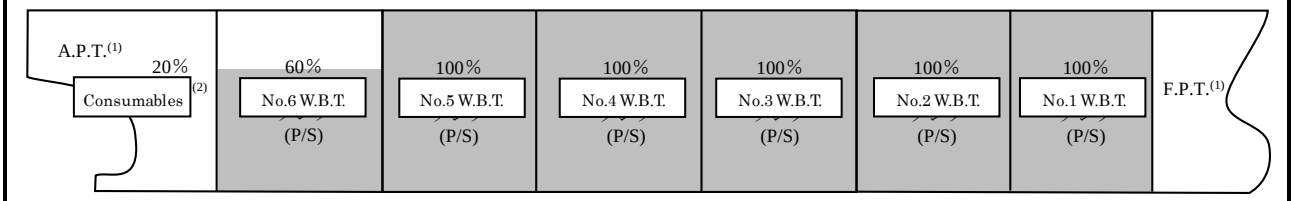

v) Intermediate condition 4 (Consumables: 20%, No. 6 WBT(P/S): 100%)

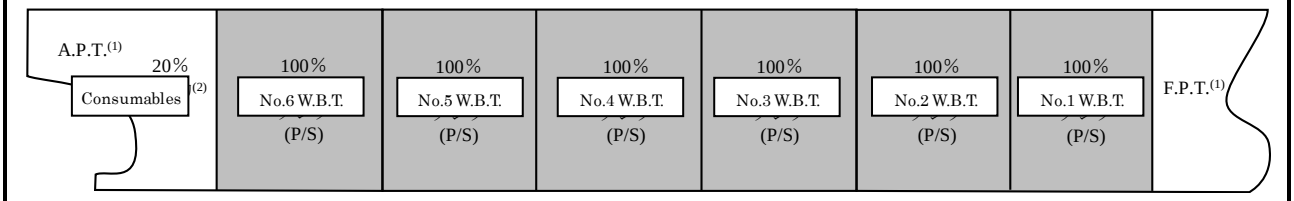

vi) Arrival (Consumables: 10%, No. 6 WBT(P/S): 100%)

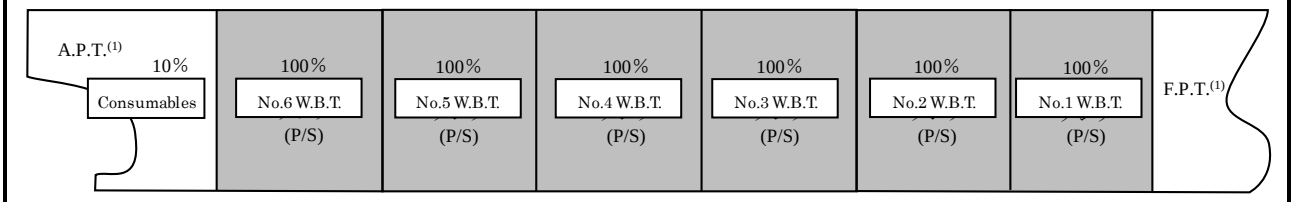

(Notes)

(3) For peak tanks intended to be partially filled, all combinations of full or partially filled at intended level for those tanks are to be investigated.

(4) The intermediate condition(s) to be specified incl. % consumables.

Fig. An4 Additional Loading Conditions for Strength Assessment

i) Departure (Consumables: 100%, No. 6 WBT(P/S): 100%)

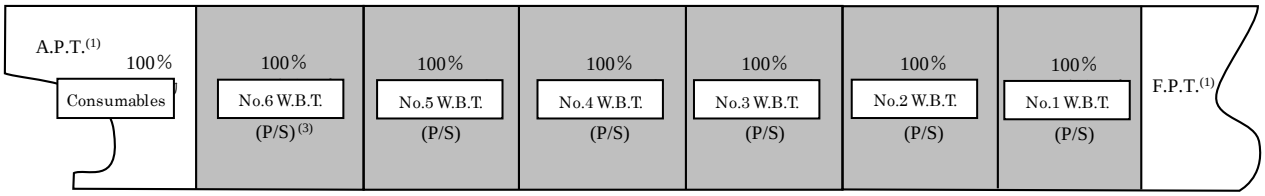

ii) Intermediate condition 1/2 (Consumables: 50%, No. 6 WBT(P/S): 100%)

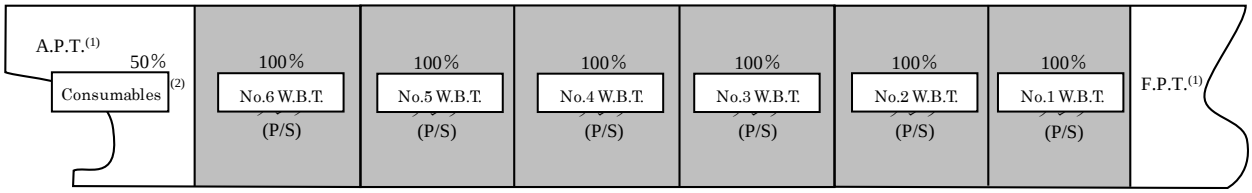

iii) Intermediate condition 3/4 (Consumables: 20%, No. 6 WBT(P/S): 0%)

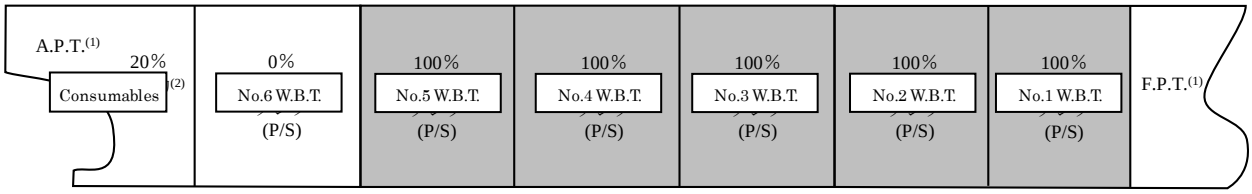

iv) Arrival (Consumables: 10%, No. 6 WBT(P/S): 0%)

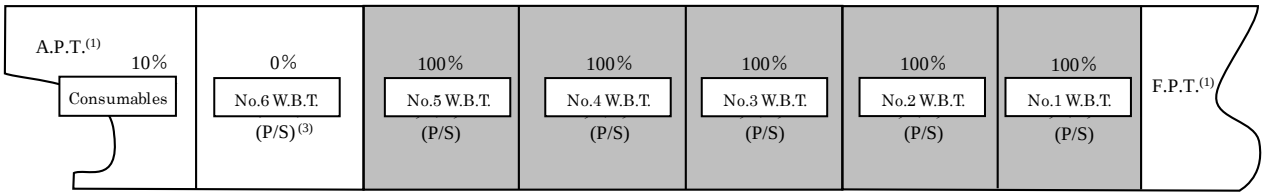

(Notes)

Conditions ii) and iii) may be guaranteed by the assessment of condition i) and iv) respectively, however it is to be determined on a case by case basis.

(1) For peak tanks intended to be partially filled, all combinations of full or partially filled at intended level for those tanks are to be investigated.

(2) The intermediate condition(s) to be specified incl. % consumables.

(3) For ore carriers defined in **1.3.1(13)(b), Part B**, an examination for partially filled ballast tanks may be according to **An2.1.1-2**.

Fig. An5 Loading Conditions for Strength Assessment where Ballasting/Deballasting Operations are Permitted Only at Certain Times during the Voyage

i) Departure (Consumables: 100%, No. 6 WBT(P/S): 0%)

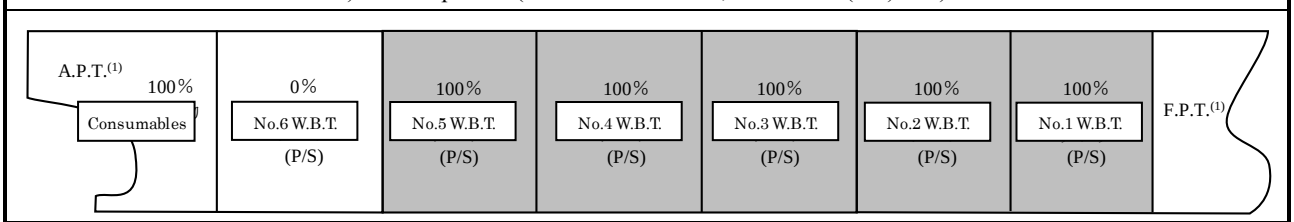

ii) Intermediate condition 1 (Consumables: 50%, No. 6 WBT(P/S): 0%)

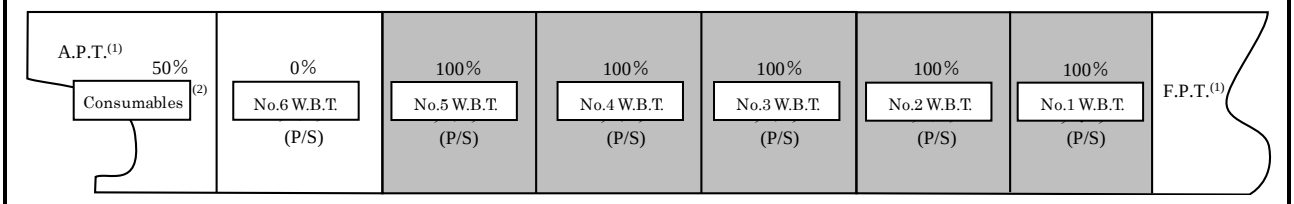

iii) Intermediate condition 2 (Consumables: 50%, No. 6 WBT(P/S): 60%)

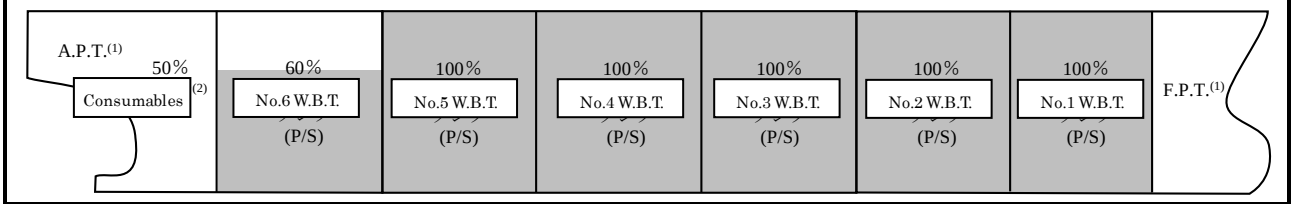

iv) Intermediate condition 3 (Consumables: 20%, No. 6 WBT(P/S): 60%)

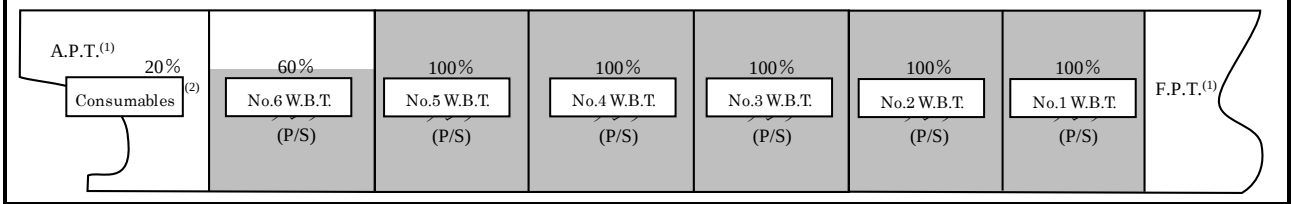

v) Intermediate condition 4 (Consumables: 20%, No. 6 WBT(P/S): 100%)

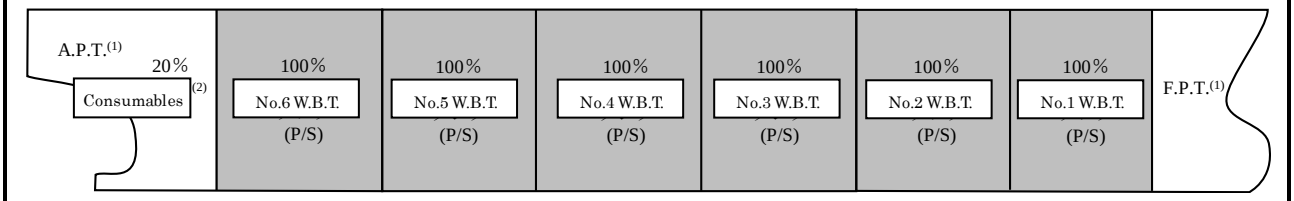

vi) Arrival (Consumables: 10%, No. 6 WBT(P/S): 100%)

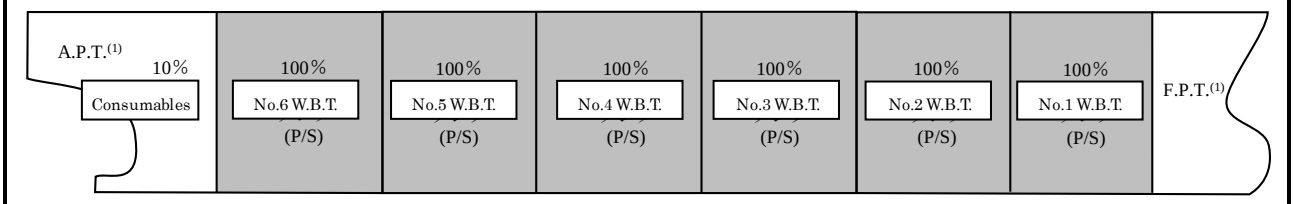

(Notes)

(1) For peak tanks intended to be partially filled, all combinations of full or partially filled at intended level for those tanks are to be investigated.

(2) The intermediate condition(s) to be specified incl. % consumables.

Fig. An6 Additional Loading Conditions for Strength Assessment

i) Intermediate condition 1/2 (Consumables: 50%, No. 6 WBT(P/S): 100%)

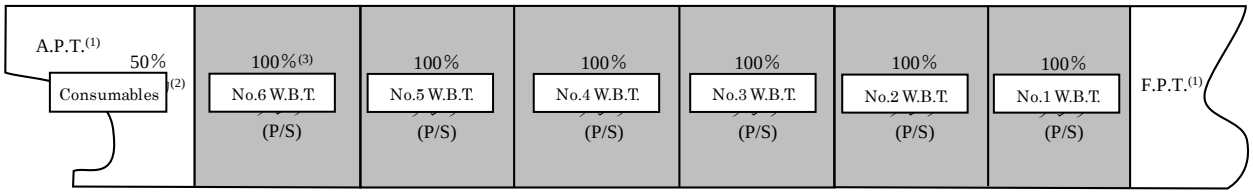

ii) Intermediate condition 3/4 (Consumables: 20%, No. 6 WBT(P/S): 0%)

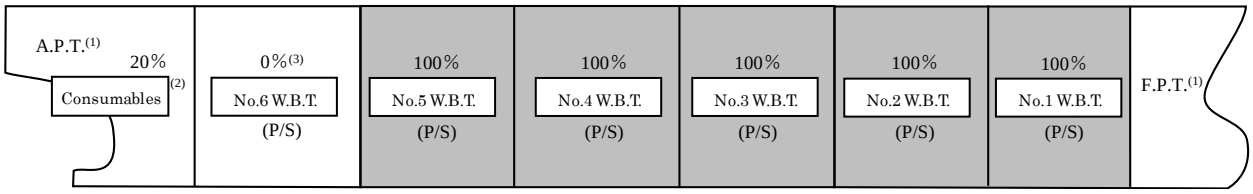

(Notes)

It is to be noted in the ship's loading manual that the timing for ballasting/deballasting is assumed to take place when the remaining consumables are at 50% and 20% for the purpose of complying with the longitudinal strength requirements and for ballasting/deballasting at other times, the longitudinal strength of the ship is to be assessed while carefully noting the filling level of the ballast tanks.

(1) For peak tanks intended to be partially filled, all combinations of full or partially filled at intended level for those tanks are to be investigated.

(2) The intermediate condition(s) to be specified incl. % consumables.

(3) For ore carriers defined in **1.3.1(13)(b), Part B**, an examination for partially filled ballast tanks may be according to **An2.1.1-2**.

Fig. An7 Loading Conditions for Strength Assessment where an Ore Carrier Conducts Ballasting/Deballasting Operations on 2 Pairs of Ballast Tanks Only at Certain Times during the Voyage

i) Departure (Consumables: 100%, No. 1 WBT(P/S): 60%, No. 7 WBT(P/S): 30%)

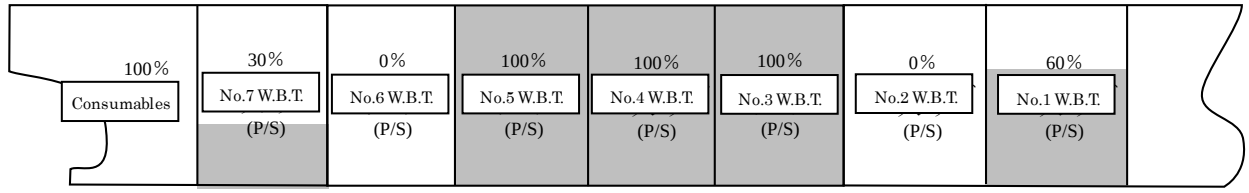

ii) Intermediate condition 1 (Consumables: 50%, No. 1 WBT(P/S): 60%, No. 7 WBT(P/S): 30%)

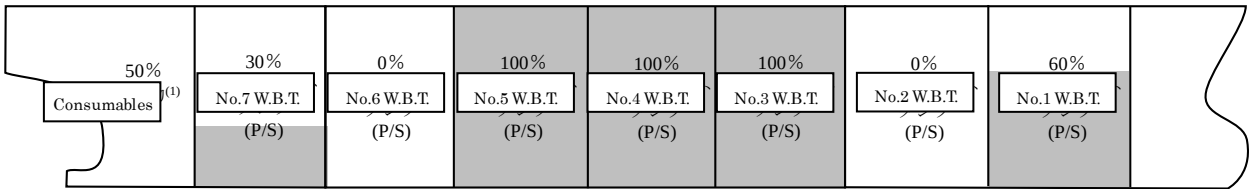

iii) Intermediate condition 2 (Consumables: 50%, No. 1 WBT(P/S): 30%, No. 7 WBT(P/S): 50%)

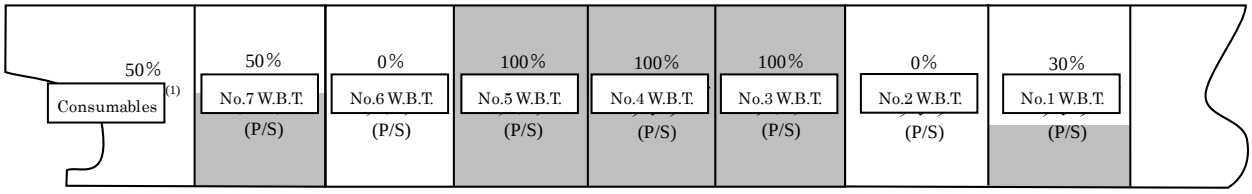

iv) Intermediate condition 3 (Consumables: 20%, No. 1 WBT(P/S): 30%, No. 7 WBT(P/S): 50%)

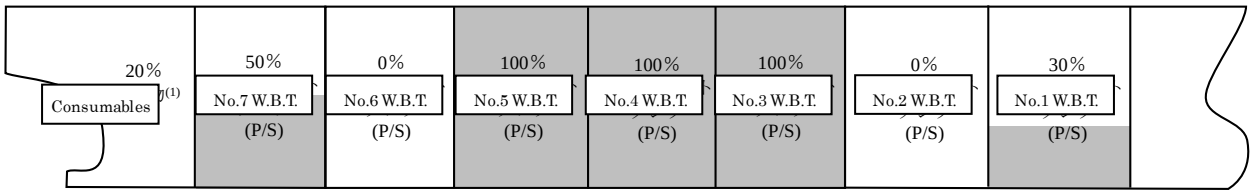

v) Intermediate condition 4 (Consumables: 20%, No. 1 WBT(P/S): 10%, No. 7 WBT(P/S): 70%)

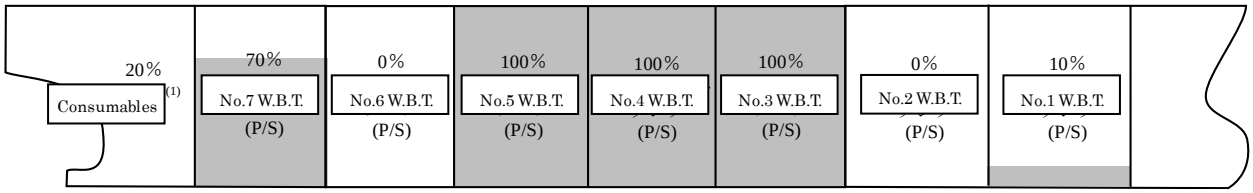

vi) Arrival (Consumables: 10%, No. 1 WBT(P/S): 10%, No. 7 WBT(P/S): 70%)

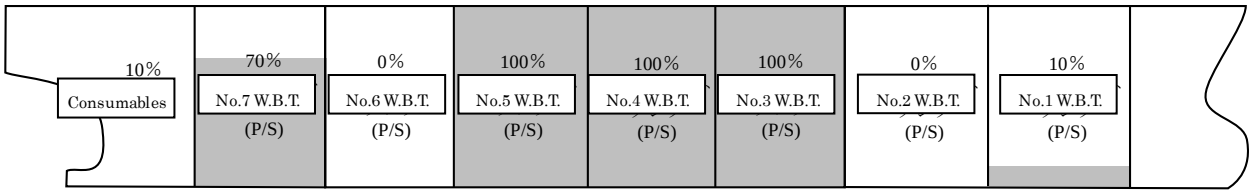

(Notes)

It is to be noted in the ship's loading manual that the timing for ballasting/deballasting is assumed to take place when the remaining consumables are at 50% and 20% for the purpose of complying with the longitudinal strength requirements and for ballasting/deballasting at other times, the longitudinal strength of the ship is to be assessed while carefully noting the filling level of the ballast tanks.

(1) The intermediate condition(s) to be specified incl. % consumables.

Fig. An8 Additional Loading Conditions for an Ore Carrier for Strength Assessment where "i) Departure"

1) Consumables: 100%, No. 1 WBT(P/S): 60%, No. 7 WBT(P/S): 100%/Max.

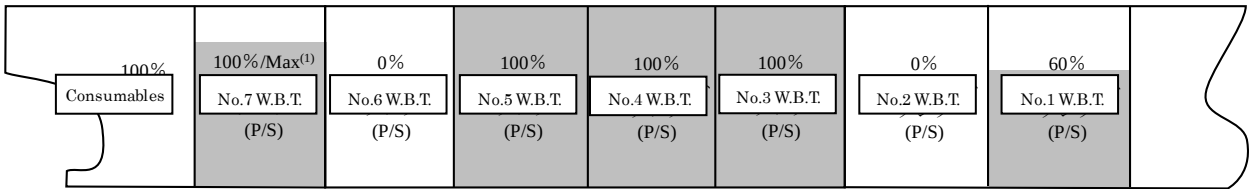

2) Consumables: 100%, No. 1 WBT(P/S): 60%, No. 7 WBT(P/S): 0%/Min.

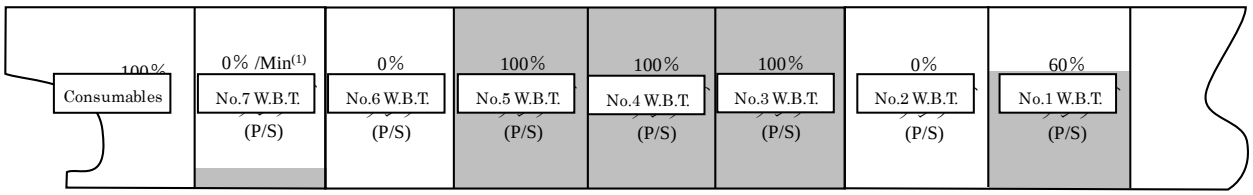

3) Consumables: 100%, No. 1 WBT(P/S): 100%/Max., No. 7 WBT(P/S): 100%

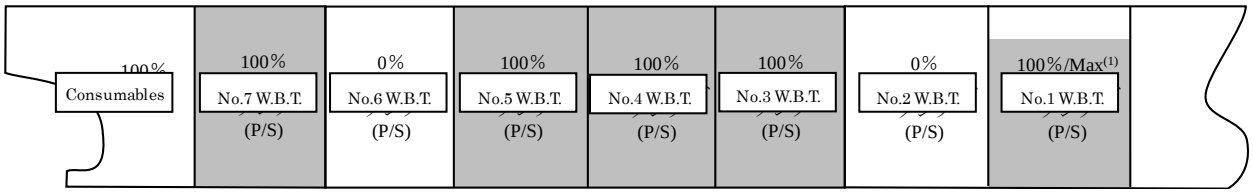

4) Consumables: 100%, No. 1 WBT(P/S): 0%/Min., No. 7 WBT(P/S): 100%

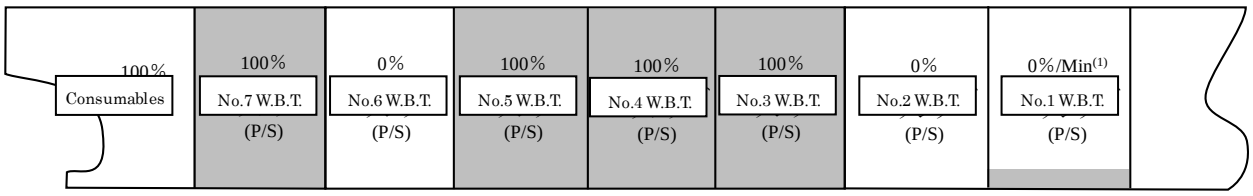

5) Consumables: 100%, No. 1 WBT(P/S): 100%/Max., No. 7 WBT(P/S): 0%

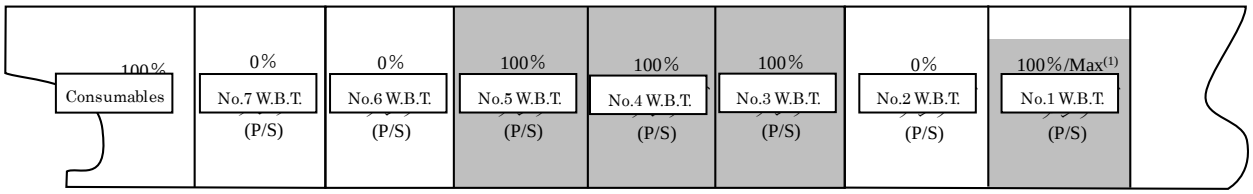

6) Consumables: 100%, No. 1 WBT(P/S): 0%/Min., No. 7 WBT(P/S): 0%

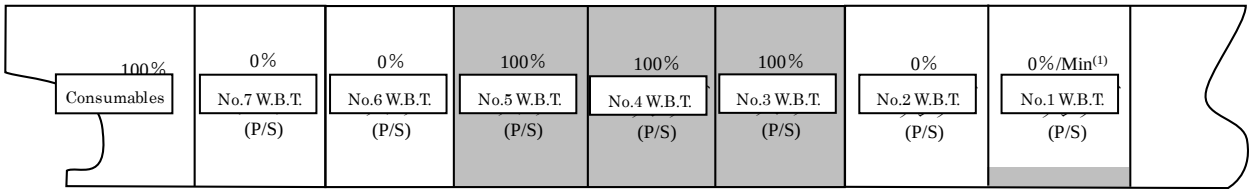

7) Consumables: 100%, No. 1 WBT(P/S): 100%/Max., No. 7 WBT(P/S): 30%

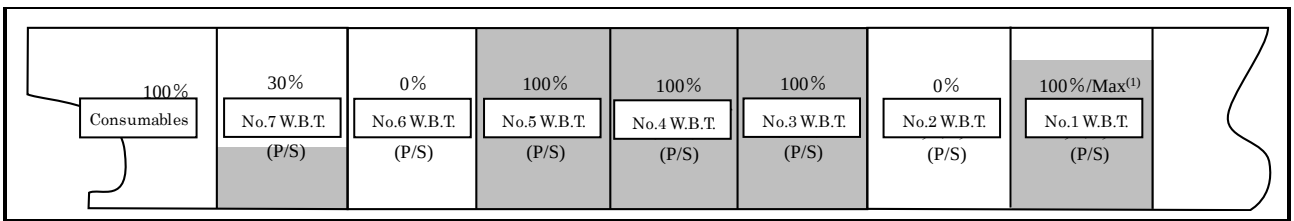

8) Consumables: 100%, No. 1 WBT(P/S): 0%/Min., No. 7 WBT(P/S): 30%

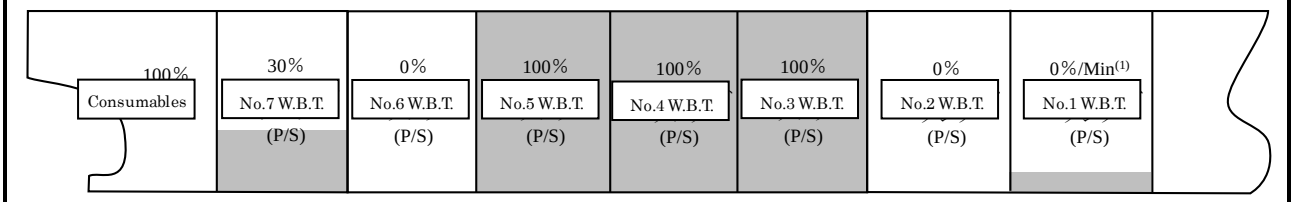

9) Consumables: 100%, No. 1 WBT(P/S): 100%, No. 7 WBT(P/S): 100%/Max.

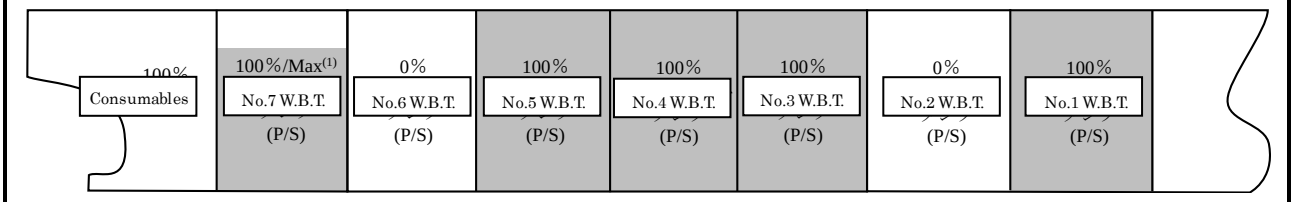

10) Consumables: 100%, No. 1 WBT(P/S): 100%, No. 7 WBT(P/S): 0%/Min.

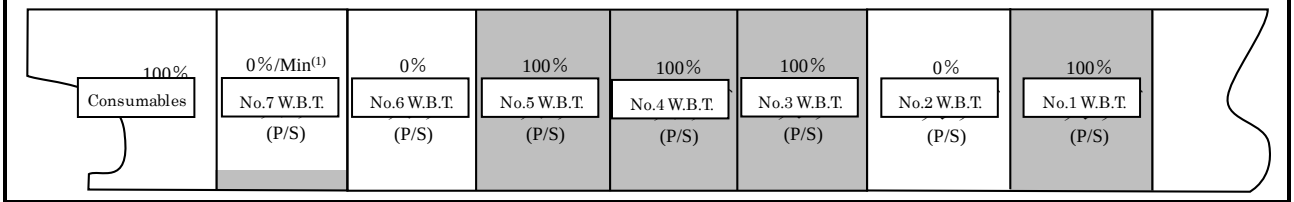

11) Consumables: 100%, No. 1 WBT(P/S): 0%, No. 7 WBT(P/S): 100%/Max.

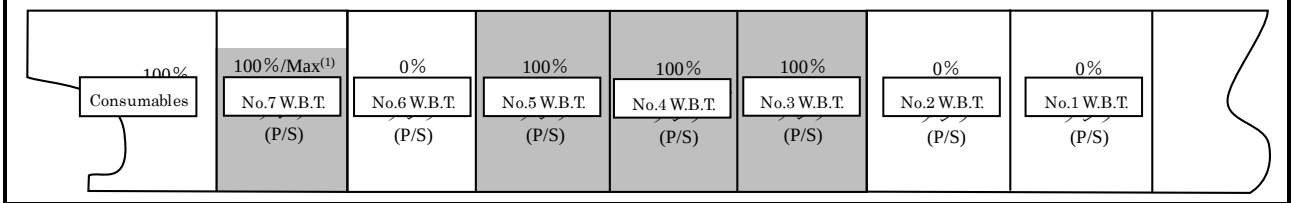

12) Consumables: 100%, No. 1 WBT(P/S): 0%, No. 7 WBT(P/S): 0%/Min.

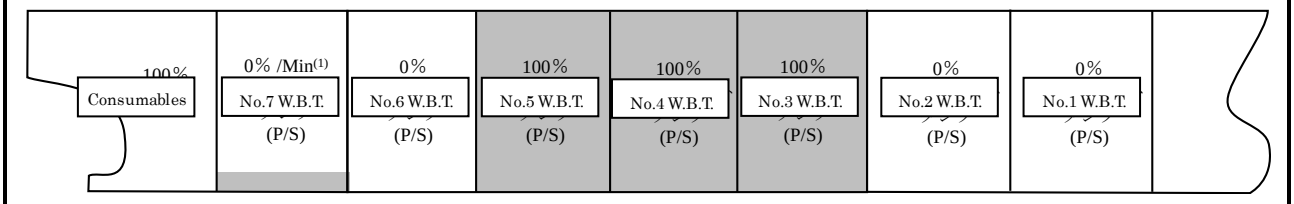

(Notes)

(1) "Max." and "Min." in the conditions may be replaced with maximum/minimum filling levels according to trim limitations specified in **An2.1.1-2**.

Fig. An9 Additional Loading Conditions for an Ore Carrier for Strength Assessment where "ii) Intermediate Condition 1"

1) Consumables: 50%, No. 1 WBT(P/S): 60%, No. 7 WBT(P/S): 100%/Max.

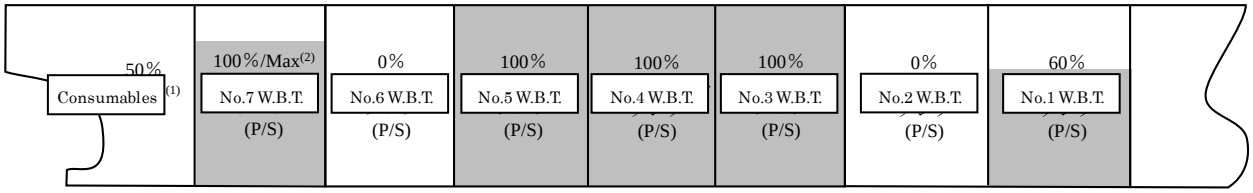

2) Consumables: 50%, No. 1 WBT(P/S): 60%, No. 7 WBT(P/S): 0%/Min.

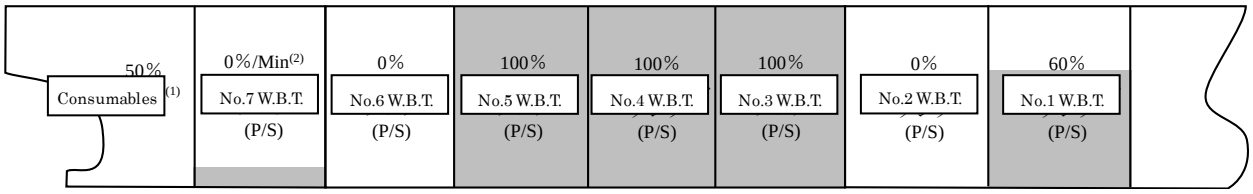

3) Consumables: 50%, No. 1 WBT(P/S): 100%/Max., No. 7 WBT(P/S): 100%

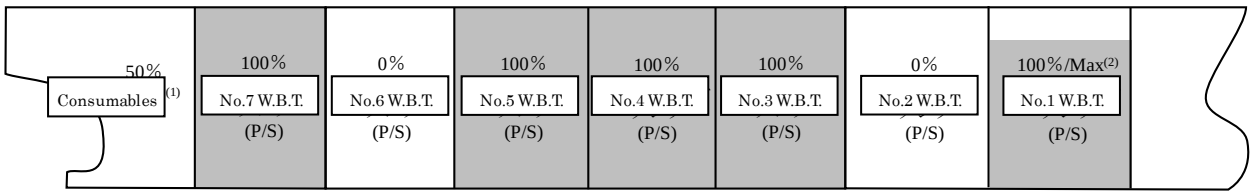

4) Consumables: 50%, No. 1 WBT(P/S): 0%/Min., No. 7 WBT(P/S): 100%

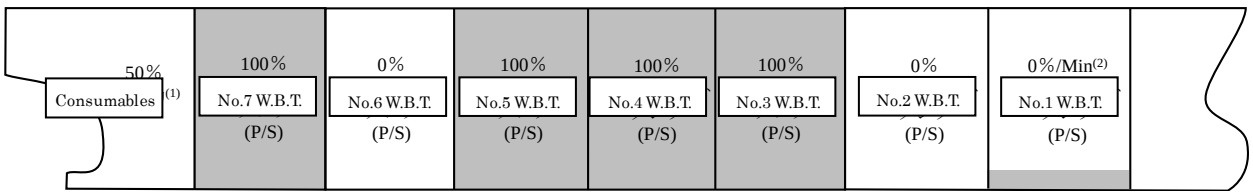

5) Consumables: 50%, No. 1 WBT(P/S): 100%/Max., No. 7 WBT(P/S): 0%

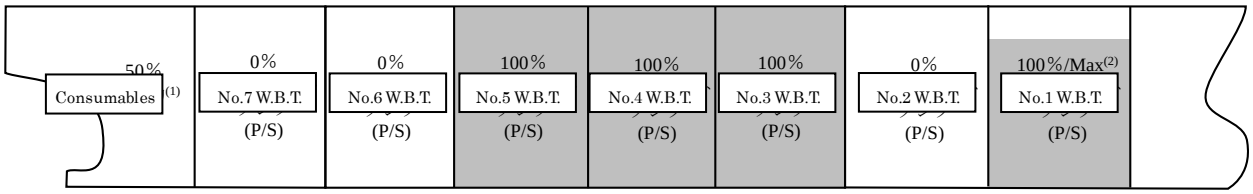

6) Consumables: 50%, No. 1 WBT(P/S): 0%/Min., No. 7 WBT(P/S): 0%

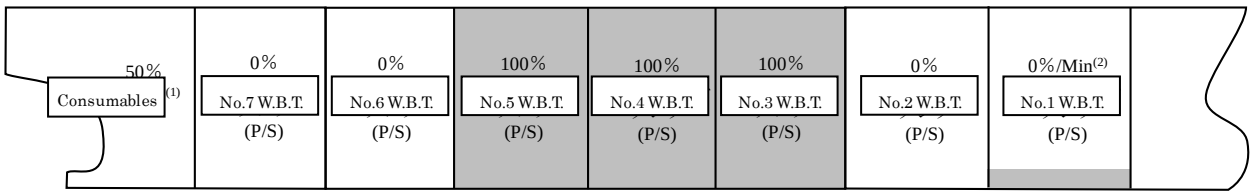

7) Consumables: 50%, No. 1 WBT(P/S): 100%/Max., No. 7 WBT(P/S): 30%

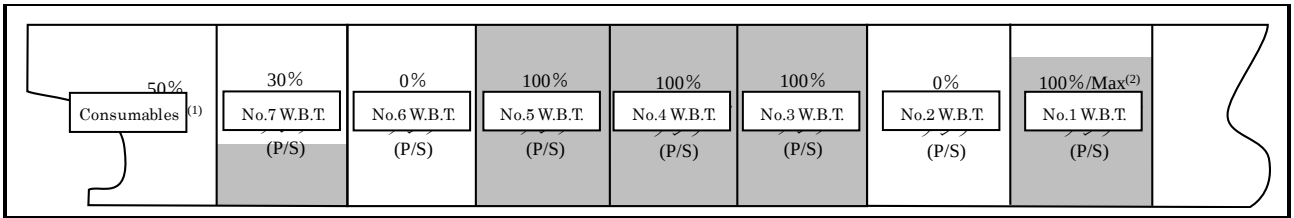

8) Consumables: 50%, No. 1 WBT(P/S): 0%/Min., No. 7 WBT(P/S): 30%

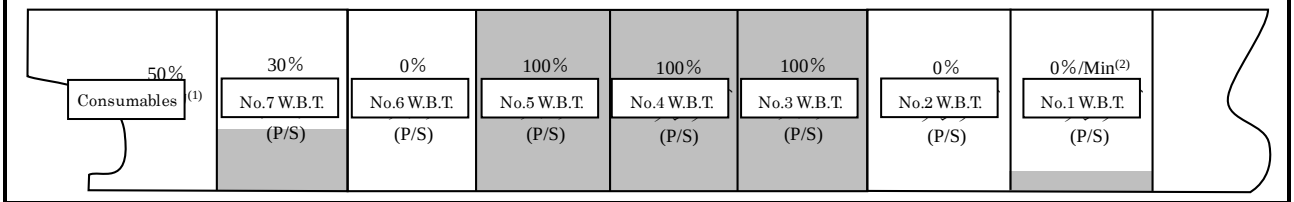

9) Consumables: 50%, No. 1 WBT(P/S): 100%, No. 7 WBT(P/S): 100%/Max.

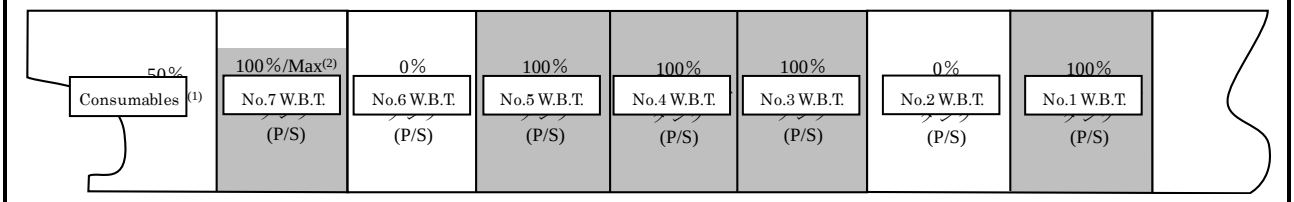

10) Consumables: 50%, No. 1 WBT(P/S): 100%, No. 7 WBT(P/S): 0%/Min.

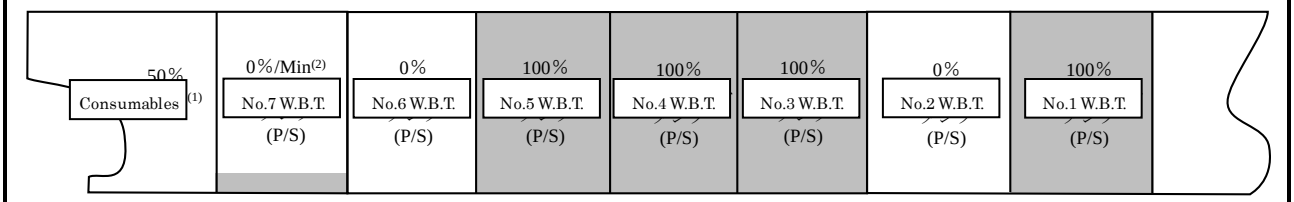

11) Consumables: 50%, No. 1 WBT(P/S): 0%, No. 7 WBT(P/S): 100%/Max.

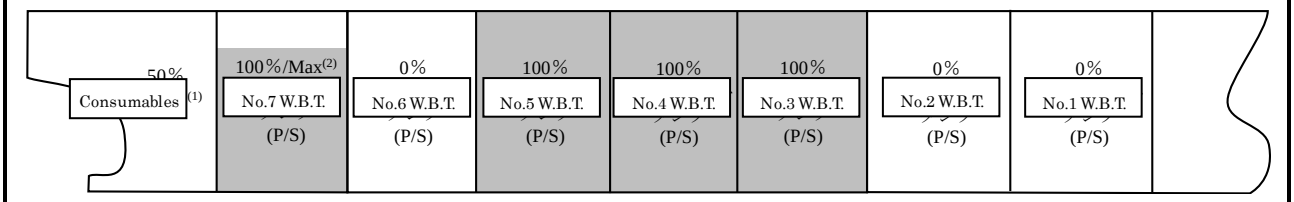

12) Consumables: 50%, No. 1 WBT(P/S): 0%, No. 7 WBT(P/S): 0%/Min.

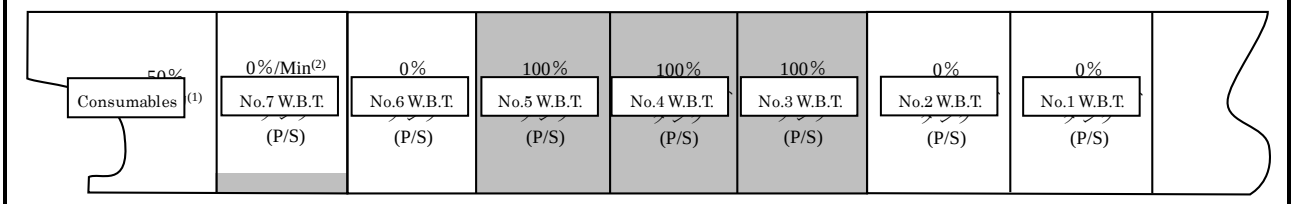

(Notes)

(1) The intermediate condition(s) to be specified incl. % consumables.

(2) "Max." and "Min." in the conditions may be replaced with maximum/minimum filling levels according to trim limitations specified in **An2.1.1-2**.

Fig. An10 Additional Loading Conditions for an Ore Carrier for Strength Assessment where "iii) Intermediate Condition 2"

1) Consumables: 50%, No. 1 WBT(P/S): 30%, No. 7 WBT(P/S): 100%/Max.

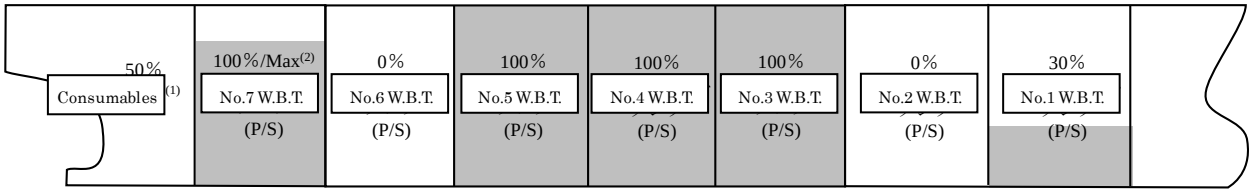

2) Consumables: 50%, No. 1 WBT(P/S): 30%, No. 7 WBT(P/S): 0%/Min.

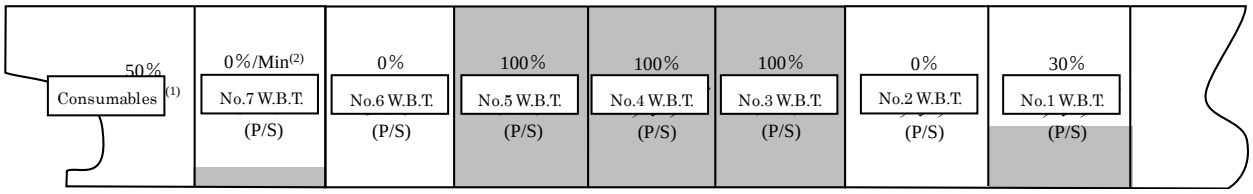

3) Consumables: 50%, No. 1 WBT(P/S): 100%/Max., No. 7 WBT(P/S): 50%

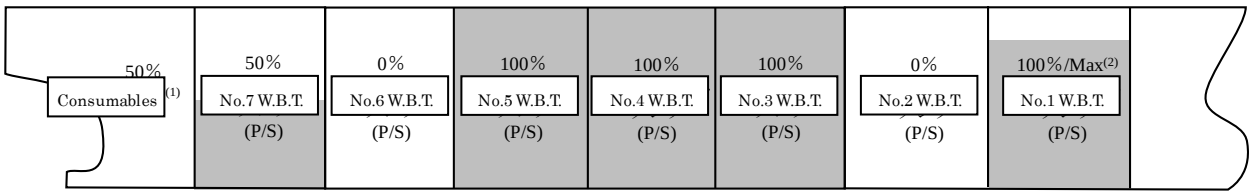

4) Consumables: 50%, No. 1 WBT(P/S): 0%/Min., No. 7 WBT(P/S): 50%

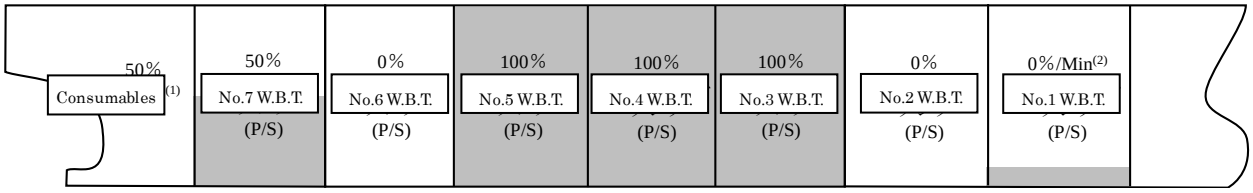

(Notes)

(1) The intermediate condition(s) to be specified incl. % consumables.

(2) "Max." and "Min." in the conditions may be replaced with maximum/minimum filling levels according to trim limitations specified in **An2.1.1-2**.

Fig. An11 Additional Loading Conditions for an Ore Carrier for Strength Assessment where "iv) Intermediate Condition 3"

1) Consumables: 20%, No. 1 WBT(P/S): 30%, No. 7 WBT(P/S): 100%/Max.

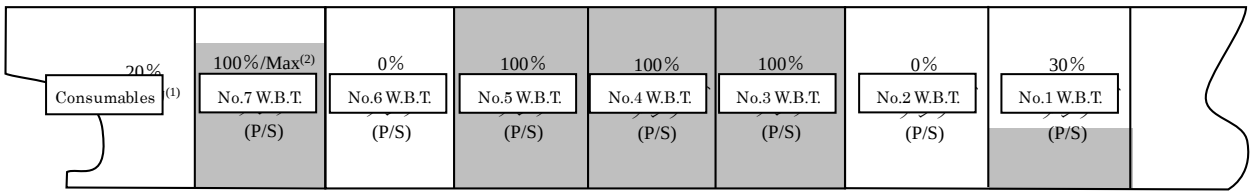

2) Consumables: 20%, No. 1 WBT(P/S): 30%, No. 7 WBT(P/S): 0%/Min.

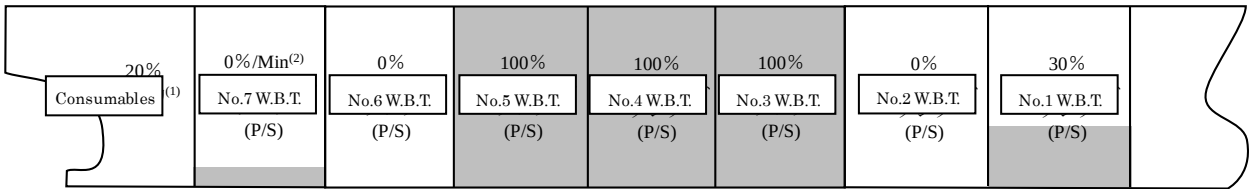

3) Consumables: 20%, No. 1 WBT(P/S): 100%, No. 7 WBT(P/S): 100%/Max.

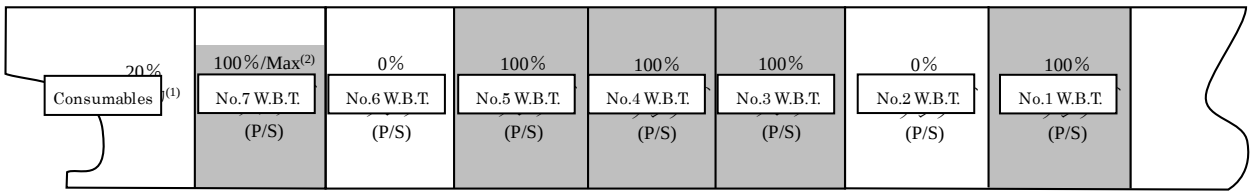

4) Consumables: 20%, No. 1 WBT(P/S): 100%, No. 7 WBT(P/S): 0%/Min.

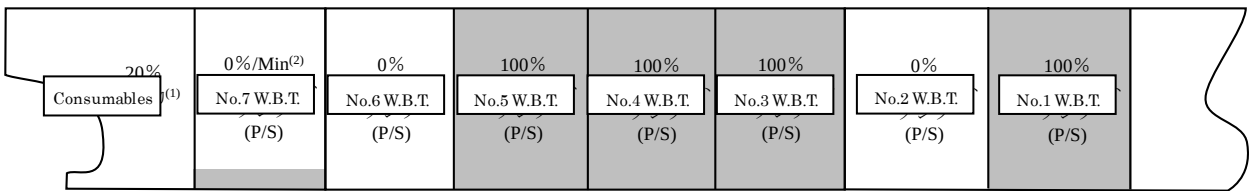

5) Consumables: 20%, No. 1 WBT(P/S): 0%, No. 7 WBT(P/S): 100%/Max.

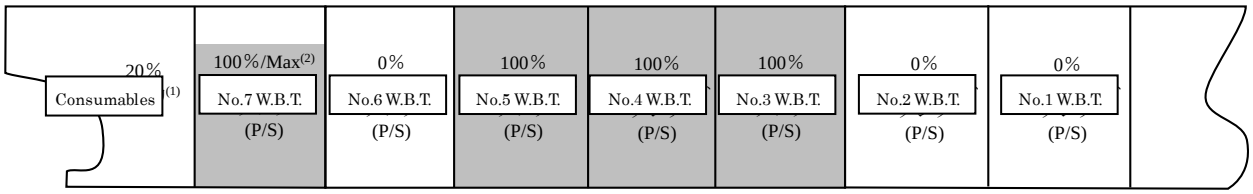

6) Consumables: 20%, No. 1 WBT(P/S): 0%, No. 7 WBT(P/S): 0%/Min.

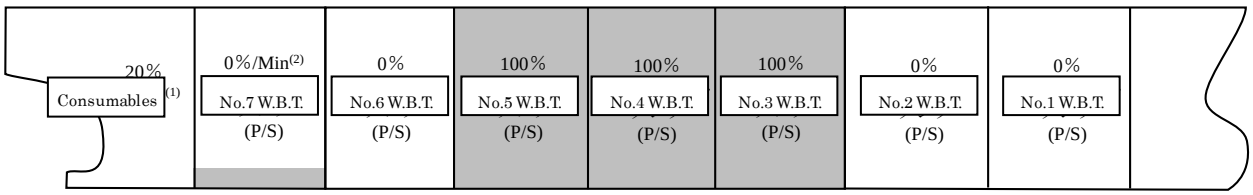

7) Consumables: 20%, No. 1 WBT(P/S): 100%/Max., No. 7 WBT(P/S): 50%

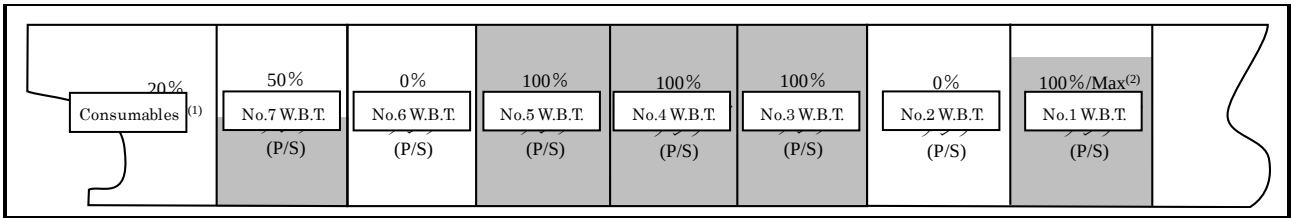

8) Consumables: 20%, No. 1 WBT(P/S): 0%/Min., No. 7 WBT(P/S): 50%

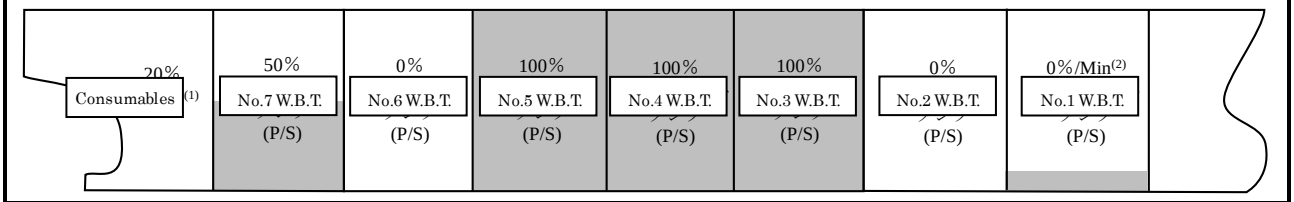

9) Consumables: 20%, No. 1 WBT(P/S): 100%/Max., No. 7 WBT(P/S): 100%

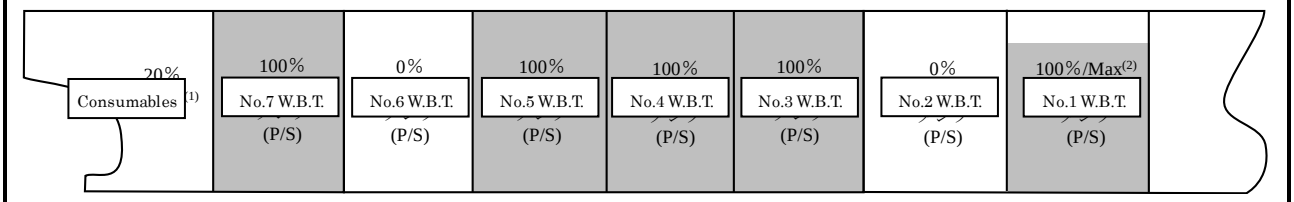

10) Consumables: 20%, No. 1 WBT(P/S): 0%/Min., No. 7 WBT(P/S): 100%

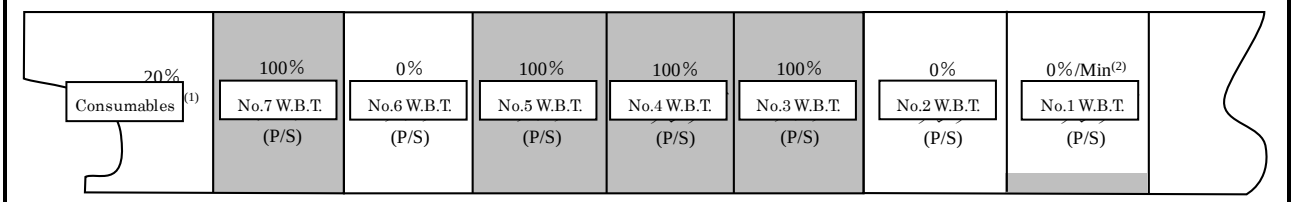

11) Consumables: 20%, No. 1 WBT(P/S): 100%/Max., No. 7 WBT(P/S): 0%

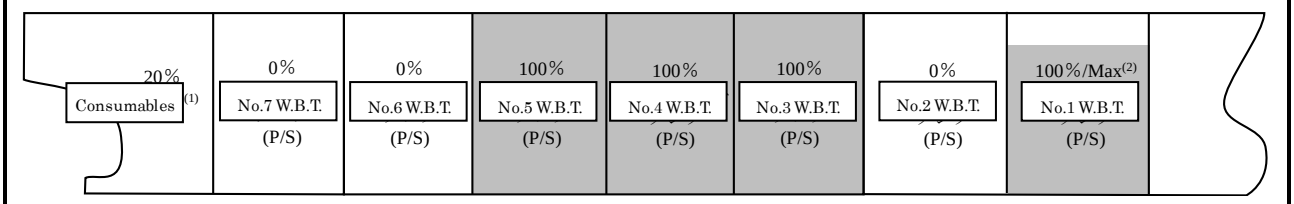

12) Consumables: 20%, No. 1 WBT(P/S): 0%/Min., No. 7 WBT(P/S): 0%

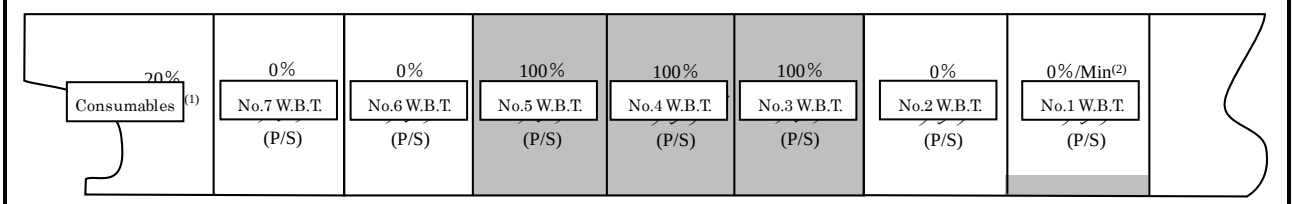

(Notes)

(1) The intermediate condition(s) to be specified incl. % consumables.

(2) "Max." and "Min." in the conditions may be replaced with maximum/minimum filling levels according to trim limitations specified in **An2.1.1-2**.

Fig. An12 Additional Loading Conditions for an Ore Carrier for Strength Assessment where "v) Intermediate Condition 4"

1) Consumables: 20%, No. 1 WBT(P/S): 10%, No. 7 WBT(P/S): 100%/Max.

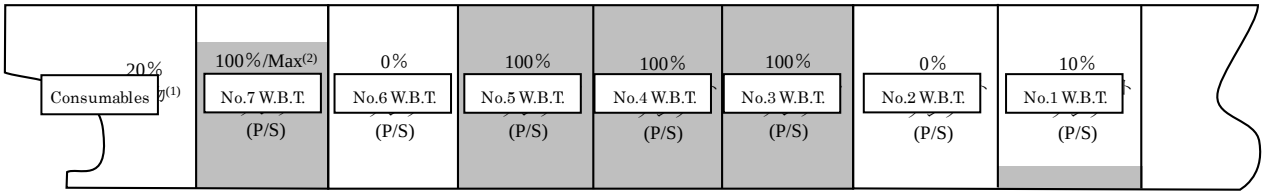

2) Consumables: 20%, No. 1 WBT(P/S): 10%, No. 7 WBT(P/S): 0%/Min.

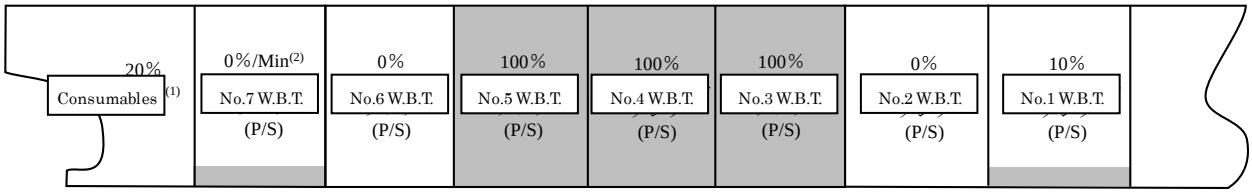

3) Consumables: 20%, No. 1 WBT(P/S): 100%/Max., No. 7 WBT(P/S): 70%

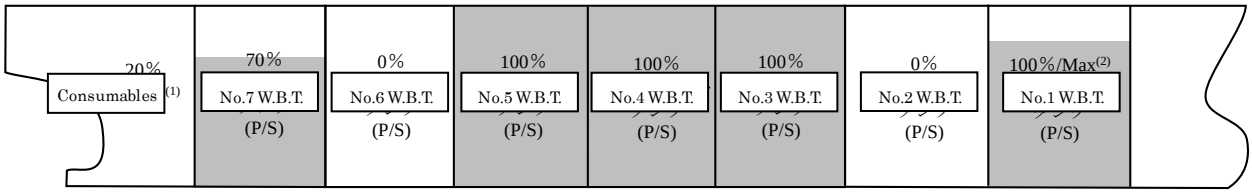

4) Consumables: 20%, No. 1 WBT(P/S): 0/Min., No. 7 WBT(P/S): 70%

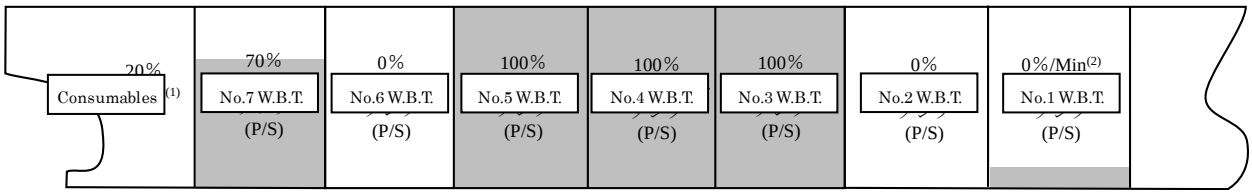

(Notes)

(1) The intermediate condition(s) to be specified incl. % consumables.

(2) "Max." and "Min." in the conditions may be replaced with maximum/minimum filling levels according to trim limitations specified in **An2.1.1-2**.

Fig. An13 Additional Loading Conditions for an Ore Carrier for Strength Assessment where "vi) Arrival"

1) Consumables: 10%, No. 1 WBT(P/S): 10%, No. 7 WBT(P/S): 100%/Max.

2) Consumables: 10%, No. 1 WBT(P/S): 10%, No. 7 WBT(P/S): 0%/Min.

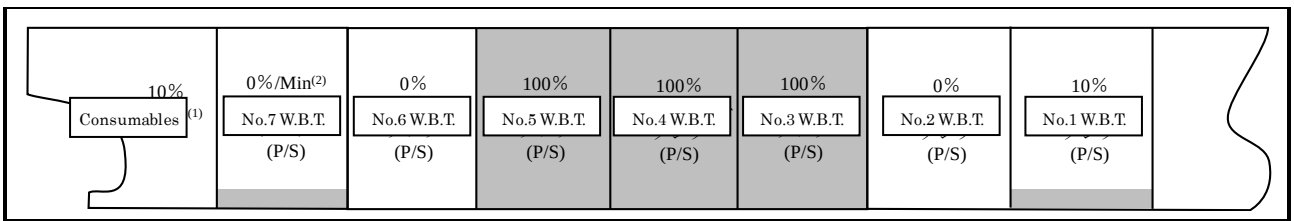

3) Consumables: 10%, No. 1 WBT(P/S): 100%, No. 7 WBT(P/S): 100%/Max.

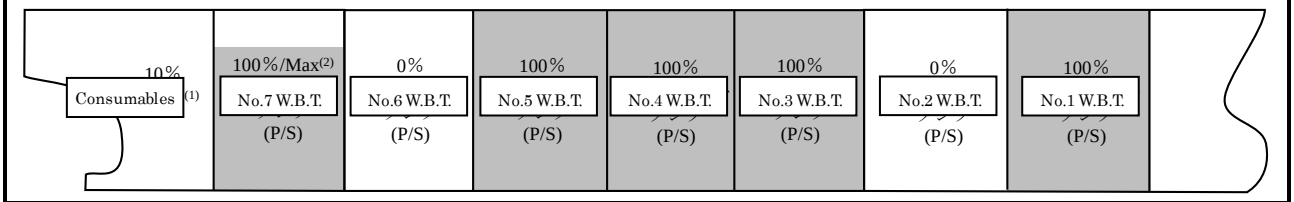

4) Consumables: 10%, No. 1 WBT(P/S): 100%, No. 7 WBT(P/S): 0%/Min.

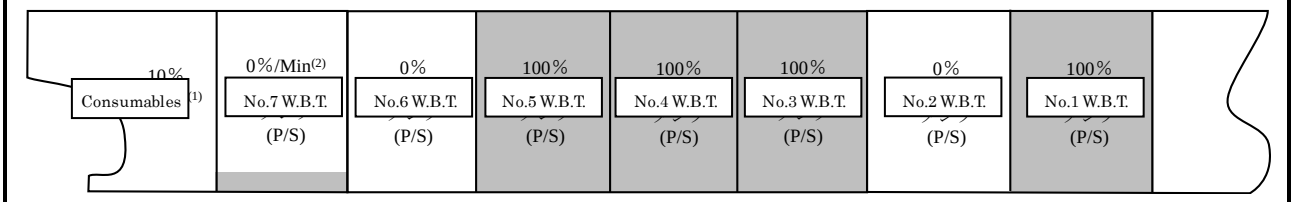

5) Consumables: 10%, No. 1 WBT(P/S): 0%, No. 7 WBT(P/S): 100%/Max.

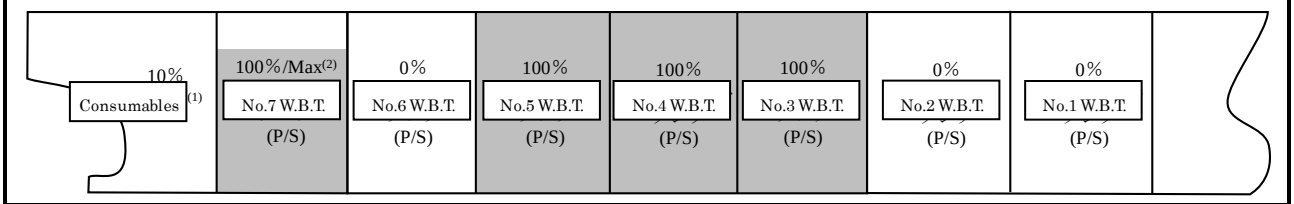

6) Consumables: 10%, No. 1 WBT(P/S): 0%, No. 7 WBT(P/S): 0%/Min.

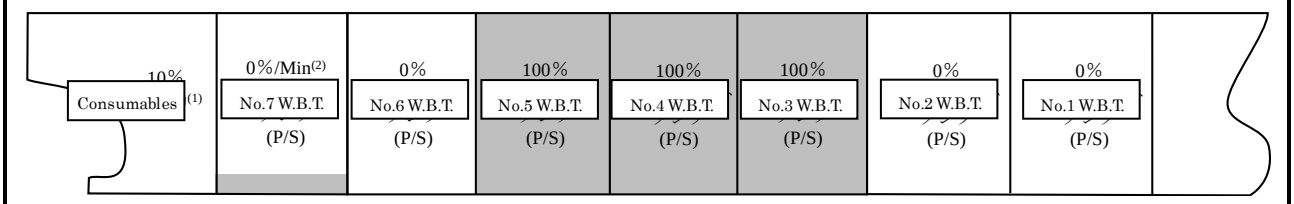

7) Consumables: 10%, No. 1 WBT(P/S): 100%/Max., No. 7 WBT(P/S): 70%

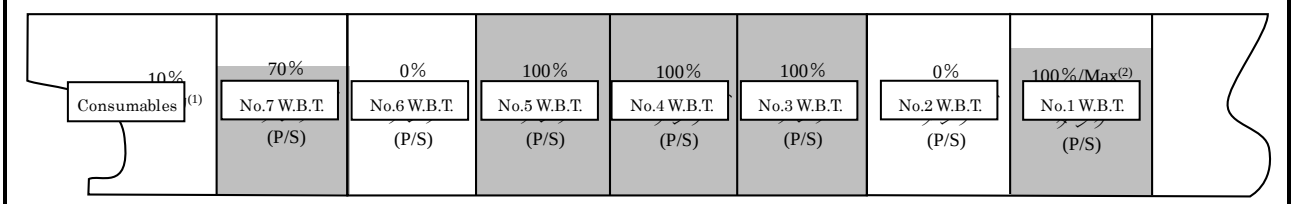

8) Consumables: 10%, No. 1 WBT(P/S): 0%/Min., No. 7 WBT(P/S): 70%

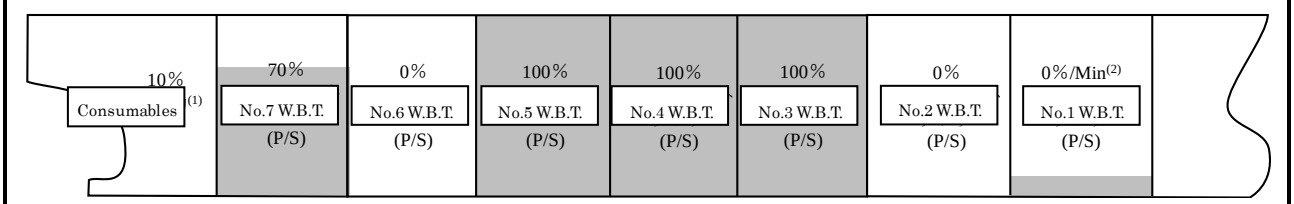

9) Consumables: 10%, No. 1 WBT(P/S): 100%/Max., No. 7 WBT(P/S): 100%

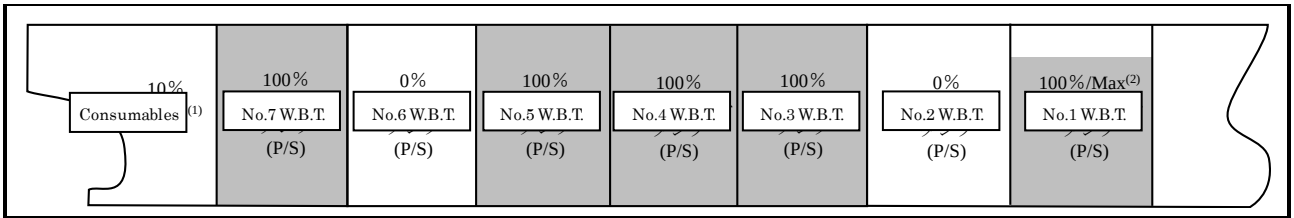

10) Consumables: 10%, No. 1 WBT(P/S): 0%/Min., No. 7 WBT(P/S): 100%

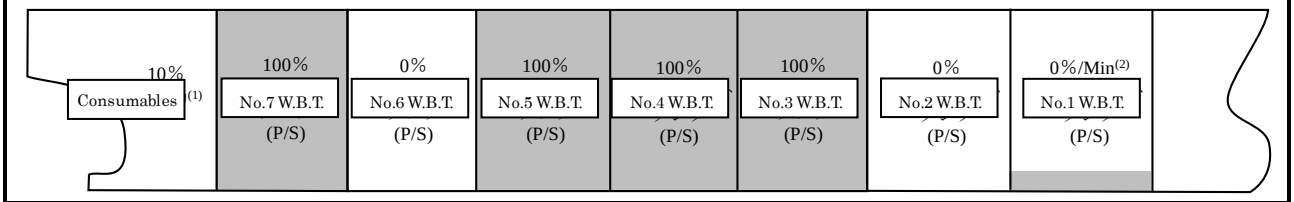

11) Consumables: 10%, No. 1 WBT(P/S): 100%/Max., No. 7 WBT(P/S): 0%

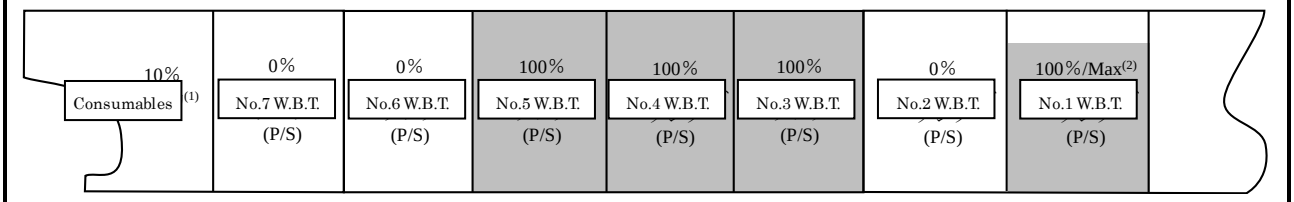

12) Consumables: 10%, No. 1 WBT(P/S): 0%/Min., No. 7 WBT(P/S): 0%

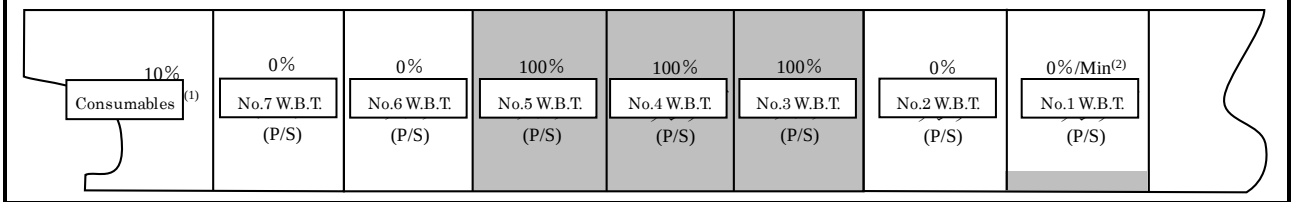

(Notes)

(1) The intermediate condition(s) to be specified incl. % consumables.

(2) "Max." and "Min." in the conditions may be replaced with maximum/minimum filling levels according to trim limitations specified in **An2.1.1-2**.

Chapter 5 LONGITUDINAL STRENGTH

Symbols

For symbols not specified in this Chapter, refer to 1.4.

M_{SV_max}, M_{SV_min}: Permissible still water vertical bending moment (*kN-m*) in the hogging and sagging conditions in the intact seagoing condition at the hull transverse section under consideration, as specified in 4.3.2.2.

M_{PT_max}, M_{PT_min}: Permissible still water vertical bending moment (*kN-m*) in the hogging and sagging conditions for harbour/sheltered water operation at the hull transverse section under consideration, as specified in 4.3.3.1.

M_{WV-h}, M_{WV-s}: Wave vertical bending moment (*kN-m*) in the hogging and sagging conditions in the intact seagoing condition at the hull transverse section under consideration, as specified in 4.3.2.3.

Q_{SV_max}, Q_{SV_min}: Permissible positive and negative vertical still water shear forces (*kN*) for seagoing operation at the hull transverse section under consideration, as specified in 4.3.2.2.

Q_{PT_max}, Q_{PT_min}: Permissible positive and negative vertical still water shear forces (*kN*) for harbour/sheltered operation at the hull transverse section under consideration, as specified in 4.3.3.2.

Q_{WV-p}, Q_{WV-n}: Positive and negative wave vertical shear forces (*kN*) in the intact seagoing condition at the hull transverse section under consideration, as specified in 4.3.2.4.

x: *X*-coordinate (*m*) of the calculation point with respect to the reference coordinate system specified in 1.4.3.6.

z: *Z*-coordinate (*m*) of the calculation point with respect to the reference coordinate system specified in 1.4.3.6.

5.1 General

5.1.1 Overview

5.1.1.1

This Chapter specifies the longitudinal strength requirements in Table 5.1.1-1 for all ships other than those subject to Part 2-1.

Table 5.1.1-1 Overview of Chapter 5

Section	Title	Overview
5.1	General	Application of Chapter 5 and requirements concerning the general principles related to its application
5.2	Yield Strength	Requirements for bending and shear yield strength assessments (gross scantlings)
5.3	Buckling Strength	Requirements for buckling strength assessment (plate thickness deduction for buckling strength assessment)
5.4	Hull Girder Ultimate Strength	Requirements for hull girder ultimate strength assessment (net scantlings)
5.5	Torsional Strength	Requirements for torsional strength assessment (gross scantlings)
Annex 5.1	Extent of High Tensile Steel Use	Reference requirements for the extents of high tensile steel
Annex 5.2	Calculation of Shear Flow	Requirements for the direct calculation procedure for shear flows working along the hull transverse section
Annex 5.3	Buckling Strength Assessment Based on	Requirements for buckling critical stress used in buckling strength

	Longitudinal Strength (UR S11)	assessment for longitudinal strength
Annex 5.4	Hull Girder Ultimate Strength	Requirements for hull girder ultimate strength assessment

5.1.2 Application

5.1.2.1

1 Longitudinal strength of ships are to be assessed in accordance with the requirements specified in this Chapter. However, container carriers subject to Part 2-1 are to be assessed in accordance with the requirements in Chapter 5, Part 2-1.

2 Ships to which direct application of the requirements in this Chapter is deemed unreasonable and the handling of such ships are to be in accordance with **(1)** and **(2)** below:

(1) For ships whose C_{B1} value is less than 0.65, the permissible vertical bending stress σ_{perm} specified in 5.2.1.2 is to be modified by division by the coefficient determined by **(a)** and **(b)** below according to the C_{B1} value:

(a) Where $C_{B1} \leq 0.60$: 1.05

(b) Where $0.60 < C_{B1} < 0.65$: $1.65 - C_{B1}$

(2) In addition to **(1)**, ships of special form or construction, ships with special loading requirements, etc. are to be in accordance with the discretion of the Society.

5.1.3 Scantlings Used for Strength Assessment

5.1.3.1

1 The requirements specified in this Chapter, except those for buckling strength and hull girder ultimate strength specified in 5.3 and 5.4, are based on gross scantlings.

2 Buckling strength assessment is to be carried out with the deducted thickness specified in 5.3.1.4.

5.1.4 Continuity of Structure

5.1.4.1

1 Continuity of structure is to be maintained throughout the length of the ship.

2 Where significant changes in structural arrangement occur, adequate transitional structure is to be provided.

5.2 Yield Strength

5.2.1 Bending Strength

5.2.1.1 Evaluation Area

1 The bending strength assessment specified in 5.2.1.2 is to be applied to the full length of the ship from AE to FE.

2 Notwithstanding the requirement in **-1** above, evaluation areas near AE and FE and with an extremely small depth of the evaluation cross section need not be assessed.

3 The following locations **(1)** to **(6)** are to be assessed with adequate care:

(1) In way of the forward end of the engine room

(2) In way of the forward end of the foremost cargo hold

(3) At any locations where there are significant changes in the hull cross section

(4) At any locations where there are changes in the framing system

(5) In way of the aft end of the aft-most holds of ships with large deck openings and with cargo holds aft of the superstructure, deckhouse, or engine room

(6) At end of the deckhouse or engine room of ships with large deck openings and with cargo holds aft of the superstructure, deckhouse, or engine room

5.2.1.2 Bending Strength Assessment

The vertical bending stress σ_{HG} (N/mm^2) is to satisfy the following formula for the hogging and sagging conditions:

$|\sigma_{HG}| < \sigma_{perm}$

Where:

σ_{HG}: Vertical bending stress (N/mm^2) defined as follows:

For members below strength deck at side,

$$\sigma_{HG} = \frac{M_S + M_W}{I_{gr}}(z - z_n) \times 10^5$$

For members at and above strength deck at side,

$$\sigma_{HG} = \frac{M_S + M_W}{I_{gr}} V_D \times 10^5$$

M_W and M_S: Wave and still water vertical bending moments (kN-m) under consideration, as specified in **Table 5.2.1-1**.

I_{gr}: Moment of inertia of the hull transverse section (cm^4) (gross scantlings)

V_D: Value of V_{D1} or V_{D2}, whichever is greater.

V_{D1}: Vertical distance (m) from the neutral axis to the bottom of the strength deck at side.

V_{D2}: Distance (m) obtained from the following formula:

$$V_{D2} = Z\left(0.9 + 0.2\frac{Y}{B_{x2}}\right)$$

Z: Vertical distance (m) from the neutral axis to the top of the continuous strength member

Y: Horizontal distance (m) from top of continuous strength member to the centre line of the ship

In this case, Z and Y are to be measured at the point which gives the largest value for the above formula.

B_{x2}: Ship breadth (m) at the strength deck at side on the hull transverse section under consideration

σ_{perm}: Permissible vertical bending stress (N/mm^2) as defined in **Table 5.2.1-2**.

Table 5.2.1-1 Wave and Still Water Vertical Bending Moments to be Considered

Condition	M_S	M_W
Maximum load condition	Still water and wave vertical bending moments for the hogging and sagging load cases shown in **4.3.2.5**	
Operation in harbor/sheltered water	$M_{PT\ max}$ or $M_{PT\ min}$	0

Table 5.2.1-2. Permissible Vertical Bending Stress σ_{perm}

Condition	Design load	σ_{perm}
Maximum load condition	(S+D)	175/K
Operation in harbor/sheltered water	(S)	149/K

5.2.1.3 Minimum Section Modulus and Minimum Moment of Inertia of Hull Transverse Section

1 The gross section modulus of the transverse section of the hull amidships is not to be less than the value obtained from the following formula:

$$Z_{gr_min} = KC_1{L_C}^2B(C_{B1} + 0.7) \ \ (cm^3)$$

2 The gross moment of inertia of the transverse section of the hull amidships is not to be less than the value obtained from the following formula. Note, however, that the calculation method for the moment of inertia of the actual transverse section is to be in accordance with the requirements in **5.2.1.4,** with necessary modifications.

$$I_{gr_min} = 3C_1{L_C}^3B(C_{B1} + 0.7) \ \ (cm^4)$$

3 The scantlings of longitudinal members in way of the midships part are not to be less than the scantlings of longitudinal members at the midship which are determined by the requirements **-1** and **-2** above, excluding changes in the scantlings due to variations in the sectional form of the transverse section of the hull.

5.2.1.4 Calculation of Section Modulus and Moment of Inertia of Hull Transverse Section

1 The calculation of the section modulus and moment of inertia of the hull transverse section is to be in accordance with the following requirements **(1)** to **(6)**:

(1) All longitudinal members which are considered effective to the longitudinal strength are to be included in the calculation. The following requirements **(a)** to **(e)** are to be complied with.

(a) The following members are not to be considered in the calculation as they are considered not contributing to the hull girder sectional area:

i) Superstructures which do not form a strength deck

ii) Deckhouses

iii) Vertically corrugated bulkheads, according to **(e)**

iv) Bulwarks and gutter plates

v) Bilge keels

vi) Sniped or non-continuous longitudinals

vii) Non-continuous hatch coaming

(b) Continuous trunks and longitudinal continuous hatch coaming may be included in the hull girder transverse sections, provided that they are effectively supported by longitudinal bulkheads or primary supporting members.

(c) Longitudinals or girders welded above the strength deck, including the deck of any trunk fitted as specified in **(b)**, are to be included in the hull girder transverse sections.

(d) Where longitudinal girders, effectively supported by longitudinal bulkhead, are fitted between hatchways, the sectional area of these longitudinal girders are to be included in the hull girder transverse section.

(e) For longitudinal bulkheads with vertical corrugations, the vertical corrugations are not to be included in the hull girder transverse section. Longitudinal bulkheads with vertical corrugations are not effective for hull girder bending, but they are effective for hull girder shear force.

(2) Deck openings on the strength deck are to be deducted from the sectional area of the deck. However, small openings not exceeding 2.5 m in length and 1.2 m in breadth need not be deducted, provided that the sum of their breadths in any single transverse section is not more than $0.06(B - \Sigma b)$. Σb is the sum of the openings exceeding 1.2 m in breadth or 2.5 m in length (m).

(3) Notwithstanding the requirement in **(2)** above, small openings on the strength deck need not be deducted, provided that the sum of their breadths in one single transverse section does not reduce the section modulus at the strength deck or the ship bottom by 3% or more.

(4) Deck openings specified in **(2)** and **(3)** above include shadow areas obtained by drawing two tangential lines with an apex angle of 30 degrees having their apex on the line drawn through the center of the small openings along the ship length. (*See* **Fig. 5.2.1-1**)

(5) The section modulus Z_D at the strength deck is to be calculated by dividing the moment of inertia of the athwartship section about its horizontal neutral axis by the following distance **(a)** or **(b)**, whichever is greater:

(a) Vertical distance V_{D1} (m) from the neutral axis to the bottom of the strength deck at side

(b) Distance, V_{D2}, (m) obtained from the following formula:

$$V_{D2} = Z\left(0.9 + 0.2\frac{Y}{B_x}\right)$$

Z: Vertical distance (m) from the neutral axis to the top of the continuous strength member

Y: Horizontal distance (m) from top of continuous strength member to the centre line of the ship

In this case, Z and Y are to be measured at the point which gives the largest value for the above formula.

B_{x2}: Ship breadth (m) at the strength deck at side on the hull transverse section under consideration

(6) The section modulus Z_B at the ship bottom is to be obtained by dividing the moment of inertia of the athwartship section about its horizontal neutral axis by the vertical distance from the neutral axis to the top of the keel.

Fig. 5.2.1-1 Effective Areas in way of Non-continuous Decks and Longitudinal Bulkheads

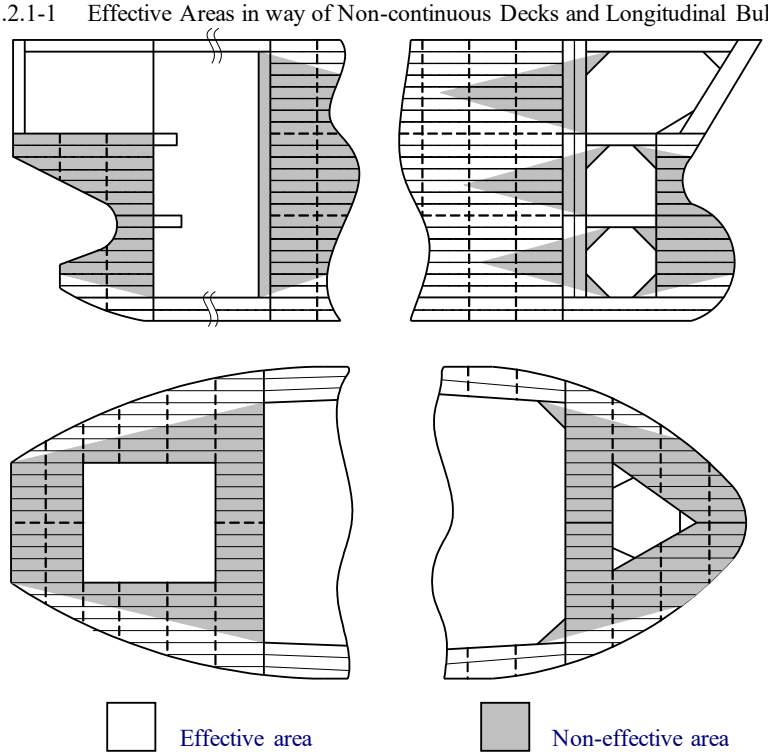

2 The ratio of inclusion of members effective for longitudinal strength is to be in accordance with the following requirements **(1)** to **(7)**:

(1) Longitudinal members may be included if the fillet welding for these longitudinal members comply with **12.2.1.3-2**.

(2) All doubling plates may be included if fitted during ship construction or 90% if fitted during conversion or addition.

(3) For side stringers, slots for stiffeners are to be deducted.

(4) Scallops complying with the following conditions need not be deducted from the sectional area (*See* **Fig. 5.2.1-2**):

(a) d_S not exceeding $d/4$ nor exceeding $7t$, maximum 75 mm

(b) S not less than $5b$ and not less than $10d_S$

(5) As for the cross decks of ships having two or three rows of hatches, the ratio of sectional area to be included in calculation of the section modulus is to be obtained from **Table 5.2.1-3**. For intermediate values of ξ and ℓ/L, linear interpolation is to be applied.

$$\xi = \frac{aB_C{}^3}{\ell I_C}\left[\frac{1+2\mu}{6(2+\mu)}\cdot 10^4 + 2.6\frac{I_C}{a_C B_C{}^2}\right]$$

I_C: Moment of inertia (cm^4) of cross deck, including hatch end coamings.

a_C: Effective shear sectional area (cm^2) of cross deck.

a: Sectional area (cm^2) of cross deck (port or starboard side half).

ℓ: Length (m) of hatch.

B_C (m) and μ: Refer to **Fig. 5.2.1-3**.

(6) Where the sectional area of longitudinals, which are unable to be continued due to factors such as the arrangement of small hatch openings are compensated by adjacent ones, they may be included in the calculation of the section modulus of the transverse section.

(7) Where the car deck plating of exclusive car carriers is intermittently welded in lap joints, they are not to be included in the calculation of the section modulus of the transverse section.

3 Openings in strength decks other than the cross deck area are to be treated in accordance with the following requirements **(1)** and **(2)**:

(1) Where the shape and dimensions do not meet the conditions in **Table 5.2.1-4**, reinforcement by means of rings or thicker plates is to be provided. (*See* **Figs. 5.2.1-2** and **5.2.1-5**)

(2) Where the intervals between the centers of the holes e do not meet the requirements in **Fig. 5.2.1-6**, reinforcement as per **(1)**

above is to be provided.

Fig. 5.2.1-2 S, b and d_S of Scallops

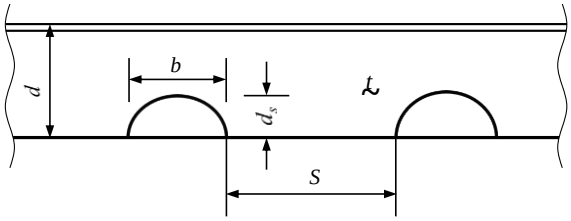

Table 5.2.1-3 Ratio of Inclusion of Sectional Area

	Hatches in 2 rows			Hatches in 3 or more rows		
ξ	ℓ/L					
	0.10	0.20	0.30	0.10	0.15	0.20
0	0.96	0.85	0.70	0.96	0.91	0.85
0.5	0.65	0.57	0.48	0.89	0.80	0.69
1.0	0.48	0.43	0.36	0.83	0.73	0.62
2.0	0.32	0.29	0.25	0.73	0.63	0.53
3.0	0.24	0.22	0.18	0.65	0.57	0.47

Table 5.2.1-4 Shapes and Dimensions of Openings

	Elliptic holes	Circular holes
Oil tankers	$\frac{a}{b} \leq \frac{1}{2}$, $a \leq 0.06B$ ($a_{\max} = 900\ mm$)	$a \leq 0.03B$ ($a_{\max} = 450\ mm$)
Cargo ships	$\frac{a}{b} \leq \frac{1}{2}$, $a \leq 0.03(B - b_H)$ ($a_{\max} = 450\ mm$)	$a \leq 0.015(B - b_H)$ ($a_{\max} = 200\ mm$)

Fig. 5.2.1-3 ℓ, b and μ

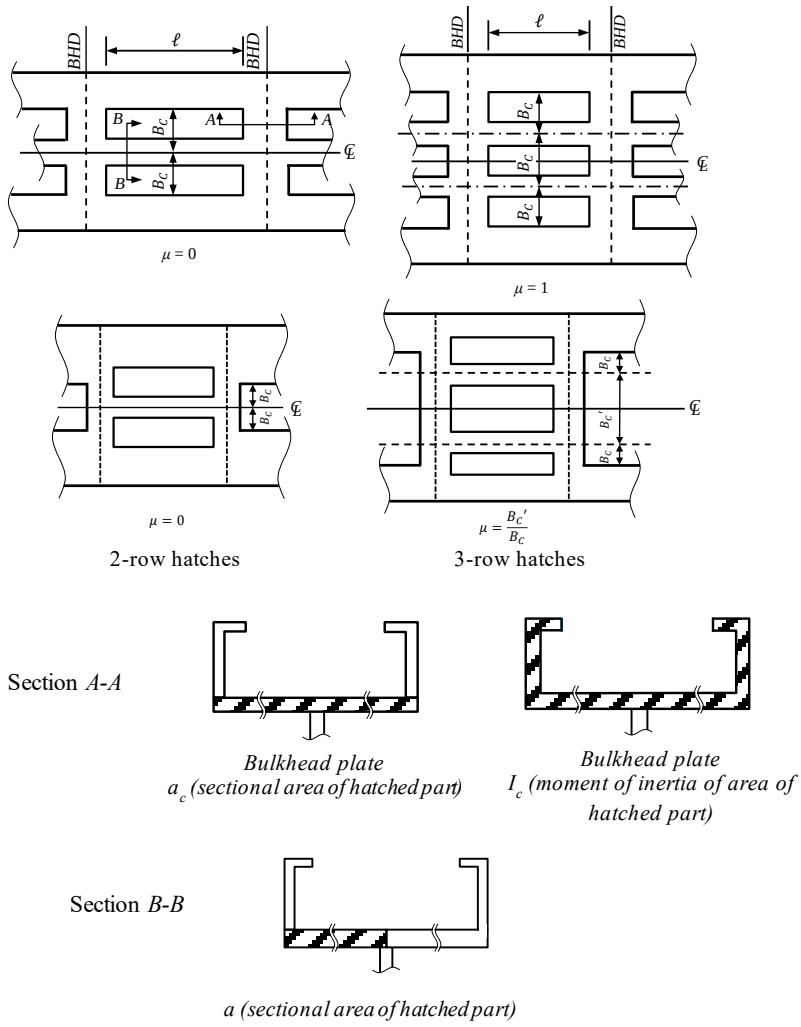

Fig. 5.2.1-4 Where Elliptic Hole and Circular Hole are in Same Cross section

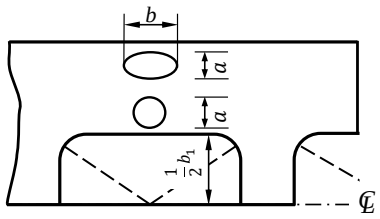

Fig. 5.2.1-5 Reinforcement by Means of Ring

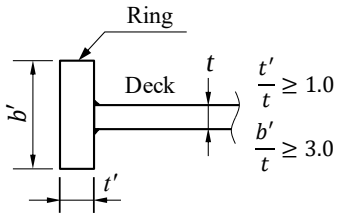

Fig. 5.2.1-6 Intervals between Centers of Holes

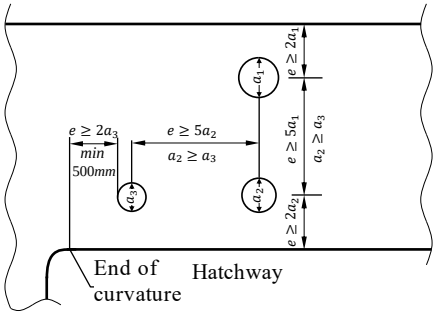

5.2.2 Shear Strength

5.2.2.1 Evaluation Area

Vertical shear strength assessment specified in **5.2.2.2** is to be applied to the full length of the ship from AE to FE.

5.2.2.2 Vertical Shear Strength

Vertical shear stress τ_{HG} (N/mm^2) is to satisfy the following formula for all plates contributing to the vertical shear strength of the transverse section under consideration:

$$|\tau_{HG}| < \tau_{perm}$$

τ_{HG}: Vertical shear stress (N/mm^2), to be taken as follows:

$$\tau_{HG} = \frac{(Q_S + Q_W)q_v}{t_{gr}} \times 10^3$$

Q_W and Q_S: Wave and still water vertical shear forces (kN) as specified in **Table 5.2.2-1**.

q_v: Shear flow (N/mm) at any location when the unit shear force acts along the cross section under consideration, to be determined in accordance with **Annex 5.2 "CALCULATION OF SHEAR FLOW".**

t_{gr}: Gross thickness (mm) of plate under consideration.

τ_{perm}: Permissible vertical shear stress (N/mm^2), as specified in **Table 5.2.2-1**.

Table 5.2.2-1 Wave and Still Water Shear Forces to be Considered

Condition	Q_W	Q_S
Maximum load condition	Still water vertical shear force and wave vertical shear force for the hogging and sagging load cases shown in **4.3.2.5**	
Operation in harbor/sheltered water	0	$Q_{PT\ max}$ or $Q_{PT\ min}$

Table 5.2.2-2 Permissible Vertical Shear Stresses

Condition	Design load	Permissible vertical shear stress τ_{i-perm}
Maximum load condition	(S+D)	110/k
Operation in harbor/sheltered water	(S)	102/k

5.2.2.3 Local Shear Force

In case of unbalanced loading of cargoes on a ship which is not subject to the application of **Chapter 8**, has longitudinal bulkheads other than the double side hull structure, and has a long cargo hold, the effect of local shear force due to unbalanced loading is to be taken into account.

5.2.2.4 Modification of Shear Force in Still Water Under Alternate Loading Condition

Where a loaded hold (or a ballast hold) adjoins an empty hold with a transverse bulkhead, the still water shear force at the hull transverse section under consideration may be determined in accordance with **Table 5.2.2-3**. (*See* **Fig. 5.2.2-1**)

Table 5.2.2-3 Shear Force modified Considering Alternate Loading Condition

Condition	Shear force Q_{S_m} modified considering alternate loading condition
Maximum load condition	$Q_{SW_m} = Q_{SW} + \Delta Q_{mdf}$
Operation in harbor/sheltered water	$Q_{SW_m} = Q_{SW-p} + \Delta Q_{mdf}$

Where:

$$\Delta Q_{mdf} = C_d \alpha \left(\frac{M}{B_H \ell_0} - \rho T_{LC,mh} \right)$$

C_d: Distribution coefficient, to be taken as:

(1) At the aft end of the considered cargo hold except for aftmost cargo hold: $C_d = -1$

(2) At the fore end of the considered cargo hold except for foremost cargo hold: $C_d = 1$

(3) At mid-length of the cargo hold: $C_d = 0$

(4) At the aft bulkhead of the aftmost cargo hold: $C_d = 0$

(5) At the fore bulkhead of the foremost cargo hold: $C_d = 0$

(6) At other locations: To be determined by linear interpolation from **(1)** to **(5)** above.

α: Coefficient taken as:

$$\alpha = g \frac{\ell_0 B_0}{2 + \varphi \frac{\ell_0}{B_0}}$$

φ: Value obtained from the following formula, but not greater than 3.7.

$$\varphi = 1.38 + 1.55 \frac{\ell_0}{B_0}$$

M: Mass (t) in the hold in way of the considered transverse section for the considered loading condition. M is to include the mass of ballast water and fuel oil located directly below the flat portion of the inner bottom, if any, excluding the portion under the bulkhead stool.

B_H: Breadth (m) of the cargo hold, as specified in **4.6**.

ℓ_H: Length (m) of the cargo hold, as specified in **4.6**.

ℓ_0, B_0: Length and breadth (m), respectively, of the flat portion of the double bottom in the way of the hold considered. B_0 is to be measured on the hull transverse section at the middle of the hold.

$T_{LC,mh}$: Draught (m) measured vertically on the hull transverse section at the middle of the hold considered, from the moulded baseline to the waterline in the loading condition considered.

Fig. 5.2.2-1 Shear Force modification, ΔQ_{mdf}

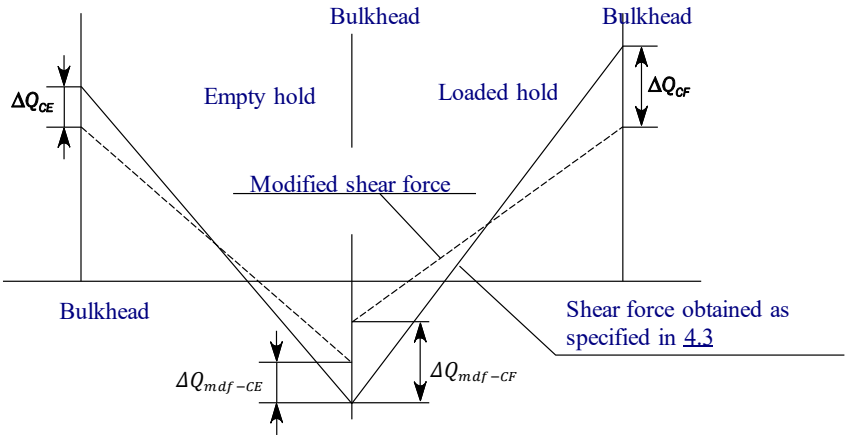

(Remarks)

ΔQ_{mdf-CF}: Shear force modification for loaded hold

ΔQ_{mdf-CE}: Shear force modification for empty hold

5.2.2.5 Compensation for Openings

Where openings are provided in the shell plating, adequate consideration is to be given to the shear strength and suitable compensation is to be made as necessary.

5.3 Buckling Strength

5.3.1 General

5.3.1.1

The requirements in 5.3 apply to platings and longitudinal stiffeners subject to the vertical bending and shear stresses amidships and contributing to longitudinal strength.

5.3.1.2

In addition to the requirements specified in 5.3.1.1 above, throughout the length of the ship, the buckling strength for members in regions where changes in the framing system or significant changes in the hull cross-section occur is to be examined in accordance with the requirements in 5.3.

5.3.1.3

Where deemed necessary by the Society to be particularly necessary, the buckling strength of members other than that specified in 5.3.1.1 and 5.3.1.2 above are to be examined.

5.3.1.4

Where calculating the buckling stresses in accordance with 5.3, the standard thickness deductions given in Table 5.3.1-1 from the gross scantlings of the members concerned are to apply according to the location.

Table 5.3.1-1 Standard Deductions

Structures	Standard Deduction (mm)	Limit Values (mm)	
		Minimum	Maximum
1. Compartments carrying dry bulk cargoes 2. One side exposed to ballast and/or liquid cargo - Vertical surfaces and surfaces sloped at an angle greater than 25° to the horizontal line	0.05 t	0.5	1.0
3. One side exposure to ballast and/or liquid cargo - Horizontal surfaces and surfaces sloped at an angle of 25° or less to the horizontal line 4. Two side exposure to ballast and/or liquid cargo - Vertical surfaces and surfaces sloped at an angle greater than 25° to the horizontal line	0.10 t	2.0	3.0
5. Two side exposure to ballast and/or liquid cargo - Horizontal surfaces and surfaces sloped at an angle of 25° or less to the horizontal line	0.15 t	2.0	4.0

(Note)

t is the thickness (mm) of structural members under consideration.

5.3.2 Working Stress

5.3.2.1

1 The compressive stress σ_a (N/mm^2) on the location under consideration in the member concerned is to be obtained from the following formula:

$$\sigma_a = \max\left(-\sigma_{HG}, \frac{30}{K}\right)$$

σ_{HG}: Vertical bending stress (N/mm^2) as specified in 5.2.1.2.

2 The working shear stress τ_a (N/mm^2) of the member under consideration is to be obtained from the following formula:

$$\tau_a = |\tau_{HG}|$$

τ_{HG}: Vertical shear stress (N/mm^2) as specified in 5.2.2.2.

5.3.3 Judgement of Buckling Strength

5.3.3.1

Platings (including web platings of longitudinal girders and stringers) and longitudinal stiffeners are to comply with the following **(1)** and **(2)**:

(1) $\sigma_C \geq \beta\sigma_a$ for compressive, bending and torsional buckling

β: Either of the following values, as applicable depending on the member

1.0: for plating and for web plating of longitudinal stiffeners

1.1: for longitudinal stiffeners

(2) $\tau_C \geq \tau_a$ for shear buckling

σ_C, τ_C: Limit compressive stress and limit shear stress (N/mm^2), to be obtained as per **Annex 5.3 "BUCKLING STRENGTH ASSESSMENT BASED ON LONGITUDINAL STRENGTH (UR S11)"** for each of the platings and stiffeners considered. The thickness obtained by subtracting the standard thickness deductions specified in **5.3.1.4** from the gross thickness of the evaluated member is to be applied.

5.4 Hull Girder Ultimate Strength

5.4.1 General

5.4.1.1 Application

Ships not less than 150 m in length L_C are to satisfy the requirements in **5.4**.

5.4.1.2 Evaluation Area

The hull girder ultimate strength is to be assessed in the cargo hold region and machinery space.

5.4.1.3 Net Scantling Approach

The hull girder ultimate strength specified in **5.4** is to be assessed using the net scantlings specified in **3.3.4**.

5.4.2 Assessment Criteria

5.4.2.1 Design Load Scenarios

The hull girder ultimate strength is to be assessed for the design load scenarios shown in **Table 5.4.2-1** according to the type of the ship.

Table 5.4.2-1 Load Scenarios

Design load scenarios	Permissible still water bending moment M_{SW-U}
Maximum load condition	M_{SV-max} or M_{SV-min}
Harbour condition	M_{PT-max} or M_{PT-min}

5.4.2.2 Assessment Formula

The hull girder ultimate strength at any hull transverse section is to satisfy the following criterion:

$$M \leq \frac{M_{U-n50}}{\gamma_R}$$

M: Vertical bending moment (kN-m) as specified in **5.4.3.1**.

M_{U-n50}: Hull girder ultimate strength (kN-m)as specified in **5.4.4.1**.

γ_R: Partial safety factor for the hull girder ultimate strength, to be taken as follows:

$\gamma_R = \gamma_M \gamma_{DB}$

γ_M: Partial safety factor for the hull girder ultimate strength considering the uncertainties of material and geometric and strength, in general, to be taken as equal to 1.05.

γ_{DB}: Partial safety factor for the hull girder ultimate strength, considering the effect of double bottom bending, to be taken as follows:

For hogging condition: $\gamma_{DB} = 1.1$, unless otherwise specified in **Part 2**.

For sagging condition: $\gamma_{DB} = 1.0$

5.4.3 Vertical Bending Moment Used for Hull Girder Ultimate Strength Assessment

5.4.3.1

The vertical bending moment M (kN-m) in the hogging and sagging conditions to be considered in the hull girder ultimate strength assessment is to be taken as follows:

$M = \gamma_s M_{SW-U} + \gamma_w M_{WV}$

M_{SW-U}: Permissible maximum and minimum still water bending moments (kN-m) at the hull transverse section under consideration, as specified in **Table 5.4.2-1**.

M_{WV}: Wave vertical bending moment (kN-m) at the hull transverse section under consideration. For the permissible maximum still water vertical bending moment, the wave vertical bending moment M_{WV-h} (kN-m) in the hogging condition as defined in **4.3.2.3** is to be taken into account. For the permissible minimum still water vertical bending moment, the wave vertical bending moment M_{WV-s} (kN-m) in the sagging condition as specified in **4.3.2.3** is to be taken into account.

γ_s: Partial safety factor for the still water bending moment, as specified in **Table 5.4.3-1**.

γ_w: Partial safety factor for the wave vertical bending moment, as specified in **Table 5.4.3-1**.

Table 5.4.3-1 Partial Safety Factors

Load scenarios	γ_s	γ_w
Maximum load condition	1.0	1.2
Harbour condition	1.2	0.0

5.4.4 Hull Girder Ultimate Strength

5.4.4.1

1 The hull girder ultimate strength M_{U-n50} (kN-m) of a hull transverse section in the hogging and sagging conditions are defined as the maximum value of a curve representing the bending moment versus the curvature χ of the hull transverse section under consideration. (*See* **Fig. 5.4.4-1**)

2 The net scantlings taking into account the corrosion addition of $0.5t_c$ (mm) are to be used to calculate the hull girder ultimate strength.

Fig. 5.4.4-1 Bending Moment Capacity vs. Curvature χ

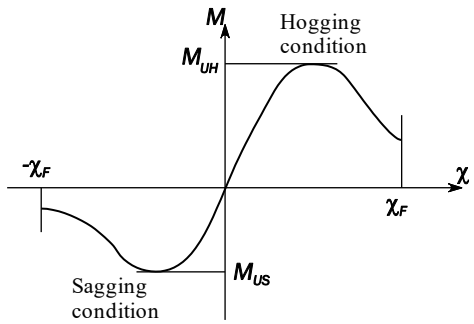

3 The curvature χ is positive for the hogging condition and negative for the sagging condition.

4 The hull girder ultimate strength M_{U-n50} is to be calculated according to **Annex 5.4 "HULL GIRDER ULTIMATE STRENGTH"**.

5.4.4.2

The effective area for the hull girder ultimate strength assessment is specified in **5.2.1.4**.

5.5 Torsional Strength

5.5.1 General

5.5.1.1 Application

In cases where the widths of hatchways amidships exceed 0.7B, torsional strength assessments are to be carried out in accordance with the following requirements as applicable depending on the type of the ship. The distances between the outermost lines of hatchway openings are to be taken as the widths of hatchways in cases where the ship has two or more rows of hatchways.

(1) For container carriers: Requirements for container carriers in **Part 2-1**

(2) For ships other than container carriers: Requirements for box-shaped bulk carriers in **Part 2-2**

Annex 5.1 EXTENT OF HIGH TENSILE STEEL

An1 Extent of High Tensile Steel Use

An1.1 General

An1.1.1

This Annex provides reference requirements for setting the extent of high tensile steel use at the time of design.

An1.2 Vertical Extent

An1.2.1

The vertical extent (m) of high tensile steel $z_{hts,i}$ use in the deck zone or bottom zone, respectively, from the deck or the baseline, is not to be taken less than the value obtained from the following formula. (*See* **Fig. An1**)

$$z_{hts,i} = z_1\left(1 - \frac{\sigma_{perm,i}}{\sigma_L}\right)$$

z_1: Distance (m) from the horizontal neutral axis to the deck or the baseline.

$\sigma_{perm,i}$: Permissible vertical bending stress (N/mm^2) of the steel under consideration as given in **Table 5.2.1-2** and **Fig. An1**.

σ_L: Vertical bending stress σ_{dk} (N/mm^2) at the deck or σ_{bl} (N/mm^2) at the baseline as given in **Table An1**.

Table An1 Stresses at Baseline and Deck

Condition	Baseline	Deck
Seagoing	$\sigma_{bl} = \frac{\lvert M_{SW} + M_{WV} \rvert}{I_{y-n50}} z_n \times 10^{-3}$	$\sigma_{dk} = \frac{\lvert M_{SW} + M_{WV} \rvert}{I_{y-n50}} V_D \times 10^{-3}$
Operation in harbor/sheltered water	$\sigma_{bl} = \frac{\lvert M_{SW-p} \rvert}{I_{y-n50}} z_n \times 10^{-3}$	$\sigma_{dk} = \frac{\lvert M_{SW-p} \rvert}{I_{y-n50}} V_D \times 10^{-3}$
V_D: Refer to **5.2.1.2**		

Fig. An1 Example of Vertical Extent of High Tensile Steel

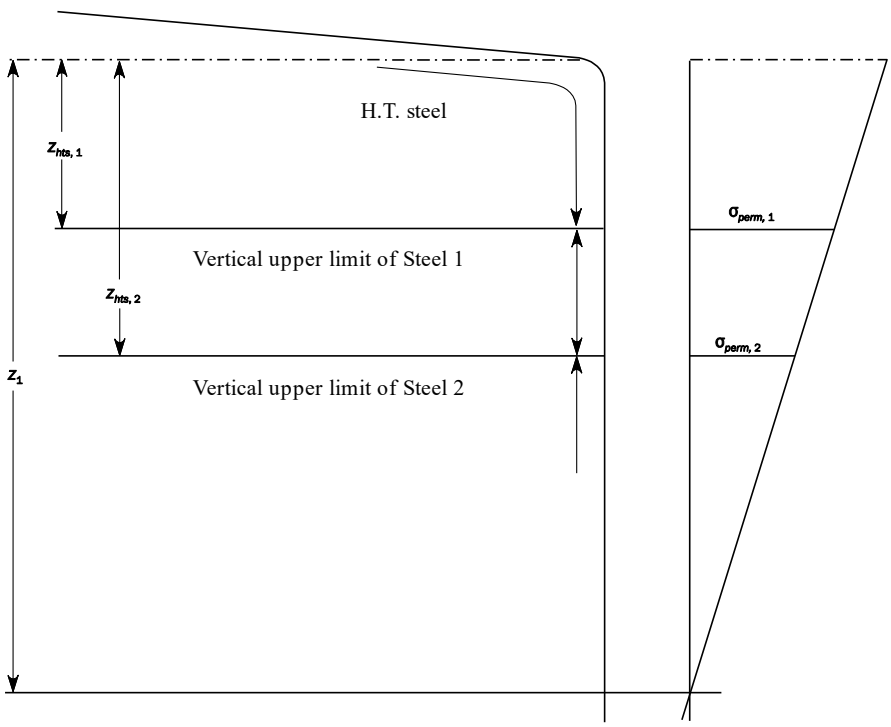

An1.3 Longitudinal Extent

An1.3.1

Where used, the application of high tensile steel is to be continuous over the length of the ship to the location where the vertical bending stress levels are within the allowable range for a mild steel structure, as shown in **Fig. An2**.

Fig. An2 Longitudinal Extent of High Tensile Steel

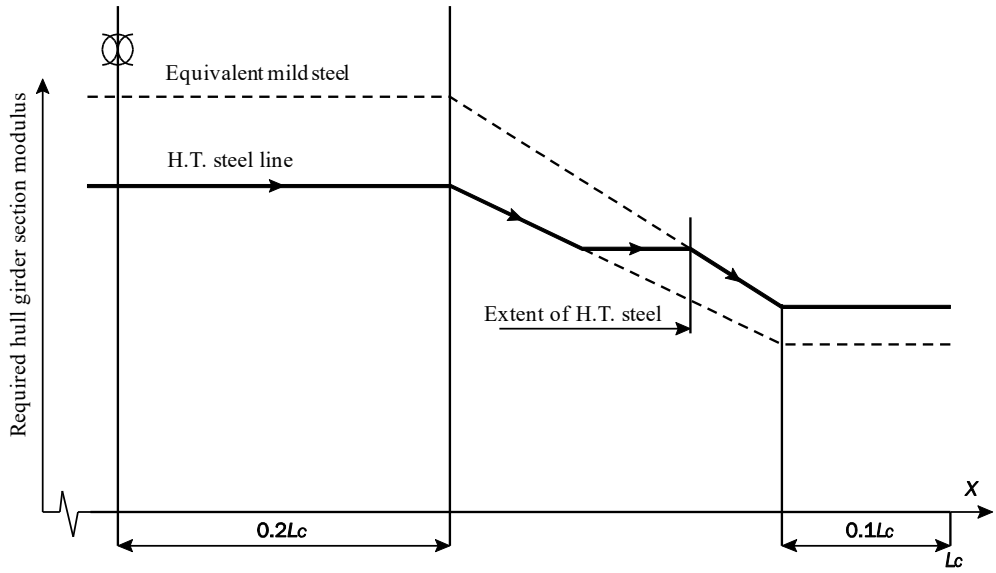

Annex 5.2 CALCULATION OF SHEAR FLOW

An1. General

An1.1 General

An1.1.1

This Annex specifies the procedures for direct calculation of the shear flow which is working along a ship cross section due to hull girder vertical shear force. Shear flow q_v, at each location in the cross section, is calculated where considering the cross section is subjected to unit vertical shear force, 1 *N*, in the direction of z coordinate. The unit shear flow per milimetre, q_v, in *N/mm*, can be considered equal to:

$q_v = q_D + q_I$

q_D: Determinate shear flow, as defied in **An2.1**.

q_I: Indeterminate shear flow which circulates around the closed cells, as defined in **An3.1**.

In the calculation of the unit shear flow, q_v, the longitudinals are to be taken into account.

An2. Determinate Shear Flow

An2.1 Determinate Shear Flow

An2.1.1

The determinate shear flow q_D, in *N/mm*, at each location in the cross section can be obtained from the following line integration:

$$q_D(s) = -\frac{1}{I_y}\int_0^S (z - z_n)t ds \times 10^{-6}$$

S: Coordinate value of running coordinate along the cross section, in m.

I_y: Moment of inertia of the cross section, in m^4.

t: Thickness of plating, in mm.

z_n: *Z*-coordinate of the horizontal neutral axis from the baseline, in m.

It is assumed that the cross section is composed of line segments as shown in **Fig. An1**, where each line segment has a constant plate net thickness. The determinate shear flow is obtained by the following equation:

$$q_{Dk} = -\frac{t\ell}{2I_y}(z_k + z_i - 2z_n) \times 10^{-6} + q_{Di}$$

q_{Dk}, q_{Di}: Determinate shear flow at node *k* and node *i*, respectively, in *N/mm*.

ℓ: Length of line segments, in *m*.

y_k, y_i: *Y*-coordinate of the end points *k* and *i* of the line segment, in m, as defined in **Fig. An1**.

z_k, z_i: *Z*-coordinate of the end points *k* and *i* of the line segment, in m, as defined in **Fig. An1**.

Where the cross section includes closed cells, the closed cells are to be cut with virtual slits, as shown in **Fig. An2**, in order to obtain the determinate shear flow. However, the virtual slits are not to be located at the walls by which the other closed cell is also bounded. Calculations of the determinate shear flow at bifurcation points can be calculated such as water flow calculations, as shown in **Fig. An2**.

Fig. An1 Definition of Line Segment

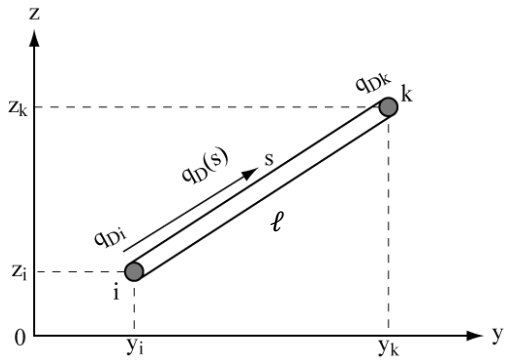

Fig. An2 Calculation of Determinate Shear Flow at Bifurcation

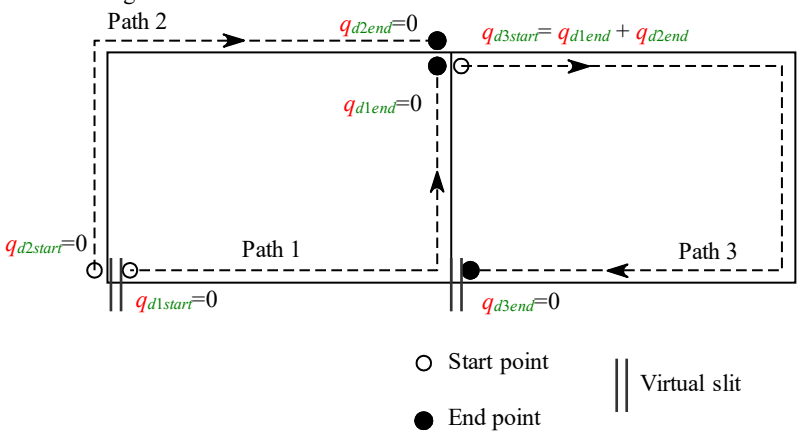

An3. Indeterminate Shear Flow

An3.1 Indeterminate Shear Flow

An3.1.1

The indeterminate shear flow is working around the closed cells and can be considered as a constant value within the same closed cell. The following system of equation for determination of indeterminate shear flows can be developed. In the equations, contour integrations of several parameters around all closed cells are performed.

$$q_{Ic}\oint_c \frac{1}{t}ds - \sum_{m=i}^{Nw} q_{Im} \oint_{c\&m} \frac{1}{t}ds = -\oint_c \frac{q_D}{t}ds$$

Nw: Number of common walls shared by cell c and all other cells.

c,m: Common wall shared by cells c and m.

q_{Ic}, q_{Im}: Indeterminate shear flow around the closed cell c and m, respectively, in N/mm.

Under the assumption of the assembly of line segments shown in **Fig. An1** and a constant plate thickness of each line segment, the above equation can be expressed as follows:

$$q_{Ic}\sum_{j=1}^{Nc}\left(\frac{l}{t}\right)_j - \sum_{m=1}^{Nw}\left\{q_{Im}\left[\sum_{j=1}^{Nm}\left(\frac{l}{t}\right)_j\right]_m\right\} = -\sum_{j=1}^{Nc}\phi_j$$

$$\phi_j = \left[-\frac{l^2}{6I_y}(z_k + 2z_i - 3z_n)\times 10^{-3} + \frac{l}{t}q_{Di}\right]_j$$

Nc: Number of line segments in cell c.

Nm: Number of line segments on the common wall shared by cells c and m.

q_{Di}: Determinate shear flow, in N/mm, calculated according to **An2.1.1**.

The difference in the directions of running coordinates specified in **An2.1.1** is to be considered.

Fig. An3 Closed Cells and Common Wall

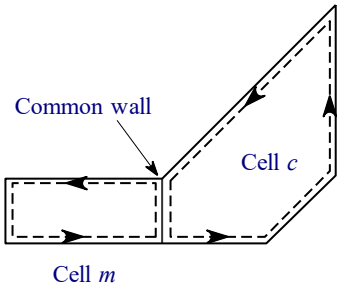

An4. Computation of Sectional Properties

An4.1 Computation of Sectional Properties

An4.1.1

Properties of the cross section are to be obtained by the following formulae, where the cross section is assumed as the assembly of line segments:

$$l = \sqrt{(y_k - y_i)^2 + (z_k - z_i)^2}$$

$$a = lt \times 10^{-3} \qquad A = \sum a$$

$$s_y = \frac{a}{2}(z_k + z_i) \qquad s_y = \sum s_y$$

$$i_{y0} = \frac{a}{3}({z_k}^2 + z_k z_i + {z_i}^2) \qquad i_{y0} = \sum i_{y0}$$

$a_{net} = 10^{-3} lt_{net}$ $s_{y\text{-}net} = \frac{a_{net}}{2}(z_k + z_i)$ $i_{y0\text{-}net} = \frac{a_{net}}{3}(z_k^2 + z_k z_i + z_i^2)a$, A: Area of the line segment and the cross section, respectively, in m^2.

s_y, S_y: First moment of the line segment and the cross section about the baseline, in m^3.

i_{y0}, I_{y0}: Moment of inertia of the line segment and the cross section about the baseline, in m^4.

The height of the horizontal neutral axis z_n, in m, is to be obtained as follows:

$$z_n = \frac{S_y}{A}$$

The moment of inertia about the horizontal neutral axis, in m^4, is to be obtained as follows:

$$I_y = I_{y0} - {z_n}^2 A$$

Annex 5.3 BUCKLING STRENGTH ASSESSMENT BASED ON LONGITUDINAL STRENGTH (UR S11)

Symbols

a: Length (mm) of the longer side of the plate panel.

b: Length (mm) of the shorter side of the plate panel.

t_p: Thickness (mm) of the plate panel.

l: Span (mm) of longitudinal stiffeners.

s: Spacing (mm) of longitudinal stiffeners.

h_w: Web height (mm).

t_w: Web thickness (mm).

b_f: Width of face plate (mm).

t_f: Thickness (mm) of face plate.

For bulb plates, the mean thickness is to be used.

σ_{Yp}: Yield stress (N/mm^2) of plating.

σ_{Ys}: Yield stress (N/mm^2) of stiffener.

E: Young's modulus (N/mm^2), taken as 2.06×10^5.

ν: Poisson's ratio, taken as 0.3.

An1 General

An1.1 Overview

An1.1.1

1 This Annex specifies the methods for obtaining the critical buckling stresses used in the buckling strength assessment for longitudinal strength.

2 In this Annex, compressive stress values are to be taken as positive while tensile stress values are to be taken as negative.

An2 Buckling Strength of Plates

An2.1 General

An2.1.1

1 The critical stress of a plate under assessment is to be obtained by the methods described in **An2.2**.

2 Notwithstanding **-1** above, the critical stress of plating for a transverse framing system may be obtained by the methods described in **An2.3**.

An2.2 Critical Stresses of Plates

An2.2.1 Critical Compressive Stress

The critical compressive stress σ_c of the plate is to be obtained in accordance with the following **(1)** and **(2)**:

(1) The elastic compressive buckling stress σ_E (N/mm^2) of the plate is to be taken according to the following formula:

$$\sigma_E = 0.9 K_m E \left(\frac{t_p}{b}\right)^2$$

K_m :For a plate for a longitudinal framing system, K_m is to be taken according to the following formula:

$$K_m = \frac{8.4}{\Psi + 1.1}$$

For a plate for a transverse framing system, K_m is to be taken according to the following formula:

$$K_m = c\left[1 + \left(\frac{b}{a}\right)^2\right]^2 \frac{2.1}{\Psi + 1.1}$$

where:

Ψ: Ratio between the minimum stress and the maximum compressive stress σ_a working on the plate under consideration (*See* **Fig. An1**). However, $0 \leq \Psi \leq 1$.

c: Value depending on the kind of stiffeners at the compressive side, as follows:

When plating is stiffened by girders: 1.30

When stiffeners are angles or T-sections: 1.21

When stiffeners are bulb plates: 1.10

When stiffeners are flat bars: 1.05

(2) The critical compressive stress σ_c (N/mm^2) is to be taken by the following formula:

When $\sigma_E \leq \sigma_{Yp}/2$:

$$\sigma_c = \sigma_E$$

When $\sigma_E > \sigma_{Yp}/2$:

$$\sigma_c = \sigma_{Yp}(1 - \frac{\sigma_{Yp}}{4\sigma_E})$$

Fig. An1

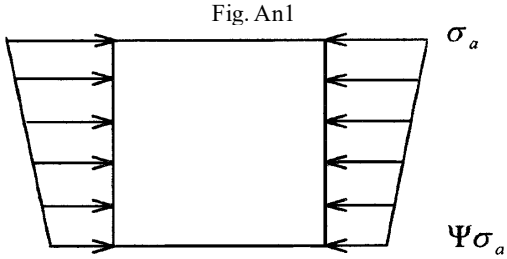

An2.2.2 Critical Shear Stress

The critical shear stress τ_C (N/mm^2) of the plate is to be obtained in accordance with the following **(1)** and **(2)**:

(1) The elastic shear buckling stress τ_E (N/mm^2) of the plate is to be taken according to the following formula:

$$\tau_E = 0.9k_t E\left(\frac{t_p}{b}\right)^2$$

k_t: According to the following formula:

$$k_t = 5.34 + 4\left(\frac{b}{a}\right)^2$$

(2) The critical shear buckling stress τ_C (N/mm^2) is to be taken according to the following equations:

When $\tau_E \leq \frac{\tau_Y}{2}$:

$$\tau_c = \tau_E$$

When $\tau_E > \frac{\tau_Y}{2}$:

$$\tau_c = \tau_Y(1 - \frac{\tau_Y}{4\tau_E})$$

τ_Y: Shear yield stress (N/mm^2), to be taken according to the following formula:

$$\tau_Y = \frac{\sigma_{Yp}}{\sqrt{3}}$$

An2.3 Alternative Requirements for Plates for Transverse Framing System

An2.3.1 General

1 For plates for the transverse framing system, critical stress may be obtained by the methods specified in **An2.3.2**. However, compressive stress σ_a working on a plate is to be taken as the average compressive stress working on that plate, and the edge stress ratio ψ specified in **Table An1** may be deemed as 1.

2 When obtaining the critical stress of plating in accordance with **An2.3.2**, the requirements regarding the hull girder ultimate strength assessment, shown in **5.4** for the transverse section of the hull in which that plating is located, are also to be satisfied.

An2.3.2 Critical Compressive Stress and Critical Shear Stress

The critical compressive stress σ_c (N/mm^2) and critical shear stress τ_c (N/mm^2) of the plating are to be taken as follows:

$$\sigma_c = C_y\sigma_{Yp}$$

$\tau_c = C_\tau \frac{\sigma_{Yp}}{\sqrt{3}}$

C_y, C_τ: Reduction factors specified in **Table An1**. The plating is to be considered as simply supported as shown in Cases 2 and 15. A more appropriate boundary conditions may be applied subject to approval by the Society. The following formulae are to be used for c_1 and the reference degree of slenderness λ, which are used to calculate C_y and C_τ:

$c_1 = \left(1 - \frac{1}{\alpha}\right) \geq 0$

α: Aspect ratio of the panel, to be taken as follows:

$\alpha = \frac{a}{b}$

$\lambda = \sqrt{\frac{\sigma_{YP}}{K\sigma_{E1}}}$

K: Buckling factor K_y or K_τ specified in **Table An1**. However, the buckling factor K_y calculated based on Case 2 in **Table An1** is to be multiplied by the correction factor F_{tran}. The correction factor F_{tran} is to be taken as follows:

- For plate panels of the side shell:
  - When two adjacent frames are supported by one tripping bracket fitted in the adjacent plating: F_{tran} = 1.25
  - When two adjacent frames are supported by two tripping brackets fitted in the adjacent plating: F_{tran} = 1.33
  - Elsewhere: F_{tran} = 1.15
- For plate panels other than the side shell, when the ends of stiffeners arranged on the longer side of the plate panels have lug-connections: F_{tran}=1.15
- Elsewhere: F_{tran} = 1

σ_{E1} :Elastic buckling reference stress (N/mm^2), to be taken as follows:

$\sigma_{E1} = \frac{\pi^2 E}{12(1-\nu^2)}\left(\frac{t_p}{b}\right)^2$

Table An1 Buckling Factor and Reduction Factor

Case	Stress ratio ψ	Aspect ratio α	Buckling factor K	Reduction factor C
2 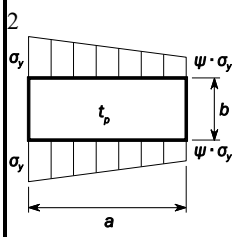	$1 \geq \psi \geq 0$		$K_y = F_{tran}\frac{2\left(1+\frac{1}{\alpha^2}\right)^2}{1+\psi+\frac{(1-\psi)}{100}\left(\frac{2.4}{\alpha^2}+6.9f_1\right)}$	When $\sigma_y \leq 0$: $C_y = 1$ When $\sigma_y > 0$: $C_y = c\left(\frac{1}{\lambda} - \frac{R+F^2(H-R)}{\lambda^2}\right)$ Where: $c = (1.25 - 0.12\psi) \leq 1.25.$ $R = \lambda(1-\lambda/c)$ for $\lambda < \lambda_c$: $R = 0.22$ for $\lambda \geq \lambda_c$ $\lambda_c = 0.5c\left(1+\sqrt{1-0.88/c}\right)$ $F = \left[1-\left(\frac{K}{0.91}-1\right)/\lambda_p^2\right]c_1 \geq 0.$ $\lambda_p^2 = \lambda^2 - 0.5$ for $1 \leq \lambda_p^2 \leq 3.$
		$\alpha \leq 6$	$f_1 = (1-\psi)(\alpha-1)$	
		$\alpha > 6$	$f_1 = 0.6(1-\frac{6\psi}{\alpha})(\alpha+\frac{14}{\alpha})$ but not greater than $14.5 - \frac{0.35}{\alpha^2}$.	
			$K_y = \frac{200F_{tran}\left(1+\beta^2\right)^2}{(1-f_3)(100+2.4\beta^2+6.9f_1+23f_2)}$	
		$\alpha > 6(1-\psi)$	$f_1 = 0.6(\frac{1}{\beta}+14\beta)$ but not greater than $14.5 - 0.35\beta^2$. $f_2 = f_3 = 0$	

	$0 \ge \psi \ge 1-\frac{4\alpha}{3}$	$3(1-\psi) \le \alpha \le 6(1-\psi)$	$f_1 = \frac{1}{\beta} - 1$ $f_2 = f_3 = 0$	c_1, as specified in **An2.3.2**. $H = \lambda - \frac{2\lambda}{c(T+\sqrt{T^2-4})} \ge R$ $T = \lambda + \frac{14}{15\lambda} + \frac{1}{3}$
		$1.5(1-\psi) \le \alpha < 3(1-\psi)$	$f_1 = \frac{1}{\beta} - (2-\omega\beta)^4 - 9(\omega\beta-1)(\frac{2}{3}-\beta)$ $f_2 = f_3 = 0$	
		$1-\psi \le \alpha < 1.5(1-\psi)$	• For $\alpha > 1.5$: $f_1 = 2\left(\frac{1}{\beta} - 16(1-\frac{\omega}{3})^4\right)\left(\frac{1}{\beta}-1\right)$ $f_2 = 3\beta - 2$ $f_3 = 0$ • For $\alpha \le 1.5$ $f_1 = 2\left(\frac{1.5}{1-\psi} - 1\right)\left(\frac{1}{\beta}-1\right)$ $f_2 = \frac{\psi(1-16f_4^2)}{1-\alpha}$ $f_3 = 0$ $f_4 = (1.5 - Min(1.5;\alpha))^2$	
		$0.75(1-\psi) \le \alpha < 1-\psi$	$f_1 = 0$ $f_2 = 1 + 2.31(\beta-1) - 48\left(\frac{4}{3}-\beta\right)f_4^2$ $f_3 = 3f_4(\beta-1)\left(\frac{f_4}{1.81} - \frac{\alpha-1}{1.31}\right)$ $f_4 = (1.5 - Min(1.5;\alpha))^2$	
	$\psi < 1-\frac{4\alpha}{3}$		$K_y = 5.972F_{tran}\frac{\beta^2}{1-f_3}$ where: $f_3 = f_5\left(\frac{f_5}{1.81} + \frac{1+3\psi}{5.24}\right)$ $f_5 = \frac{9}{16}(1+Max(-1;\psi))^2$	
15 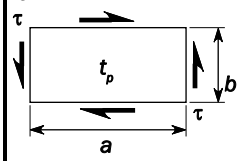 	–		$K_\tau = \sqrt{3}\left[5.34 + \frac{4}{\alpha^2}\right]$	$C_\tau = 1$ for $\lambda \le 0.84$ $C_\tau = \frac{0.84}{\lambda}$ for $\lambda > 0.84$

Note 1: The cases shown above are general cases. The stress components (σ_x, σ_y) are to be understood as local coordinates.

An3 Buckling Stress of Stiffeners

An3.1 Critical Compressive Stress

An.3.1.1

The critical compressive stress σ_c (N/mm^2) of stiffeners is to be obtained in accordance with **(4)** using the elastic buckling stress σ_E (N/mm^2) obtained from the following **(1)** to **(3)**:

(1) The elastic compressive buckling stress σ_E (N/mm^2) of stiffeners is to be taken according to the following formula:

$$\sigma_E = 10E\frac{I_a}{Al^2} \times 10^2$$

I_a: Moment of inertia (cm^4) of stiffeners, including the attached plating.

A: Cross-sectional area (cm^2) of longitudinal stiffeners, including stiffeners and attached plating.

(2) Elastic torsional buckling stress σ_E (N/mm^2) of stiffeners is to be taken according to the following formula:

$$\sigma_E = \frac{\pi^2 E I_w}{I_P l^2}\left(m^2 + \frac{K_w}{m^2}\right) \times 10^2 + 0.385E\frac{I_t}{I_P}$$

I_t: St. Venant's moment of inertia (cm^4) obtained according to the shape of stiffeners, which is given by the following:

$$I_t = \frac{h_w {t_w}^3}{3} \times 10^{-4} \text{ for flat bars}$$

$$I_t = \frac{1}{3}\left[h_w {t_w}^3 + b_f {t_f}^3\left(1 - 0.63\frac{t_f}{b_f}\right)\right] \times 10^{-4} \text{ for flanged stiffeners}$$

I_p: Polar moment of inertia (cm^4) obtained according to the shape of stiffeners, which is given by the following:

$$I_P = \frac{{h_w}^3 t_w}{3} \times 10^{-4} \text{ for flat bars}$$

$$I_P = \left(\frac{{h_w}^3 t_w}{3} + {h_w}^2 b_f t_f\right) \times 10^{-4} \text{ for flanged longitudinal stiffeners}$$

I_w: Sectorial moment of inertia (cm^6) obtained according to the shape of stiffeners, which is given by the following:

$$I_w = \frac{{h_w}^3 {t_w}^3}{36} \times 10^{-6} \text{ for flat bars}$$

$$I_w = \frac{t_f {b_f}^3 {h_w}^2}{12} \times 10^{-6} \text{ for T-sections}$$

$$I_w = \frac{{b_f}^3 {h_w}^2}{12(b_f + h_w)^2}\left[t_f\left({b_f}^2 + 2b_f h_w + 4{h_w}^2\right) + 3t_w b_f h_w\right] \times 10^{-6} \text{ for angles and bulb plates}$$

K_w: According to the following formula:

$$K_w = \frac{Cl^4}{\pi^4 E I_w} \times 10^{-6}$$

C: According to the following formula:

$$C = \frac{k_P E {t_P}^3}{3s\left(1 + \frac{1.33 k_P h_w {t_P}^3}{s {t_w}^3}\right)} \quad (N)$$

k_P: As given by the following formula, but if it is less than zero, is to be 0. For stiffeners with flanges, this value need not be taken as less than 0.1:

$$k_P = 1 - \eta_P$$

η_P: According to the following formula:

$$\eta_P = \frac{\sigma_a}{\sigma_{EP}}$$

σ_a: Compressive stress working on stiffeners due to the hull girder load, as specified in **5.3.2.1**.

σ_{EP}: Elastic compressive buckling stress of steel plates attached with stiffeners, as calculated in **An2.2.1(1)**.

m: Value depending on the value of K_w, as given in **Table An2**.

(3) Elastic compressive buckling stress σ_E (N/mm^2) of the web plate of stiffeners is to be taken according to the following formula:

$$\sigma_E = 3.8E\left(\frac{t_w}{h_w}\right)^2$$

(4) Critical compressive stress σ_c (N/mm^2) is to be taken according to the following formula:

$$\sigma_c = \sigma_E \text{ for } \sigma_E \le \sigma_{Ys}/2$$

$$\sigma_c = \sigma_{Ys}\left(1 - \frac{\sigma_{Ys}}{4\sigma_E}\right) \text{ for } \sigma_E > \sigma_{Ys}/2$$

Table An2 Values of m

	$0<K_w<4$	$4\leq K_w<36$	$36\leq K_w<144$	$(m-1)^2m^2 \leq K_w < m^2(m+1)^2$
m	1	2	3	m

An3.2 Degree of Slenderness of Stiffener Flanges

An3.2.1

Flanges on angles and T-sections of stiffeners are to comply with the following formula:

$$\frac{b_f'}{t_{f-gr}} \leq 15$$

b_f' : Flange width (mm) for angles, half flange width for T-sections.

t_{f-gr}: Gross scantlings of flange (mm).

Annex 5.4 HULL GIRDER ULTIMATE STRENGTH

Symbols

For symbols not specified in this Annex, refer to 1.4.

I_y: Moment of inertia (cm^4) of the hull transverse section under consideration around its horizontal neutral axis, to be calculated in accordance with 5.2.1.3.

Z_B, Z_D: Section moduli (cm^3) at bottom and deck, respectively, as specified in 5.2.1.3.

σ_{Ys}: Specified minimum yield stress (N/mm^2) of the material of the stiffener under consideration.

σ_{Yp}: Specified minimum yield stress (N/mm^2) of the material of the plate under consideration.

A_s: Net sectional area (cm^2) of stiffener, without attached plating.

A_p: Net sectional area (cm^2) of attached plating.

z_i: z coordinate (m) of the centre of gravity of the i-th element.

An1. General

An1.1 Application

An1.1.1

This Annex provides the criteria for obtaining the following hull girder ultimate strengths in **(1)** and **(2)** below:

(1) M_U to be used in the hull girder ultimate strength assessment according to 5.4.

(2) M_U to be used in the hull girder ultimate strength assessment according to An2.3, Annex 5.3 **"BUCKLING STRENGTH ASSESSMENT BASED ON LONGITUDINAL STRENGTH (UR S11)".**

An1.1.2

The hull girder ultimate strength M_U is defined as the maximum bending moment of the hull girder beyond which the hull structure collapses. Hull girder failure depends on the buckling, ultimate strength and yielding of longitudinal hull girder structural members.

An1.2 Methods

An1.2.1 Incremental-iterative Method

The hull girder ultimate strength is to be assessed by the incremental-iterative method specified in An2.

An1.2.2 Alternative Methods

1 Application of alternative methods is to be agreed upon by the Society prior to commencement.

2 Principles for alternative methods for the calculation of the hull girder ultimate strength, for example, nonlinear finite element analysis, are given in An3. The use of alternative methods may require reevaluation of the partial safety factors.

3 Documentation of the analysis methodology and detailed comparison of its results are to be submitted to the Society for review and acceptance.

An1.3 Assumptions

An1.3.1

The method for calculating the hull girder ultimate strength is to identify the critical failure modes of all main longitudinal hull girder structural members.

An1.3.2

Structures compressed beyond their buckling limit have a reduced load carrying capacity. All relevant failure modes for individual structural elements, such as plate buckling, torsional stiffener buckling, stiffener web buckling, lateral or global stiffener buckling and their interactions, are to be considered in order to identify the weakest inter-frame failure mode.

An1.3.3

Only vertical bending is considered. The effects of vertical shear force, torsional loading, horizontal bending moment and lateral pressure are neglected.

An2. Incremental-iterative Method

An2.1 Assumptions

An2.1.1

In applying the procedure specified in **An2.2**, the following assumptions are generally to be made:

- The hull girder ultimate strength is calculated at hull transverse sections between two adjacent transverse webs.
- The hull girder transverse section remains plane during each curvature increment.
- The hull material has elasto-plastic behaviour.
- The hull girder transverse section is divided into a set of elements, which are considered to act independently.

These elements are:

- Transversely framed plating panels and/or stiffeners attached to plating, whose structural behaviour is as specified in **An2.3.1**.
- Hard corners, constituted by plating crossing, whose structural behaviour is as specified in **An2.3.2**.
- According to the iterative procedure, the bending moment M_i acting on the transverse section at each curvature value χ_i is obtained by summing the contribution given by the stress σ acting on each element. The stress σ corresponding to the element strain ε is to be obtained for each curvature increment from the non-linear load-end shortening curves σ–ε of the element.

These curves are to be calculated, for the failure mechanisms of the element, from the formulae specified in **An2.3**. The stress σ is selected as the lowest among the values obtained from each of the load-end shortening curves $\sigma - \varepsilon$ under consideration.

The procedure is to be repeated until the value of the imposed curvature reaches the value χ_F (m^{-1}) in hogging and sagging conditions and obtained from the following formula:

$$\chi_F = \pm 3 \frac{M_Y}{EI_y} \times 10^3$$

where:

M_Y: Lesser of the values M_{Y1} and M_{Y2} (kN-m)

$$M_{Y1} = \sigma_Y Z_B \times 10^{-3}$$

$$M_{Y2} = \sigma_Y Z_D \times 10^{-3}$$

If the value χ_F is not sufficient to evaluate the peaks of the curve $M - \chi$, the procedure is to be repeated until the value of the imposed curvature permits the calculation of the maximum bending moments of the curve.

An2.2 Procedure

An2.2.1 General

(1) The curve $M - \chi$ is to be obtained by means of an incremental-iterative approach as summarised in the flow chart in **Fig. An1**.

(2) In this procedure, the hull girder ultimate strength M_U is defined as the peak value of the curve with vertical bending moment M versus the curvature χ of the ship cross section (*See* **Fig. An1**). The curve is to be obtained through an incremental-iterative approach.

(3) Each step of the incremental procedure is represented by the calculation of the bending moment M_i which acts on the hull transverse section as the effect of the imposed curvature χ_i.

(4) For each step, the value χ_i is to be obtained by adding an increment of curvature $\Delta\chi$ to the value relevant to the previous step χ_{i-1}. This increment of curvature corresponds to an increment of the rotation angle of the hull girder transverse section around its horizontal neutral axis.

(5) This rotation increment induces axial strains ε in each hull structural element, whose value depends on the position of the element. In the hogging condition, the structural elements above the neutral axis are lengthened, while the elements below the neutral axis are shortened, and vice-versa in the sagging condition.

(6) The stress σ induced in each structural element by the strain ε is to be obtained from the load-end shortening curve $\sigma - \varepsilon$ of the element, which takes into account the behaviour of the element in the non-linear elasto-plastic domain.

(7) The distribution of the stresses induced in all the elements composing the hull transverse section determines, for each step, a variation of the neutral axis position, since the stress-strain relationship $\sigma - \varepsilon$ is non-linear. The new position of the neutral axis relevant to the step under consideration is to be obtained by means of an iterative process, imposing the equilibrium among the stresses acting in all the hull elements.

(8) Once the position of the neutral axis is known and the relevant stress distribution in the section structural elements is obtained, the bending moment of the section M_i around the new position of the neutral axis, which corresponds to the curvature χ_i imposed in the step under consideration, is to be obtained by summing the contribution given by each element stress.

(9) The main steps of the incremental-iterative approach described above are summarised as follows (*See* also **Fig. An1**):

(a) Step 1: Divide the transverse section of the hull into stiffened plate elements.

(b) Step 2: Define stress-strain relationships for all elements, as shown in **Table An1**.

(c) Step 3: Initialise curvature χ and the neutral axis for the first incremental step with the value of the incremental curvature (i.e. curvature that induces a stress equal to 1% of yield strength in strength deck) as follows:

$$\chi_1 = \Delta\chi = 0.01\frac{\sigma_Y}{E}\frac{1}{z_D - z_n}$$

where

z_D: z coordinate (m) of strength deck at side, with respect to a reference coordinate, as defined in **1.4.3.6**.

(d) Step 4: Calculate for each element the equivalent strain $\epsilon_i = \chi(z_i - z_n)$ and the equivalent stress σ_i.

(e) Step 5: Determine the position of the neutral axis $z_{\mathrm{NA-cur}}$ at each incremental step by establishing force equilibrium over the whole transverse section as follows:

$$\sum A_i\sigma_i = \sum A_j\sigma_j$$

(The i-th element is under compression while the j-th element is under tension.)

(f) Step 6: Calculate the equivalent moment by summing the contributions of all elements as follows:

$$M_U = \sum \sigma_{Ui}A_i|z_i - z_{NA-cur}| \times 10^{-1}$$

(g) Step 7: Compare the moment in the current incremental step with the moment in the previous incremental step. If the slope in the $M - \chi$ relationship is less than a negative fixed value, terminate the process and define the peak value of M_U. Otherwise, increase the curvature by the amount of $\Delta\chi$ and go to Step 4.

An2.2.2 Modelling of the Hull Girder Cross Section

Hull girder transverse sections are to be considered as being constituted by the members contributing to the hull girder ultimate strength. Sniped stiffeners are also to be modelled, taking into account that they do not contribute to the hull girder strength. The structural members are categorised into a stiffener element, a stiffened plate element, or a hard corner element.

The plate panel, including the web plate of the girder or side stringer, is categorised into either a stiffened plate element, an attached plate of a stiffener element, or a hard corner element.

The plate panel is categorised into the following two kinds:

- Longitudinally stiffened panel of which the longer side is in the longitudinal direction
- Transversely stiffened panel of which the longer side is in the perpendicular direction to the longitudinal direction

(a) Hard corner element:

Hard corner elements are sturdier elements composing the hull girder transverse section, which collapse mainly due to an elasto-plastic mode of failure (material yielding); they are generally constituted by two plates not lying in the same plane. The extent of a hard corner element from the point of intersection of the plates is taken equal to $20t$ on a transversely stiffened panel and to $0.5s$ on a longitudinally stiffened panel (*See* **Fig. An2**).

where:

t: Thickness (mm) of the panel

s: Spacing (mm) of the adjacent longitudinal stiffener

Bilge, sheer strake-deck stringer elements, girder-deck connections and face plate-web connections on large girders are typical hard corners. Enlarged stiffeners, with or without web stiffening, used for Permanent Means of Access (*PMA*) are not to be considered as a large girder, so the attached plate/web connection is only considered as a hard corner.

(b) Stiffener element:

The stiffener constitutes a stiffener element together with the attached plate.

The attached plate width is in principle as follows:

- Equal to the mean spacing of the stiffener when the panels on both sides of the stiffener are longitudinally stiffened
- Equal to the width of the longitudinally stiffened panel when the panel on one side of the stiffener is longitudinally stiffened and the other panel is transversely stiffened (*See* **Fig. An2**)

Fig. An1 Flow Chart of the Procedure for the Evaluation of the Curve $M-\chi$

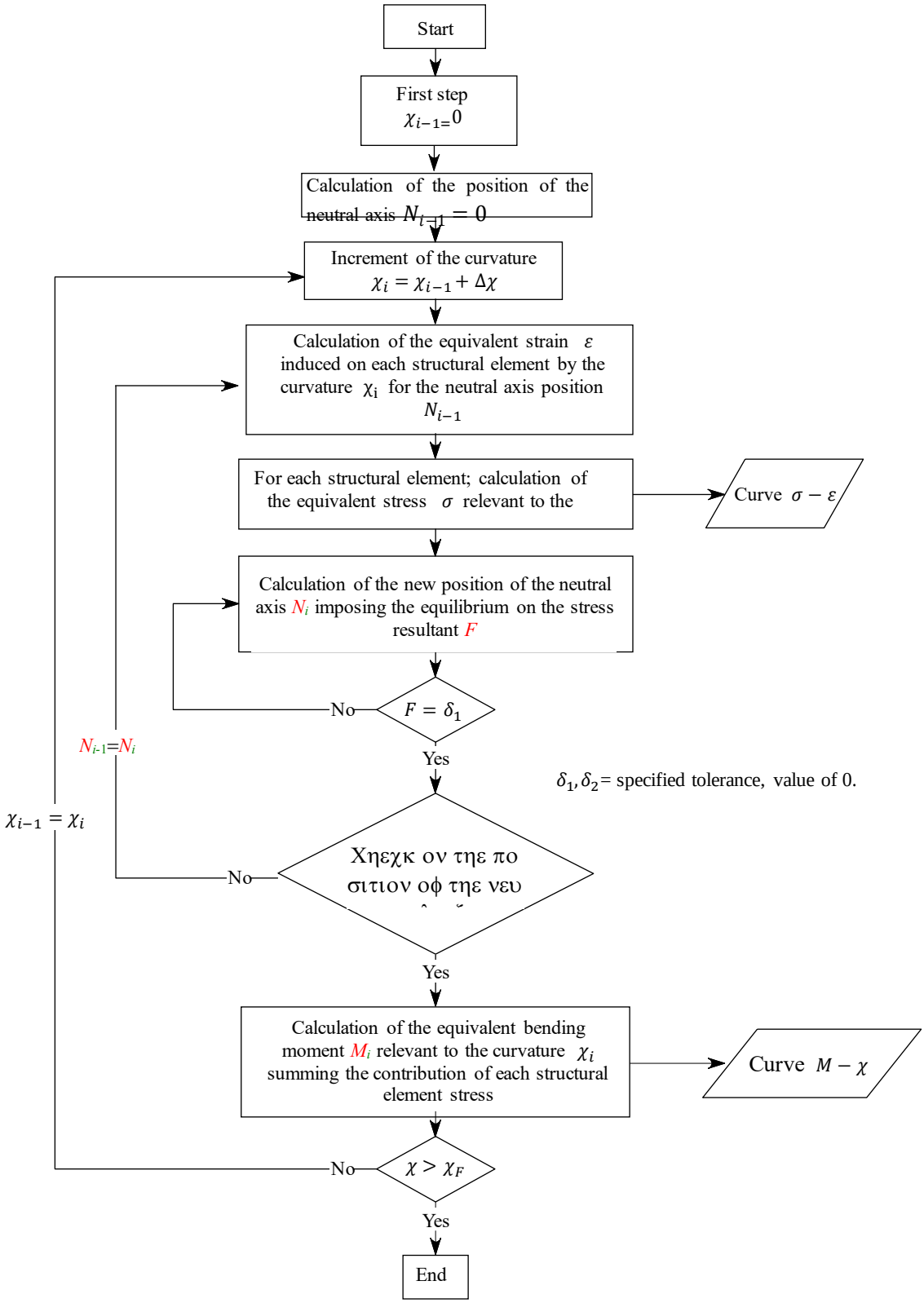

(c) Stiffened plate element:

The plate between stiffener elements, between a stiffener element and a hard corner element, or between hard corner elements is to be treated as a stiffened plate element (*See* **Fig. An2**).

Fig. An2 Extension of the Breadth of the Attached Plating and Hard Corner Element

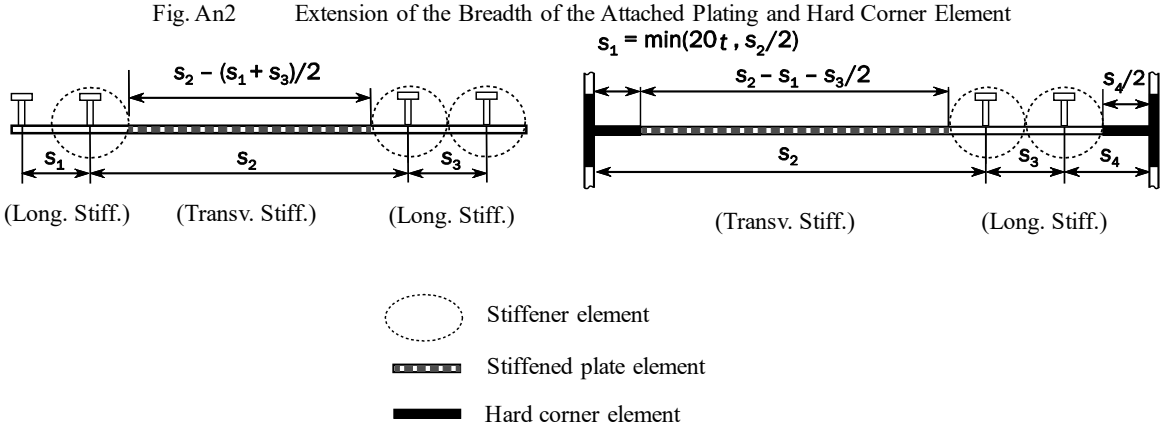

The typical examples of modelling of the hull girder section are illustrated in **Figs. An3** and **An4**. Notwithstanding the foregoing principle, these figures are to be applied to the modelling in the vicinity of the upper deck, sheer strake and hatch side girder.

Fig. An3 Examples of the Configuration of Stiffened Plate Elements, Stiffener Elements and Hard Corner Elements on a Hull Section

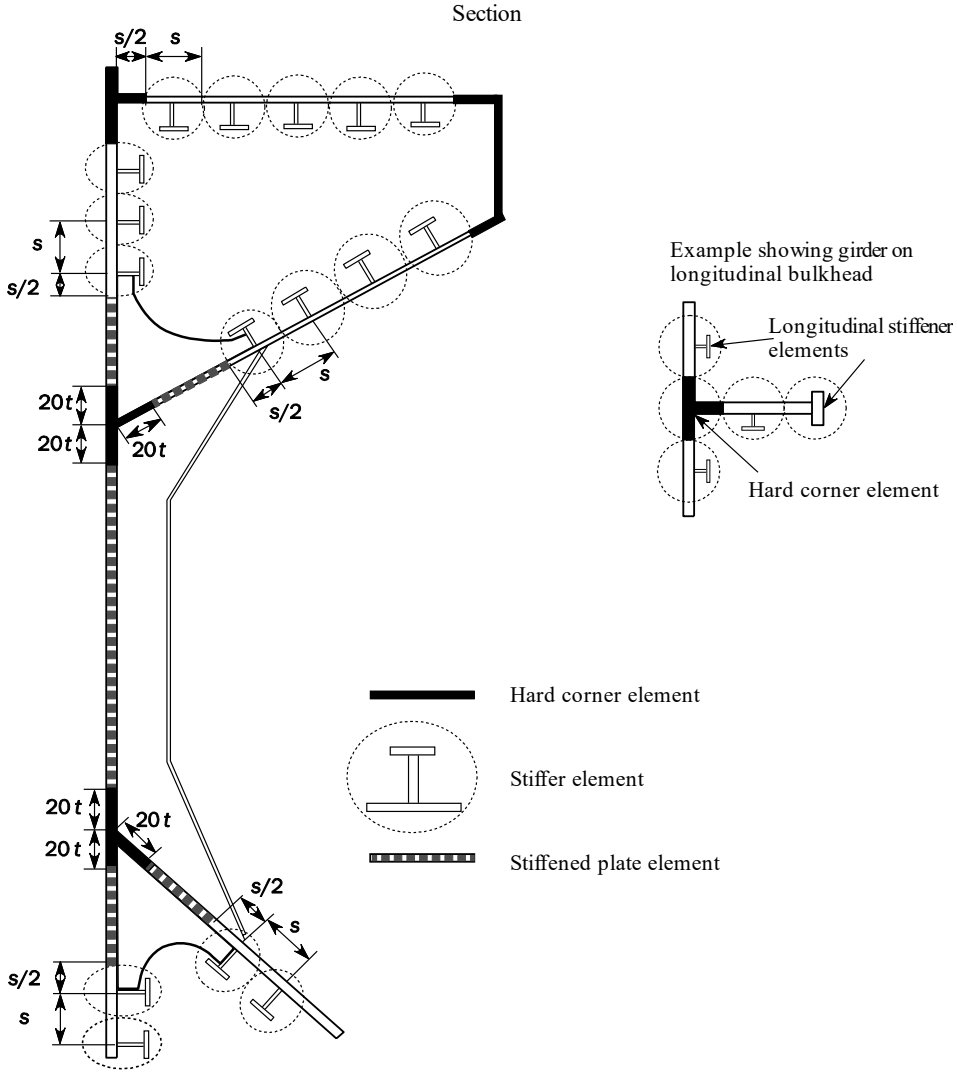

- In the case of the knuckle point, as shown in **Fig. An5**, the plating area adjacent to knuckles in the plating with an angle greater than 30 *degrees* is defined as a hard corner. The extent of one side of the corner is taken equal to $20t_{n50}$ on transversely framed panels and to $0.5s$ on longitudinally framed panels from the knuckle point.
- Where the plating is stiffened by non-continuous longitudinal stiffeners, the non-continuous stiffeners are considered only as dividing plating into various elementary plate panels.
- Where an opening is provided in the stiffened plate element, the opening is to be considered in accordance with **5.2.1.4**.
- Where attached plating is made of steel having different thicknesses and/or yield stresses, an average thickness and/or average yield stress obtained from the following formula is to be used for the calculation.

$$t = \frac{t_1 s_1 + t_2 s_2}{s} \qquad \sigma_{Yp} = \frac{\sigma_{Yp1} t_1 s_1 + \sigma_{Yp2} t_2 s_2}{ts}$$

where:

σ_{Yp1}, σ_{Yp2}, t_1, t_2, s_1, s_2 and s are as shown in **Fig. An6**.

Fig. An4 Extension of the Breadth of the Attached Plating and Hard Corner Elements

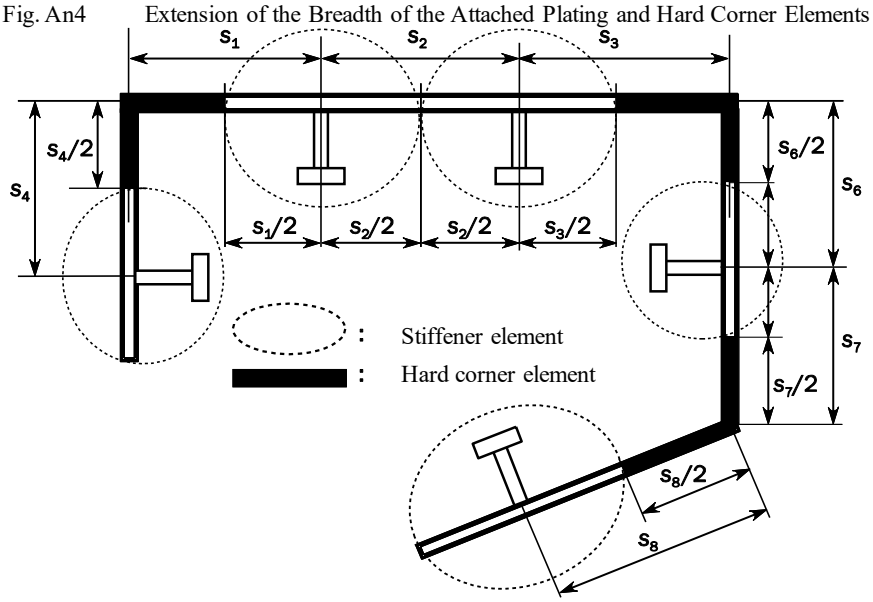

Fig. An5 Plating with Knuckle Point

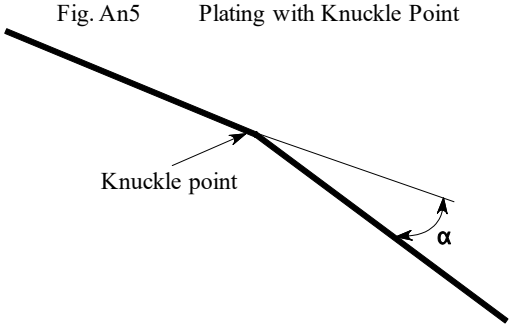

Fig. An6 Element with Different Thicknesses and Yield Strengths

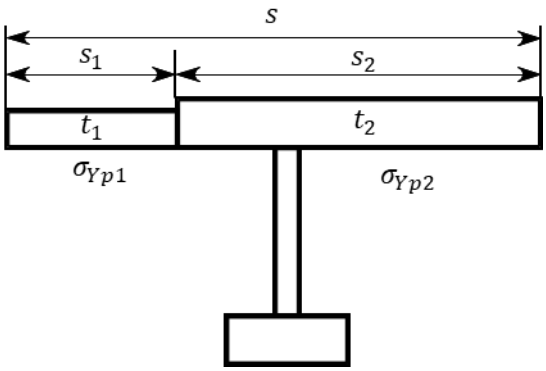

An2.3 Load-end Shortening Curves

An2.3.1 Stiffened Plate Element and Stiffener Element

Stiffened plate elements and stiffener elements composing the hull girder transverse sections may collapse following one of the modes of failure specified in **Table An1**.

- Where the plating is stiffened by non-continuous longitudinal stiffeners, the stress of the element is to be obtained in accordance with **An2.3.3** to **An2.3.8**, taking into account the non-continuous longitudinal stiffener. In calculating the total forces for assessing the hull girder ultimate strength, the area of the non-continuous longitudinal stiffener is to be assumed as 0.
- Where an opening is provided in the stiffened plate element, the area of the stiffened plate element under consideration is to be obtained by deducting the opening area from the plating in calculating the total forces for assessing the hull girder ultimate strength. The consideration of the opening is as specified in **5.2.1.4**.
- For a stiffened plate element, the effective width of the plate for the load shortening portion of the stress-strain curve is to be taken as the full plate width, in other words, to the intersection of another plate or longitudinal stiffener, neither from the end of the hard corner element nor from the attached plating of stiffener element, if any. In calculating the total forces for assessing the hull girder ultimate strength, the area of the stiffened plate element is to be taken between the hard corner element and the stiffener element or between the hard corner elements, as applicable.

Table An1 Modes of Failure of Stiffened Plate Element and Stiffener Element

Element	Mode of failure	Curve σ-ε defined in
Lengthened stiffened plate element or stiffener element	Elasto-plastic collapse	**An2.3.3**
Shortened stiffener element	Beam column buckling Torsional buckling Web local buckling of flanged profiles Web local buckling of flat bars	**An2.3.4** **An2.3.5** **An2.3.6** **An2.3.7**
Shortened stiffened plate element	Plate buckling	**An2.3.8**

An2.3.2 Hard Corner Element

The relevant load-end shortening curve $\sigma - \epsilon$ is to be obtained for lengthened and shortened hard corners as specified in **An2.3.3**.

An2.3.3 Elasto-plastic Collapse of Structural Elements

The equation describing the load-end shortening curve $\sigma - \epsilon$ for the elasto-plastic collapse of structural elements composing the hull girder transverse section is to be obtained from the following formula and is to be valid for both positive (shortening) and negative (lengthening) strains (*See* **Fig. An7**):

$$\sigma = \Phi\ \sigma_{YA}$$

where:

σ_{YA}: Equivalent minimum yield stress (N/mm^2) of the element under consideration obtained by the following formula:

$$\sigma_{YA} = \frac{\sigma_{Yp}A_p + \sigma_{Ys}A_s}{A_p + A_s}$$

Φ: Edge function, equal to the following:

$$\Phi = -1 \text{ for } \epsilon < -1$$

$$\Phi = \epsilon \text{ for } -1 \le \epsilon \le 1$$

$$\Phi = 1 \text{ for } \epsilon > 1$$

ϵ: Relative strain, equal to the following:

$$\epsilon = \frac{\epsilon_E}{\epsilon_Y}$$

ϵ_E: Element strain under consideration.

ϵ_Y: Strain at yield stress in the element, equal to the following:

$$\epsilon_Y = \frac{\sigma_{YA}}{E}$$

Fig. An7 Load-end Curve $\sigma - \epsilon$ for Elasto-plastic Collapse

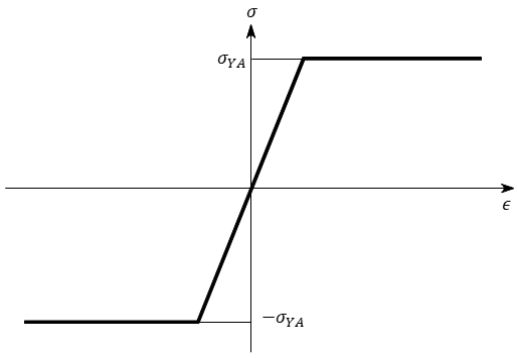

An2.3.4 Beam Column Buckling

The equation describing the load-end shortening curve $\sigma_{CR1} - \epsilon$ for the beam column buckling of stiffeners composing the hull girder transverse section is to be obtained from the following formula (*See* **Fig. An8**):

$$\sigma_{CR1} = \Phi\sigma_{C1}\frac{A_s + A_{pE}}{A_s + A_p}$$

where:

Φ: Edge function as specified in **An2.3.3**.

σ_{C1}: Critical stress (N/mm^2), equal to the following:

$$\sigma_{C1} = \frac{\sigma_{E1}}{\epsilon} \text{ for } \sigma_{E1} \le \frac{\sigma_{YB}}{2}\epsilon$$

$$\sigma_{C1} = \sigma_{YB}\left(1 - \frac{\sigma_{YB}\epsilon}{4\sigma_{E1}}\right) \text{ for } \sigma_{E1} > \frac{\sigma_{YB}}{2}\epsilon$$

σ_{YB}: Equivalent minimum yield stress (N/mm^2) of the element under consideration obtained by the following formula:

$$\sigma_{YB} = \frac{\sigma_{Yp}A_{pE1}l_{pE} + \sigma_{Ys}A_s l_{sE}}{A_{pE1}l_{pE} + A_s l_{sE}}$$

A_{pE1}: Effective area (cm^2), equal to the following:

$$A_{pE1} = b_{E1}t \times 10^{-2}$$

l_{pE}: Distance (mm) measured from the neutral axis of the stiffener with attached plate of width b_{E1} to the bottom of the attached plate.

l_{sE}: Distance (mm) measured from the neutral axis of the stiffener with attached plating of width b_{E1} to the top of the stiffener.

ϵ: Relative strain, as specified in **An2.3.3**.

σ_{E1}: Euler column buckling stress (N/mm^2), equal to the following:

$$\sigma_{E1} = \pi^2 E\frac{I_E}{A_E l^2} \times 10^2$$

I_E: Net moment of inertia of stiffeners (cm^4) with attached plating of width b_{E1}.

A_E: Net sectional area (cm^2) of stiffeners with attached plating of width b_E

b_{E1}: Effective width corrected for relative strain (mm), equal to the following:

$b_{E1} = \frac{s}{\beta_E}$ for $\beta_E > 1$

$b_{E1} = s$ for $\beta_E \leq 1$

$\beta_E = \frac{s}{t}\sqrt{\frac{\epsilon\sigma_{Yp}}{E}}$ for $\beta_E \leq 1$

A_{pE}: Net sectional area (cm^2) of attached plating of width b_E, equal to the following:

$A_{pE} = b_E t_n \times 10^{-2}$

b_E: Effective width (mm) of the attached plating, equal to the following:

$b_E = \left(\frac{2.25}{\beta_E} - \frac{1.25}{\beta_E{}^2}\right)s$ for $\beta_E > 1.25$

$b_E = s$ for $\beta_E \leq 1.25$

Fig. An8 Load-end Shortening Curve $\sigma_{CR1} - \epsilon$ for Beam Column Buckling

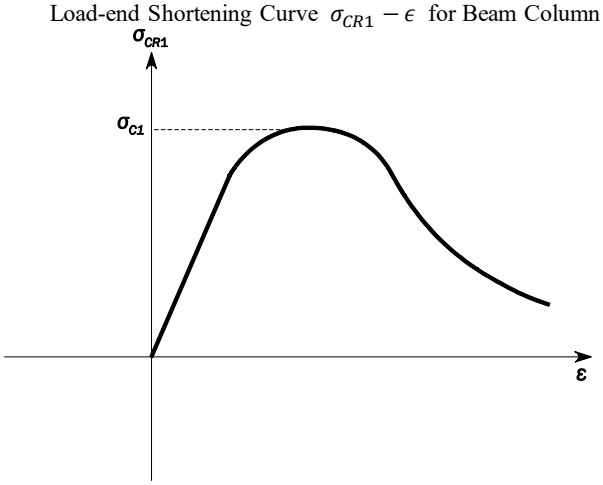

An2.3.5 Torsional Buckling

The equation describing the load-end shortening curve $\sigma_{CR2} - \epsilon$ for the flexural-torsional buckling of stiffeners composing the hull girder transverse section is to be obtained according to the following formula (*See* **Fig. An9**):

$$\sigma_{CR2} = \Phi\frac{A_s\sigma_{C2} + A_p\sigma_{CP}}{A_s + A_p}$$

where:

Φ: Edge function as specified in **An2.3.3**.

σ_{C2}: Critical stress (N/mm^2), equal to the following:

$\sigma_{C2} = \frac{\sigma_{E2}}{\epsilon}$ for $\sigma_{E2} \leq \frac{\sigma_{Ys}}{2}\epsilon$

$\sigma_{C2} = \sigma_{Ys}\left(1 - \frac{\sigma_{Ys}\epsilon}{4\sigma_{E2}}\right)$ for $\sigma_{E2} > \frac{\sigma_{Ys}}{2}\epsilon$

σ_{E2}: Euler torsional buckling stress (N/mm^2), equal to the reference stress for torsional buckling specified in **Annex 5.3 An2.4.4-4 of Part 2-1**.

ϵ: Relative strain, as specified in **An2.3.3**.

σ_{CP}: Buckling stress of the attached plating (N/mm^2), equal to the following:

$\sigma_{CP} = \left(\frac{2.25}{\beta_E} - \frac{1.25}{\beta_E{}^2}\right)\sigma_{Yp}$ for $\beta_E > 1.25$

$\sigma_{CP} = \sigma_{Yp}$ for $\beta_E \leq 1.25$

β_E: Coefficient, as specified in **An2.3.4**.

Fig. An9 Load-end Shortening Curve $\sigma_{CR2} - \epsilon$ for Flexural-torsional Buckling

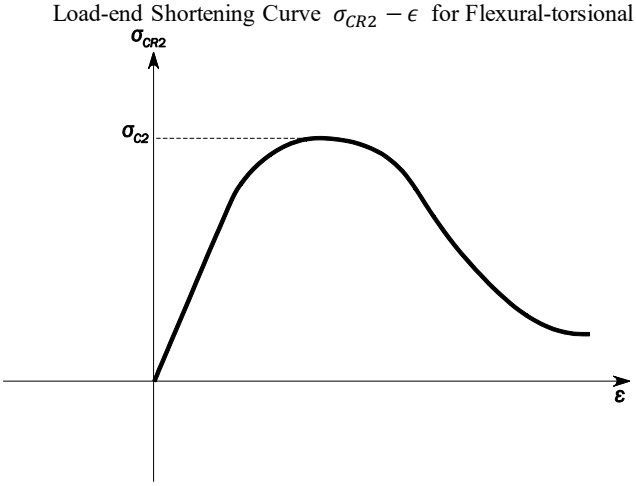

An2.3.6 Web Local Buckling of Stiffeners Made of Flanged Profiles

The equation describing the load-end shortening curve $\sigma_{CR3} - \epsilon$ for the web local buckling of flanged stiffeners composing the hull girder transverse section is to be obtained from the following formula:

$$\sigma_{CR3} = \Phi \frac{b_E t \sigma_{Yp} + (h_{we} t_w + b_f t_f)\sigma_{Ys}}{st + h_w t_w + b_f t_f}$$

where:

Φ: Edge function, as specified in **An2.3.3**.

b_E: Effective width (mm) of the attached shell plating, as specified in **An2.3.4**.

h_{we}: Effective height (mm) of the web, equal to the following:

$$h_{we} = \left(\frac{2.25}{\beta_w} - \frac{1.25}{\beta_w{}^2}\right) h_w \text{ for } \beta_w > 1.25$$

$$h_{we} = h_w \text{ for } \beta_w \leq 1.25$$

$$\beta_w = \frac{h_w}{t_w}\sqrt{\frac{\epsilon \sigma_{Ys}}{E}}$$

ϵ: Relative strain, as specified in **An2.3.3**.

An2.3.7 Web Local Buckling of Stiffeners Made of Flat Bars

The equation describing the load-end shortening curve $\sigma_{CR4} - \epsilon$ for the web local buckling of flat bar stiffeners composing the hull girder transverse section is to be obtained from the following formula (*See* **Fig. An10**):

$$\sigma_{CR4} = \phi \frac{A_p \sigma_{CP} + A_s \sigma_{C4}}{A_p + A_s}$$

where:

ϕ: Edge function, as specified in **An2.3.3**.

σ_{CP}: Buckling stress (N/mm^2) of the attached plating, as specified in **An2.3.5**.

σ_{C4}: Critical stress (N/mm^2), equal to the following:

$$\sigma_{C4} = \frac{\sigma_{E4}}{\epsilon} \text{ for } \sigma_{E4} \leq \frac{\sigma_{Ys}}{2}\epsilon$$

$$\sigma_{C4} = \sigma_{Ys}\left(1 - \frac{\sigma_{Ys}\epsilon}{4\sigma_{E4}}\right) \text{ for } \sigma_{E4} > \frac{\sigma_{Ys}}{2}\epsilon$$

σ_{E4}: Local Euler buckling stress (N/mm^2), equal to the following:

$$\sigma_{E4} = 160000\left(\frac{t_w}{h_w}\right)^2$$

ϵ: Relative strain, as specified in **An2.3.3**.

Fig. An10 Load-end Shortening Curve $\sigma_{CR4} - \epsilon$ for Web Local Buckling

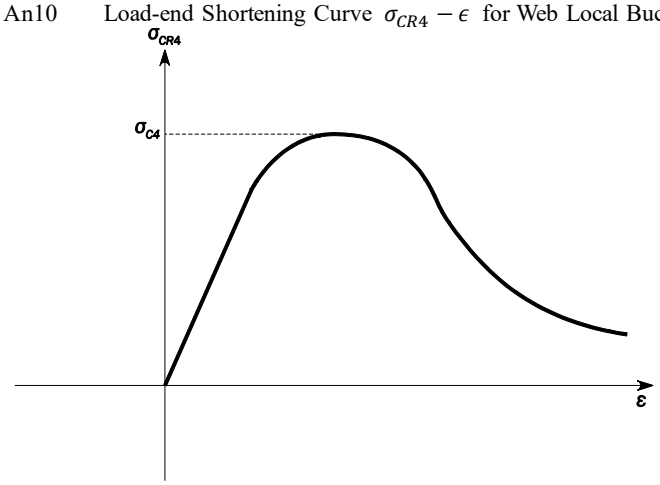

An2.3.8 Plate Buckling

The equation describing the load-end shortening curve $\sigma_{CR5} - \epsilon$ for the buckling of transversely stiffened panels composing the hull girder transverse section is to be obtained from the following formula:

$$\sigma_{CR5} = \min \begin{cases} \sigma_{Yp}\Phi \\ \Phi\sigma_{Yp}\left[\frac{s}{l}\left(\frac{2.25}{\beta_E} - \frac{1.25}{{\beta_E}^2}\right) + \left(1 - \frac{s}{l}\right)\left(\frac{0.06}{\beta_E} + \frac{0.6}{{\beta_E}^2}\right)\right] \end{cases}$$

Φ: Edge function as specified in **An2.3.3**.

$$\beta_E = \frac{s}{t}\sqrt{\frac{\epsilon\sigma_{Yp}}{E}}$$

s: Plate breadth (mm), taken as the spacing between the stiffeners.

l: Length (mm) of the longer side of the plate.

An3. Alternative Methods

An3.1 General

An3.1.1

The vertical bending moment-curvature χ relationship (curve $M - \chi$) may be established by alternative methods. Such models are to consider all the relevant effects important to the non-linear response with due consideration of the following:

(1) Non-linear geometrical behaviour

(2) Inelastic material behaviour

(3) Geometrical imperfections and residual stresses (geometrical out-of-flatness of plate and stiffeners)

(4) Simultaneously acting loads:

- Bi-axial compression
- Bi-axial tension
- Shear and out-of-plane load

(5) Boundary conditions

(6) Interactions between buckling modes

(7) Interactions between structural elements such as plates, stiffeners and girders

(8) Post-buckling load bearing capacity

(9) Overstressed elements on the compression side of the hull girder cross section, possibly leading to local permanent sets/buckle damages in plating, stiffeners, etc. (double bottom effects or similar)

An3.2 Non-linear Finite Element Analysis

An3.2.1

Advanced non-linear finite element analysis models may be used for the assessment of the hull girder ultimate strength. Such models are to consider the relevant effects important to the non-linear responses with due consideration of the items listed in **An3.1.1**.

An3.2.2

Particular attention is to be given to modelling the shape and size of geometrical imperfections. It is to be confirmed that the shape and size of geometrical imperfections trigger the most critical failure modes.

Chapter 6 LOCAL STRENGTH

Symbols

For symbols not specified in this Chapter, refer to **1.4**.

σ_Y: Specified minimum yield stress (N/mm^2)

b: Length (mm) of the shorter side of the plate panel

a: Length (mm) of the longer side of the plate panel

ℓ_{bdg}: Effective bending span (m)

d_{shr}: Effective shear depth (mm)

ℓ_{shr}: Effective shear span (m)

s: Spacing (mm) of stiffeners

ℓ: Full length (m) of stiffener

6.1 General

6.1.1 Overview

6.1.1.1

This Chapter specifies the requirements in **Table 6.1.1-1** as those for local strength assessment.

Table 6.1.1-1 Overview of Chapter 6

Section	Title	Overview
6.1	General	Overview of this Chapter and requirements for its application
6.2	Design Load Scenarios and Loads of the Ship to Be Assessed	Requirements regarding the design load scenarios and loads of the ship to be considered in local strength assessment
6.3	Plates	Requirements for the yield strength (bending strength) assessment of plates
6.4	Stiffeners	Requirements for the yield strength (bending and shear strength) assessment of stiffeners

6.1.1.2

1 This Chapter primarily specifies the requirements for the yield strength assessment of plates and stiffeners subject to lateral loads. For longitudinal hull girder structural members, the axial force due to hull girder bending is also taken into account in addition to lateral loads.

2 The primary design load scenarios to be considered for the ship under strength assessment are the maximum load condition, the testing condition and flooded conditions.

3 The term "lateral loads" in **-1** above means static and dynamic loads due to such factors as seawater or cargoes. However, impact loads due to slamming or sloshing are disregarded in this Chapter but are to be assessed separately in accordance with **Chapter 10**. The assumption here is that lateral loads act as distributed loads on plates and stiffeners. Hence, separate consideration is to be given where cargo loads cannot be treated as distributed loads.

4 In the yield strength assessment in **-1** above, plates are to be assessed for bending strength, while stiffeners are to be assessed for both bending strength and shear strength.

6.1.2 Application

6.1.2.1 Application of the Rules

1 This Chapter is to apply to plates and stiffeners subject to lateral loads. This Chapter applies to the hull structure over the full length of the ship, including the fore peak, cargo region, machinery space and aft peak, engine casing and superstructure. However, where any special requirements for superstructures, deckhouses, hatch covers and hatch coamings are specified in **Chapter 11** and **Chapter 14**, such requirements are to apply.

2 The requirements for impact loads due to slamming are as specified in **Table 6.1.2-1**.

3 The requirements for steel coils and vehicle loading are as specified in **Table 6.1.2-2**.

4 Where cargo loads other than those in **-3** above cannot be treated as distributed loads, such cargo loads are to be assessed by a method deemed appropriate by the Society, taking into account the load distribution of each particular cargo.

Table 6.1.2-1 Requirements for Local Strength Assessment Against Impact Loads

Member	Relevant requirement
Strengthened bottom forward	**10.6**
Bow flare slamming	**10.7**

Table 6.1.2-2 Requirements for Cargoes Not Deemed Distributed Loads

Cargo	Relevant requirement
Steel coils	**10.1, Part 2-5** (General Cargo Ships)
Vehicles (including those used in cargo handling)	**10.1, Part 2-6** (Car Carriers and Ro-ro Cargo Ships)

6.1.3 Net Scantling Approach

6.1.3.1 General

The required scantlings specified in this Chapter are net scantlings, unless otherwise specified.

6.2 Design Load Scenarios and Loads of the Ship to Be Assessed

6.2.1 General

6.2.1.1

1 Unless otherwise specified, a strength assessment is to be carried out for the maximum load condition, the testing condition and flooded conditions.

2 For longitudinal hull girder structural members, hull girder loads due to longitudinal bending are to be considered in addition to lateral loads on plates and stiffeners.

3 Lateral loads are, in principle, assumed to act from one side of plates and stiffeners. However, where any loads are constantly acting from the other side, such loads may be taken into account.

4 Plates constituting boundaries of watertight compartments not intended to carry liquids and stiffeners supporting such plates, excluding shell plating, stiffeners attached to shell plating, weather deck plating and stiffeners attached to weather deck plating, are to be subjected to lateral loads in flooded conditions.

6.2.2 Assessment Design Load Scenarios and Loads for Members to Be Assessed

6.2.2.1

For the plates constituting the boundaries of compartments and the stiffeners supporting such plates listed in **Table 6.2.2-1**, the strength assessment specified in this Chapter is to be carried out considering the lateral loads and hull girder loads specified in the table. For members/compartments corresponding to multiple conditions, the strength assessment is to be carried out for all applicable loads.

Table 6.2.2-1 Assessment Design load scenarios and Loads for Members/Compartments to Be Assessed

Compartments or members to be assessed	Design load scenario	Load				
		Lateral load	Load type	Load component	Refer to the following:	
					Lateral load (P)	Hull girder load (M_{V-HG}, M_{H-HG})
Outer shell (including stiffeners)	Maximum load condition	External pressure	Seawater	Static + dynamic loads	4.4.2.2-1	4.4.2.9
Cargo tanks, ballast tanks, ballast holds and other tanks		Internal pressure	Liquid loaded	Static + dynamic loads	4.4.2.2-2	
Cargo holds(1)			Dry bulk cargoes	Static + dynamic loads		
Cargo holds(2)			Others	Static + dynamic loads		
Weather decks (including stiffeners)		Others	Green sea, unspecified loads	Green sea load, static + dynamic loads	Greater of the pressures specified in 4.4.2.2-3 and -4	
Internal decks(2) (including stiffeners)			Cargoes	Static + dynamic loads	4.4.2.2-3	
Members constituting compartments subject to hydrostatic testing	Testing condition	Internal pressure	Seawater	Static loads	4.4.3.2	4.4.3.3
Compartments not carrying liquids(3)	Flooded condition	Internal pressure	Seawater	-	4.4.4.1	4.4.4.2

(Notes)

(1) For ships of single-side skin construction for carrying cargoes other than liquids, the outer shell (including stiffeners) may be excluded from the assessment.

(2) For ships carrying cargoes other than bulk and liquid cargoes with the cargoes properly fastened or otherwise held in position so that the cargo loads can be deemed as acting only on the inner bottom plating and internal deck, the assessment may be performed only for the inner bottom plating and the internal deck.

(3) Not required to be applied to shell plating, stiffeners attached to shell plating, weather deck plating and stiffeners attached to weather deck plating.

6.2.3 Hull Girder Loads

6.2.3.1 Stress Due to Hull Girder Loads

The stress σ_{BM} (N/mm^2) due to the hull girder load at the plate or stiffener to be assessed is to be taken according to the following formula. However, in case of load condition RP in the maximum load condition, σ_{BM} is not to be less than when $M_{V-HG} = 0$ or $M_{H-HG} = M_{WH}$:

$$\sigma_{BM} = \left[\left|\frac{M_{V-HG}}{I_{y-n50}}(z - z_n)\right| + \left|\frac{M_{H-HG}}{I_{z-n50}}y\right|\right] \times 10^5$$

M_{V-HG}: Hull girder load (vertical bending moment) corresponding to each design load scenario specified in Table 6.2.2-1.

M_{H-HG}: Hull girder load (horizontal bending moment) considered in maximum load condition, as specified in 4.4.2.9-2. $M_{H-HG} = 0$ in load conditions other than maximum load condition.

M_{WH}: Wave-induced horizontal bending moment (kN-m) specified in 4.4.2.9-2.

I_{y-n50}: Moment of inertia (cm^4) of the hull transverse section under consideration about its horizontal neutral axis.

Corrosion additions considered in the calculation are as specified in 3.3.4.

I_{z-n50}: Moment of inertia (cm^4) of the hull transverse section under consideration about its vertical neutral axis. Corrosion additions considered in the calculation are as specified in 3.3.4.

z: Z coordinate (m) at the load calculation point for the member under consideration.

z_n: Vertical distance (m) from the top of the keel in the transverse section under consideration to the horizontal neutral axis.

y: Y coordinate (m) at the load calculation point for the member under consideration.

The coordinate systems and the load calculation points are as specified in 1.4.3.6, 3.7.1 and 3.7.2, respectively.

6.3 Plates

6.3.1 General

6.3.1.1 Application

1 The scantlings of plates subject to lateral loads are to be in accordance with the requirements in 6.3.2.

2 Notwithstanding **-1** above, the scantlings of bulkhead plating and bilge plating are to be in accordance with the requirements in 6.3.3 and 6.3.4, respectively.

6.3.2 Plates

6.3.2.1 Bending Strength

The plate thickness is to be not less than the largest of the values obtained by the following formula under all applicable design load scenarios specified in Table 6.2.2-1. Application of gross or net scantlings in the values obtained from the following is specified in Table 6.3.2-1:

$$t = C_{Safety} C_{Aspect} \sqrt{\frac{4}{1.15 C_a \sigma_Y}} \sqrt{\frac{|P| b^2}{f_P} \times 10^{-3}} (mm)$$

σ_Y: Specified minimum yield stress (N/mm^2)

b: Length (mm) of the shorter side of the plate panel

a: Length (mm) of the longer side of the plate panel

α: Aspect ratio to be taken as a/b.

f_P: Strength coefficient as given in Table 6.3.2-1.

P: Lateral pressure (kN/m^2) corresponding to each Design load scenario specified in Table 6.3.2-1, to be calculated at the load calculation point specified in 3.7.

C_a: Coefficient of axial force effect as specified in Table 6.3.2-2 when $\alpha \geq 2$ or Table 6.3.2-3 when $\alpha < 2$.

C_{Aspect}: Correction coefficient for the aspect ratio of the plate panel as given in Table 6.3.2-1.

C_{Safety}: Safety factor taken as 1.0.

σ_{BM}: Axial stress (N/mm^2) due to hull girder bending as specified in 6.2.3.1.

Table 6.3.2-1 Application of Gross or Net Scantlings and Each Parameter in the Evaluation for Each Design Load Scenario

Design load scenario		Application of gross or net scantlings	Lateral load P (kN/m^2)	Member	C_{Aspect}	f_P
Maximum load condition		Net scantling	P_{ex}, P_{in}, P_{dk} and P_{GW} To be in accordance with **4.4.2.2-1** to **-4** corresponding to compartments/members to be assessed in **Table 6.2.2-1**	Longitudinal hull girder structural members	1.0	12
				Other members	$1.07 - 0.28\left(\frac{b}{a}\right)^2$ but 1.0 for $\alpha > 2$	
Testing condition	Case 1	Gross scantling	P_{ST-in1} To be in accordance with **4.4.3.2**	Longitudinal hull girder structural members	1.0	12
				Other members	$1.07 - 0.28\left(\frac{b}{a}\right)^2$ but 1.0 for $\alpha > 2$	
	Case 2	Net scantling	P_{ST-in2} To be in accordance with **4.4.3.2**	Longitudinal hull girder structural members	1.0	16
				Other members	$\sqrt{\frac{1}{1+\left(\frac{b}{a}\right)^2}}$	
Flooded condition		Net scantling	P_{FD-in} To be in accordance with **4.4.4.1**	Longitudinal hull girder structural members	1.0	16
				Other members	$\sqrt{\frac{1}{1+\left(\frac{b}{a}\right)^2}}$	

Table 6.3.2-2 Definition of C_a (for $\alpha \geq 2$)

Member		C_a
Longitudinal hull girder structural members	Longitudinal framing system	$\sqrt{1-\left(\frac{\sigma_{BM}}{\sigma_Y}\right)^2}$
	Transverse framing system	$1.0 - \frac{\lvert\sigma_{BM}\rvert}{\sigma_Y}$
Other members		1.0

Table 6.3.2-3 Definition of C_a (for $\alpha < 2$)

Member		C_a	ζ	η
Longitudinal hull girder structural members	Longitudinal framing system	$\left[1-\left(\frac{\lvert\sigma_{BM}\rvert}{\sigma_Y}\right)^{\zeta}\right]^{\eta}$	2	$\frac{b}{a}$
	Transverse framing system		$2\frac{b}{a}$	1
Other members		1.0		

6.3.3 Corrugated Bulkheads

6.3.3.1 Thickness of Corrugated Bulkheads

1 The thickness of the flange and web of corrugated bulkheads under all applicable design load scenarios specified in **Table 6.2.2-1** is to be the largest of the values obtained by the following formula. Application of gross or net scantlings in the values obtained from following formula is specified in **Table 6.3.3-1**:

$$t = C_{Safety}\sqrt{\frac{4}{1.15\sigma_Y}}\sqrt{\frac{|P|b^2\gamma}{f_P}\times 10^{-3}}(mm)$$

$\boldsymbol{C_{Safety}}$: Safety factor as specified in **Table 6.3.3-1**.

σ_Y: Specified minimum yield stress (N/mm^2)

P: Lateral pressure (kN/m^2) corresponding to each design load scenario specified in **Table 6.3.3-1**, to be calculated at the load calculation point specified in **3.7**.

b: Width (mm) of the flange (face plate) or web, respectively, to be taken as in **Table 6.3.3-1**.

γ: Coefficient as specified in **Table 6.3.3-1**.

f_P: Strength coefficient given in **Table 6.3.3-1**.

2 Notwithstanding **-1** above, horizontal corrugated bulkheads are to be as deemed appropriate by the Society.

Fig. 6.3.3-1 Measurement Method of b

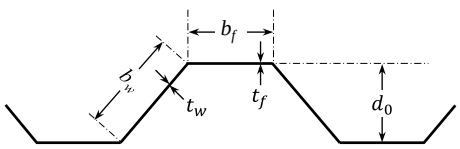

$b = b_f$ or b_w

Table 6.3.3-1 Application of Gross or Net Scantlings and Each Parameter in the Evaluation for Each Design Load Scenario

Design load scenario		Application of gross or net scantlings	Lateral load P (kN/m^2)	γ	Member	C_{Safety}	b	f_P
Maximum load condition		Net scantling	P_{ex}, P_{in}, P_{dk} and P_{GW} To be in accordance with **4.4.2.2-1** to **-4** corresponding to compartments/members to be assessed in **Table 6.2.2-1**	$\frac{\alpha+\beta^3}{\alpha+\beta}$	Flange and Web	1.0	b_f	12
Testing condition	Case1	Gross scantling	P_{ST-in1} To be in accordance with **4.4.3.2**	$\frac{\alpha+\beta^3}{\alpha+\beta}$	Flange and Web	1.0	b_f	12
	Case 2	Net scantling	P_{ST-in2} To be in accordance with **4.4.3.2**	1.0	Flange	1.15	b_f	$8\left[1+\left(\frac{t_w}{t_f}\right)^2\right]$
					Web	1.07	b_w	16
Flooded condition		Net scantling	P_{FD-in} To be in accordance with **4.4.4.1**	1.0	Flange	1.15	b_f	$8\left[1+\left(\frac{t_w}{t_f}\right)^2\right]$
					Web	1.07	b_w	16

Notes:

$\alpha = \frac{{t_w}^3}{{t_f}^3}, \beta = \frac{b_w}{b_f}$

t_f and t_w: Thickness (mm) of the flange and web, respectively

b_f and b_w: Width (mm) of the flange and web, respectively (*See* **Fig. 6.3.3-1**)

6.3.4 Bilge Plating

6.3.4.1 Thickness of Bilge Plating

1 The thickness of bilge plating is to be not less than the value obtained from the following formula. However, this thickness is not to be less than the offered net thickness of the adjacent bottom shell or side shell plating. The definition of bilge plating is as specified in **1.4.4.1**.

$$t = \left[0.335 P_{ex}\left(R + \frac{\Delta s_1 + \Delta s_2}{2 \times 10^3}\right)^{\frac{3}{2}} \ell\right]^{\frac{2}{5}} \ (mm)$$

P_{ex}: Lateral pressure (kN/m^2) due to the external pressure under the maximum load condition specified in **4.4.2.2-1**, to be calculated at the lower end of the bilge part.

R: Radius (m) of bilge circle (*See* **Fig. 6.3.4-1**)

Δs_1 and Δs_2: Distance (mm) from the lower and upper turns of the bilge to the longitudinal frames nearest to the turns, taking the distance outward from the bilge part as positive. However, where $(\Delta s_1 + \Delta s_2)$ is negative, $(\Delta s_1 + \Delta s_2)$ is to be taken as zero (*See* **Fig. 6.3.4-1**).

ℓ: Spacing (m) of floors or brackets.

Fig. 6.3.4-1 Measurement Method of Δs_1, Δs_2, s_1 and s_2

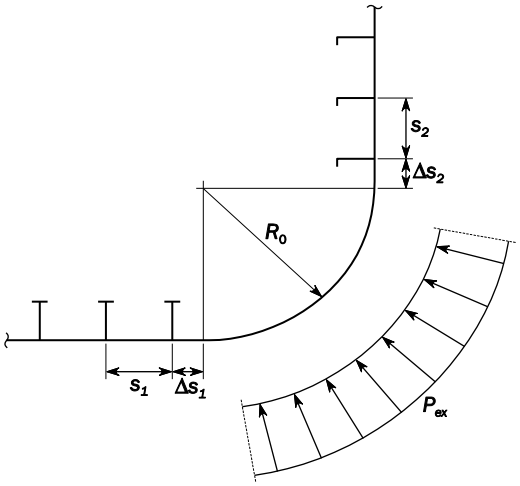

2 In determining the thickness of bilge plating according to the formula in **-1** above, the following condition is to be met:

$$\frac{1000R}{t} \geq 2\left(\frac{\ell}{R}\right)^2$$

R: Radius (m) of bilge circle

ℓ: Spacing(m) of floors or brackets

t: Thickness (mm) of bilge plating

3 Where a plate seam is located in the straight plate immediately below the lowest stiffener on the side shell, any increased thickness required for the bilge plating need not to be extended to the adjacent side shell plating, provided the plate seam is not more than $s_2/4$ below the lowest side longitudinal. Similarly, for the flat part of adjacent bottom shell plating, any increased thickness required for the bilge plating need not to be extended to the adjacent bottom shell plating, provided that the plate seam is not more than $s_1/4$ beyond the outboard bottom longitudinal (*See* **Fig. 6.3.4-1** for the definitions of s_1 and s_2).

4 Where longitudinals are provided at the bilge part at approximately the same spacing as that of bottom longitudinals, notwithstanding the requirements in **-1**, the requirements in **6.3.2.1** may be applied.

5 Where the bilge plating is of the transverse framing system, longitudinals are to be provided as near to the turns of the bilge as practicable and are to be suitably constructed to maintain the continuity of strength. Where longitudinals are omitted in the bilge part in the amidships part, the distance from the end of the bilge curvature to the nearest longitudinal outside the curved part is not to exceed $1/2$ of the spacing of the longitudinals. The scantlings of those longitudinals are to be not less than those of the closer adjacent longitudinal.

6.4 Stiffeners

6.4.1 General

6.4.1.1 Application

1 Stiffeners subject to lateral loads are to be in accordance with the requirements in **6.4.2**.

2 Notwithstanding **-1** above, the side frames within the cargo region are to be in accordance with **6.4.3**.

6.4.1.2 Grouping of Stiffeners

The scantlings of stiffeners may be decided based on the concept of grouping stiffeners of equal scantlings sequentially arranged between primary supporting members. The scantling of the group of stiffeners is to be taken as the greater of the values obtained from the following **(1)** and **(2)**:

(1) The average of the required scantlings of all stiffeners within a group

(2) 90% of the maximum scantling required for any one stiffener within the group

6.4.1.3 Additional Stresses on Stiffeners Due to Causes such as Displacement of Girders*

Additional stresses on stiffeners due to causes such as displacement of girders are to be appropriately taken into account.

6.4.2 Stiffeners

6.4.2.1 Bending Strength

For all applicable design load scenarios specified in **Table 6.2.2-1**, the section modulus of stiffeners is to be not less than the value obtained from the following formulae. Application of gross or net scantlings in the values obtained from following formula is specified in **Table 6.4.2-5**:

Table 6.4.2-1 Required Section Modulus for Stiffeners Subject to Lateral Pressure

Design load scenario	Required value
Maximum load condition Testing condition	$Z = \frac{C_{Safety} C_{VB} f_{bdg} \lvert P \rvert s \ell_{bdg}{}^2}{12 f_f C_s \sigma_Y}$ (cm^3)
Flooded conditions	$Z = \frac{C_{Safety} f_{bdg-P} \lvert P \rvert s \ell_{bdg}{}^2}{16 f C_s \sigma_Y}$ (cm^3)

ℓ_{bdg}: Effective bending span (m) as specified in **3.6.1.2**.

s: Spacing (mm) of stiffeners

f_{bdg}: Elastic bending moment distribution factor according to the type of end connection of stiffeners as specified in **Table 6.4.2-2**.

f_{bdg-P}: Plastic bending moment distribution factor according to the type of end connection of stiffeners as specified in **Table 6.4.2-3**.

C_{VB}: Coefficient taken as follows:

1.0: For stiffeners arranged horizontally

1.2: For stiffeners not arranged horizontally

P: Lateral pressure (kN/m^2) corresponding to each Design load scenario specified in **Table 6.4.2-5**, to be calculated at the load calculation point specified in **3.7**.

C_s: Coefficient for axial force effect as specified in **Table 6.4.2-4**.

f_f: Coefficient taken as 1.25 for flat bars or 1.0 for other members.

f: Shape coefficient taken as 1.5 for flat bars or 1.2 for other members.

C_{Safety}: Safety factor taken as 1.0.

Table 6.4.2-2 Definition of f_{bdg}

One end	Other end		
	Fixed	Flexibly fixed	Sniped end
Fixed	1.00	1.30	1.50
Flexibly fixed	1.30	0.90	1.20
Sniped end	1.50	1.20	1.50

(Notes)

(1) A fixed end connection is a structure in which a stiffener is continuous or its ends are reinforced with proper backing.

(2) A clipped end connection may be deemed as fixed. However, stiffeners with no effective bracket provided at end are to be assessed based on the section modulus of the end connection. The clipped end connection meant here refers to a stiffener end connection with the face plate clipped off and the web directly connected to the adjacent structure.

(3) A flexibly fixed end connection is a structure fixed to an orthogonal stiffener and not reinforced on the back with an effective supporting member, as shown in **Fig. 6.4.2-1**.

Fig. 6.4.2-1 Examples of Connections

(a) Fixed (b) Flexibly fixed

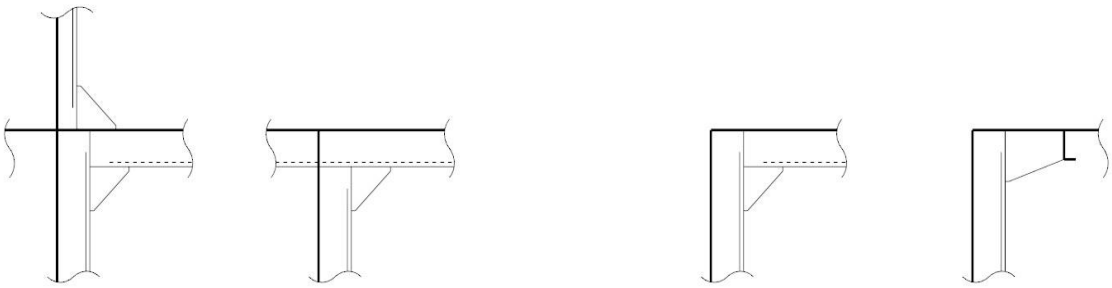

At least one stiffener is continuous

Non-continuous stiffeners

Stiffener with bracketed end connection

Table 6.4.2-3 Definition of f_{bdg-P}

Other end	One end		
	Fixed	Flexibly fixed	Sniped end
Fixed	1.00	1.15	1.35
Flexibly fixed	1.15	1.35	1.60
Sniped end	1.35	1.60	2.00

(Notes)

(1) A fixed end connection is a structure in which a stiffener is continuous or its ends are reinforced with proper backing.

(2) A clipped end connection may be deemed as fixed. However, stiffeners with no effective bracket provided at end are to be assessed based on the section modulus of the end connection. The clipped end connection meant here refers to a stiffener end connection with the face plate clipped off and the web directly connected to the adjacent structure.

(3) A flexibly fixed end connection is a structure fixed to an orthogonal stiffener and not reinforced on the back with an effective supporting member, as shown in **Fig. 6.4.2-1**.

Table 6.4.2-4 Definition of C_s

	C_s
Longitudinal hull girder structural members	$1.0 - \frac{\lvert\sigma_{BM}\rvert}{\sigma_Y}$
Other members	1.0

Table 6.4.2-5 Application of Gross or Net Scantlings and P in the Evaluation for Each Design Load Scenario

Design load scenario		Application of gross or net scantlings	Lateral load P (kN/m^2)
Maximum load condition		Net scantling	P_{ex}, P_{in}, P_{dk} and P_{GW} To be in accordance with **4.4.2.2-1** to **-4** corresponding to compartments/members to be assessed in **Table 6.2.2-1**
Testing condition	Case 1	Gross scantling	P_{ST-in1} To be in accordance with **4.4.3.2**
	Case 2	Net scantling	P_{ST-in2} To be in accordance with **4.4.3.2**
Flooded condition		Net scantling	P_{FD-in} To be in accordance with **4.4.4.1**

6.4.2.2 Shear Strength of Webs

For all applicable design load scenarios specified in **Table 6.2.2-1**, the stiffener web thickness is to be not less than the value obtained from the following formula. Application of gross or net scantlings in the values obtained from following formula is specified in **Table 6.4.2-5**:

$$t_w = \frac{C_{Safety} C_{VS} f_{shr} |P| s \ell_{shr}}{2 d_{shr} \tau_{eH}} \ (mm)$$

τ_{eH}: Permissible shear stress (N/mm^2) taken as follows:

$\sigma_Y / \sqrt{3}$

d_{shr}: Effective shear depth (mm) as specified in **3.6.4.2**.

ℓ_{shr}: Effective shear span (m) as specified in **3.6.1.3**.

s: Spacing (mm) of stiffeners

C_{VS}: Coefficient taken as follows:

1.0: For stiffeners arranged horizontally

1.4: For stiffeners not arranged horizontally

f_{shr}: Shear force distribution factor according to the type of end connection of stiffeners as specified in **Table 6.4.2-6**.

C_{Safety}: Safety factor taken as 1.2.

Table 6.4.2-6 Definition of f_{shr}

One end	Other end		
	Fixed	Flexibly fixed	Sniped end
Fixed	1.00	1.15	1.25
Flexibly fixed	1.15	1.00	1.20
Sniped end	1.25	1.20	1.00

(Notes)

(1) A fixed end connection is a structure in which a stiffener is continuous or its ends are reinforced with proper backing.

(2) A flexibly fixed end connection is a structure fixed to an orthogonal stiffener and not reinforced on the back with an effective supporting member, as shown in **Fig. 6.4.2-1**.

6.4.2.3 Reinforcement of Stiffeners with Struts

1 In ships that fall under either of the following **(1)** or **(2)**, the double bottom is not to be provided with struts.

(1) Ships with a length exceeding 150 *m*

(2) Ships carrying particularly heavy cargoes (except steel coils) (Struts in ships carrying steel coils are to be assessed according to **10.1.2.3, Part 2-5**.)

2 Where stiffeners are supported by struts provided in between the floors in a double bottom, the section modulus and web thickness of bottom longitudinals and inner bottom longitudinals are to be not less than the values calculated in **6.4.2.1** and **6.4.2.2** times those shown in **Table 6.4.2-7**. However, in a cargo loaded condition where $|P_{in}| > 2|P_{ex}|$ or $|P_{ex}| > 2|P_{in}|$, these values are to be obtained from the formula shown in **Table 6.4.2-8** instead of **Table 6.4.2-7**.

P_{in}: Lateral pressure (kN/m^2) acting on the inner bottom plating of a hold loaded with cargo, to be calculated as specified in any of **4.4.2.4** through **4.4.2.7** as applicable depending on the load loaded in the cargo hold. For each load condition specified in **4.4.2.1**, P_{in} is to be calculated at the inner bottom plating in a location provided with struts.

P_{ex}: External pressure (kN/m^2) acting on the bottom shell, to be calculated as specified in **4.4.2.3**. P_{ex} is to be calculated at the bottom shell in a location provided with struts for each load condition specified in **4.4.2.1**.

3 The buckling strength of struts specified in **-2** above is to be in accordance with **7.4.2**. However, the load F (kN) to be used is to be taken according to the following formula:

$$F = \frac{\lambda P_i + P_b}{\lambda + 1} sb \times 10^{-6}$$

λ: Ratio of the moment of inertia of inner bottom longitudinals and bottom longitudinals according to the following formula:

$$\lambda = \frac{I_B}{I_I}$$

I_B: Actual moment of inertia (cm^4) of bottom longitudinals, including attached plating

I_I: Actual moment of inertia (cm^4) of inner bottom longitudinals, including attached plating

P_b: Lateral pressure (kN/m^2) acting on the bottom shell due to the external pressure under the maximum load condition specified in **4.4.2**, to be calculated at the bottom shell in a location provided with struts.

P_i: Lateral pressure (kN/m^2) acting on the inner bottom plating due to the cargo under the maximum load condition specified in **4.4.2**, to be calculated at the inner bottom plating in a location provided with struts.

s: Spacing (mm) of stiffeners

b: Breadth (mm) of the area supported by struts

Table 6.4.2-7 Correction Factor C_1 for Struts

Ratio of the moment of inertia of stiffeners $\max(I_B, I_I)/\min(I_B, I_I)$			≥ 1.0 < 1.2	≥ 1.2 < 1.4	≥ 1.4 < 1.6	≥ 1.6 < 1.8	≥ 1.8
C_1	Bottom longitudinals	Value for section modulus (**6.4.2.1**)	0.625	0.670	0.700	0.725	0.745
		Value for web thickness (**6.4.2.2**)	0.750	0.775	0.800	0.815	0.825
	Inner bottom longitudinals	Value for section modulus (**6.4.2.1**)	0.625	0.670	0.690	0.720	0.740
		Value for web thickness (**6.4.2.2**)	0.750	0.780	0.795	0.810	0.825

Table 6.4.2-8 Correction Factor C_2 for Struts in Ships Where $|P_{in}| > 2|P_{ex}|$ or $|P_{ex}| > 2|P_{in}|$

C_2	$\|P_{in}\| > 2\|P_{ex}\|$	$\|P_{ex}\| > 2\|P_{in}\|$
	Bottom longitudinals	Inner bottom longitudinals
Value for section modulus (6.4.2.1)	$\frac{3}{4}\frac{\lambda}{\lambda+1}\frac{P_{in}}{P_{ex}} - C_1 + \frac{1}{2}$	$\frac{3}{4}\frac{1}{\lambda+1}\frac{P_{ex}}{P_{in}} - C_1 + \frac{1}{2}$
Value for web thickness (6.4.2.2)	$\frac{1}{2}\frac{\lambda}{\lambda+1}\frac{P_{in}}{P_{ex}} - C_1 + 1$	$\frac{1}{2}\frac{1}{\lambda+1}\frac{P_{ex}}{P_{in}} - C_1 + 1$
(Notes) C_1: Coefficient given in Table 6.4.2-7.		
(1) Correction Factor C_2 is not to be less than Correction Factor C_1.		

6.4.3 Side Frames

6.4.3.1 General

1 Side frames are frames that fall under the following **(1)** and **(2)**:

(1) Frames supporting the side shell plating installed between the decks or side stringers in ships with multiple decks

(2) Frames supporting the side shell plating in single deck ships

Fig. 6.4.3-1 Side Frames

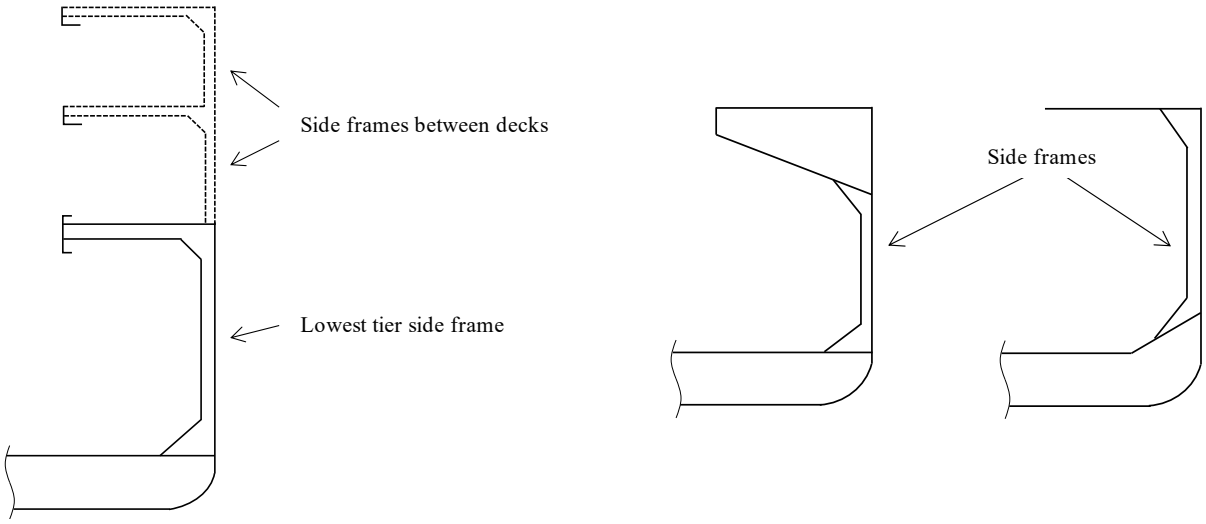

(a) Ship with multiple decks (b) Single deck ship

2 The scantlings of side frames in ships with multiple decks are to be in accordance with the following **(1)** to **(4)**:

(1) The scantlings of side frames between decks, except the lowest tier side frames, are to be in accordance with 6.4.2, and are also to be determined in relation to such factors as the strength of the lowest tier side frames and the arrangement and transverse stiffness of bulkheads.

(2) The scantlings of the lowest tier side frames are to be in accordance with 6.4.3.2.

(3) The scantlings of side frames supporting deck transverses (except cantilever beams) for the longitudinal framing system are to be in accordance with 6.4.3.3.

(4) The requirements in 7.2.8.3 are to apply to side frames supporting cantilever beams.

3 The scantlings of side frames in single deck ships are to be in accordance with the following **(1)** and **(2)**:

(1) The scantlings are to comply with the requirements in 6.4.3.2 and 6.4.3.4.

(2) In addition to **(1)** above, the requirements in 6.4.3.3 and 7.2.8.3 are to apply to deck transverses (except cantilever beams) for the longitudinal framing system and side frames supporting cantilever beams, respectively.

6.4.3.2 Side Frames in Single Deck Ships and Lowest Tier Side Frames in Ships with Multiple Decks

The scantlings of the side frames in single deck ships and the lowest tier side frames in ships with multiple decks are to be in accordance with the following **(1)** and **(2)**:

(1) Bending strength

The section modulus is to be not less than the value obtained from the following formula:

$$Z = C_{Safety}\frac{M_1 + M_2}{\sigma_Y} \times 10^3 (cm^3)$$

C_{safety}: Safety factor taken as 1.0.

M_1: Bending moment (kN-m) due to side loads according to the following formula:

$$M_1 = f_{load} f_{bc} f_t \left(\frac{P_{exsl} + f_p P_{exwl}}{20} + \frac{P_{exsu} + f_p P_{exwu}}{30}\right) s\ell_{1bdg}{}^2 \times 10^{-3}$$

f_{load}, f_{bc}: Coefficient corresponding to loading conditions and boundary conditions at ends of side frames as specified in **Table 6.4.3-1** and **Table 6.4.3-2**. If multiple loading conditions are applicable in loading conditions specified in **Table 6.4.3-1** and **Table 6.4.3-2**, evaluations are to be carried out with all applicable loading condition.

f_t: Coefficient considering effects of brackets provided between side frames and bilge hopper tanks/top side tanks. If both ends are supported by bilge hopper tanks and top side tanks, 0.8. If either end is supported, 0.9. Otherwise, 1.0.

ℓ: Full length (m) of the side frame as specified in **Fig. 6.4.3-2**.

f_p: Coefficient, to be taken 0.9.

ℓ_{1bdg}: Effective bending span (m) of the side frame. Where a bracket is provided, the end of the effective bending span is to be taken to the position where the depth of the side frame and the bracket is equal to $2h_w$ (*See* **Fig. 6.4.3-2**).

s: Spacing (mm) of side frames

P_{exsl}: Hydro static pressure P_{exs} specified in **4.4.2.2-1**, to be calculated at the lower end of full length ℓ of the side frame

P_{exsu}: Hydro static pressure P_{exs} specified in **4.4.2.2-1**, to be calculated at the upper end of full length ℓ of the side frame

P_{exsl}: Dynamic pressure P_{exs} specified in **4.4.2.2-1**, to be calculated at the lower end of full length ℓ of the side frames

P_{exsu}: Dynamic pressure P_{exs} specified in **4.4.2.2-1**, to be calculated at the upper end of full length ℓ of the side frames

M_2: Rotation moment (kN-m) at the lower end of the side frame due to double bottom bending as specified in the following **(a)** or **(b)**. However, where side frames are divided into spans, this value is to be taken as 0 for those other than the one in the lowest span.

(a) $M_2 = 0$ with web frames or structures similar to web frames at the side.

(b) $M_2 = \frac{1}{480\ell}(2 + 3\lambda_1)K(\lambda_1)\alpha_\theta(1 - \nu^2)(f_{db}\rho g T_{SC})(s \times 10^{-3})B_{DB}{}^3$ with no structures in **(a)** above.

Where:

ν: Poisson's ratio, to be taken as 0.3

f_{db}: Coefficient regarding double bottom bending corresponding to loading conditions, as specified in **Table 6.4.3-1**

B_{DB}: Double bottom breadth (m) as specified in **7.3.1.6-2**.

α_θ: Side rotation angle factor due to double bottom bending according to the following formula:

$$\alpha_\theta = 0.85 f_1 f_2$$

f_1: Coefficient regarding effect of the boundary conditions at fore and aft of the cargo hold, as specified in **Table 6.4.3-3**

f_2: Coefficient regarding effect of the boundary conditions at left and right of the cargo hold according to the following formula:

$f_2 = 1.0$ with no bilge hopper provided.

$f_2 = \frac{k}{k + C_{BH}}$ with a bilge hopper provided.

k: Coefficient of stiffness of the bilge hopper as specified in **7.3.3.1**.

C_{BH}: Coefficient of torsional stiffness effect of the bilge hopper as specified in **Table 7.3.3-1**.

$K(\lambda_1)$: Degree of elastic deformation according to the following formula:

$K(\lambda_1) = 0.86 - 0.94\lambda_1$

However, to be taken as 0.4 when less than 0.4.

$\lambda_1 = {}^{\ell_a}/_{\ell}$

ℓ_a: Vertical distance (m) from the half-height position of the double bottom height to the lower end of the frame as specified in **Fig. 6.4.3-2.**

ℓ: Full length of the side frame as specified in **Fig. 6.4.3-2**. However, where side frames are supported by side stringers, ℓ is the distance (m) from the top of the inner bottom plating at the side (upper end of hopper tanks, if hopper tanks are provided) to the side stringer.

(2) Shear strength of webs

The web thickness is to be not less than the value obtained from the following formula:

$$t_w = C_{Safety}\frac{F_1 + F_2}{d_{shr}\tau_Y} \times 10^3 (mm)$$

C_{safety}: Safety factor taken as 1.2.

τ_Y: Permissible shear stress (N/mm^2) taken as follows:

$\sigma_Y/\sqrt{3}$

d_{shr}: Effective shear depth (mm) as specified in **3.6.4.2.**

F_1: Shear force due to side loads (kN) according to the following formula:

$$F_1 = f_{load} f_t \frac{7(P_{exsl} + f_p P_{exwl}) + 3(P_{exsu} + f_P P_{exwu})}{20} s\ell_{1shr} \times 10^{-3}$$

ℓ_{1shr}: Effective shear span (m) of the side frame. Where the side frame is provided with a bracket, the end of the effective shear span is to be taken as the inner end of the bracket.

f_{load}, f_t, P_{exsl}, P_{exwl}, P_{exsu}, P_{exwu}, f_p, s: As specified in **(1)** above.

F_2: Shear force (kN) at the lower end of the frame due to double bottom bending as specified in the following **(a)** or **(b)**. However, where side frames are divided into spans, this value is to be taken as 0 for those other than the one in the lowest span.

(a) $F_2 = 0$ with web frames or structures similar to web frames at the side.

(b) $F_2 = \frac{1}{160\ell^2}(1+\lambda_1)K(\lambda_1)\alpha_\theta(1-\nu^2)(f_{db}\rho g T_{SC})(s \times 10^{-3}){B_{DB}}^3$ with no structures in **(a)** above.

Where:

ℓ, λ_1, $K(\lambda_1)$, α_θ, υ, f_{db}, B_{DB}: As specified in **(1)** above.

Table 6.4.3-1 Coefficient corresponding to loading conditions

	f_{load}	f_{db}
Full loading	1.0	0
Multiport loading	0.8	0.7
Alternate loading	1.0	1.0

Table 6.4.3-2. Coefficient f_{bc} corresponding to boundary conditions at ends of side frames

f_{bc}	Supported by top side tank and bilge hopper tank	Both ends or either end supported by side stringer	Otherwise
Full loading	0.8	0.85	0.8
Multiport loading, Alternate loading	1.0	1.0	1.0

Table 6.4.3-3 Coefficient f_1 corresponding to boundary conditions at fore and aft of cargo holds

	α_{EQ}								
	≤0.5	0.7	0.9	1.0	1.2	1.6	2.0	2.5	4.0≤
f_1	0.058	0.144	0.258	0.319	0.437	0.635	0.770	0.872	1.000

(Notes)

α_{EQ}: Equivalent aspect ratio of double bottom as specified in **Symbols, Chapter 7**

For intermediate values of α_{EQ}, the coefficient is to be determined by interpolation.

Fig. 6.4.3-2 Side Frames

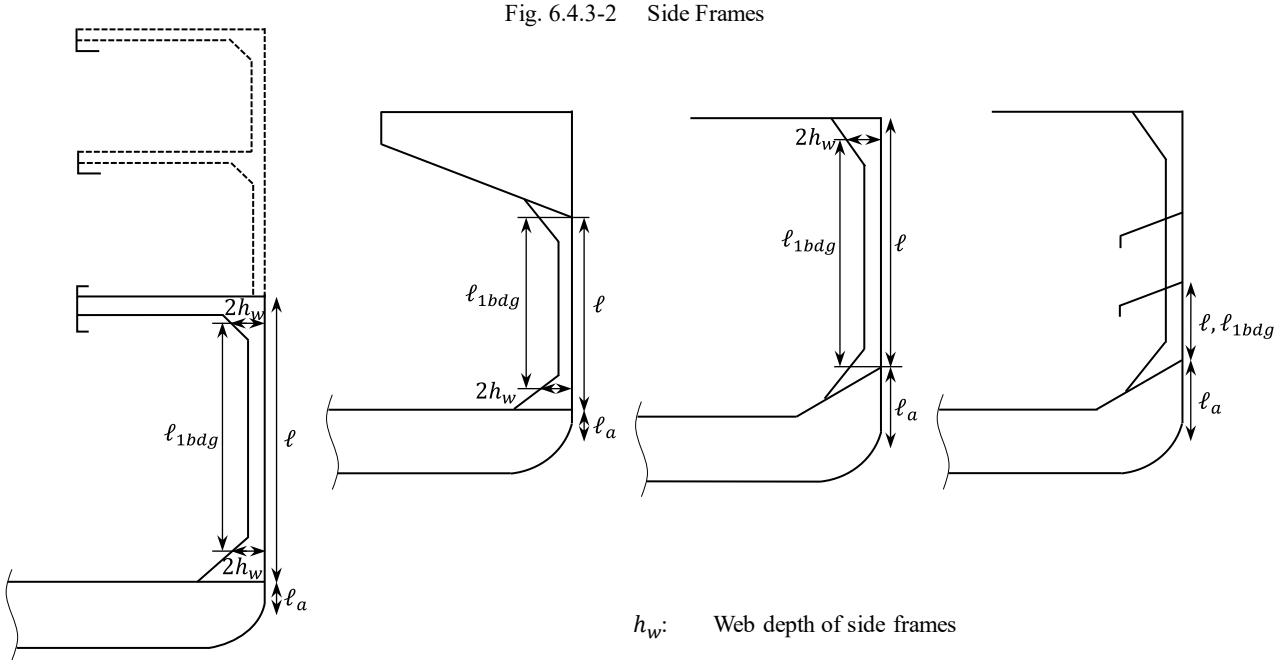

h_w: Web depth of side frames

(a) Ship with multiple

(b) Single deck ship

6.4.3.3 Side Frames Supporting Deck Transverses

The scantlings of side frames supporting deck transverses for the longitudinal framing system are to be in accordance with the following **(1)** and **(2)** in addition to the requirements in **6.4.2** or **6.4.3.2**:

(1) Bending strength

The section modulus is to be not less than the value obtained from the following formula:

$$Z = C_{Safety}\frac{M_B}{\sigma_Y} \times 10^3 (cm^3)$$

C_{safety}: Safety factor taken as 1.0.

M_B: Bending moment (kN-m) at the upper end of the frame according to the following formula:

$$M_B = \frac{k_t \ell_{1bdg}{}^2 s_1 (P_{lower} + 1.5P_{upper}) + 5P_{Deck} s_2 \ell_2{}^2}{30k_t + 40} \times 10^{-3}$$

However, $k_t = 0.4s_2/s_1$

ℓ_{1bdg}: Effective bending span (m) of the side frame. Where a bracket is provided, the end of the effective bending span is to be taken to the position where the depth of the side frame and the bracket is equal to $2h_w$, where h_w is the web depth of side frame.

s_1: Spacing (mm) of side frames

ℓ_2: Full length (m) of the deck transverse

s_2: Spacing (mm) of deck transverses

P_{upper}: Lateral pressure (kN/m^2) due to the external pressure under the maximum load condition specified in **4.4.2**, to be calculated at the upper end of the full length ℓ_1 of the side frame.

P_{lower}: Lateral pressure (kN/m^2) due to the external pressure under the maximum load condition specified in **4.4.2**, to be calculated at the lower end of the full length ℓ_1 of the side frame.

P_{deck}: Average value of the lateral pressure (kN/m^2) on the deck, to be taken as the greater of the cargo load or green sea load under the maximum load condition specified in 4.4.2.2. This load is to be calculated at the midpoint of the full span of the deck transverse.

(2) Shear strength

The web thickness is to be not less than the value obtained from the following formula:

$$t_w = C_{safety}\frac{F_B}{d_{shr}\tau_Y} \times 10^3 (mm)$$

C_{safety}: Safety factor taken as 1.2.

F_B: Shear force (kN) at the upper end of the frame according to the following formula:

$$F_B = \frac{1}{\ell_{1shr}}\left(\frac{4P_{lower} + 11P_{upper}}{40 \times 10^3} s_1 \ell_{1shr}{}^2 + \frac{3}{2} M_B\right)$$

ℓ_{1shr}: Effective shear span (m) of the side frame. Where a bracket is provided, the end of the effective bending span is to be taken as the inner end of the bracket.

ℓ_1: As specified in **(1)** above.

s_1: As specified in **(1)** above.

P_{lower}: As specified in **(1)** above.

P_{upper}: As specified in **(1)** above.

M_B: As specified in **(1)** above.

6.4.3.4 Side Frames Abaft of Collision Bulkhead of Single Deck Ships

1 The moment of inertia of the side frames (including the aft wall of connecting trunk construction) between the point $0.15L$ from the bow and the collision bulkhead of the foremost cargo hold is to be not less than the value obtained from the following formula. For connecting trunk construction, the connecting trunk aft wall is to be treated as a side frame to include in the calculation of the following formula. In that case, the half-width of the connecting trunk centreline side wall may be treated as the flange of the frame:

$$I = 0.18 P \ell^4 / n \quad (cm^4)$$

P: External pressure (kN/m^2) under the maximum load condition specified in 4.4.2.2, to be calculated at the load calculation point specified in 3.7.

ℓ: Span (m) from the top of the inner bottom plating at the side (the top of the bilge hopper tank at the side for ships having bilge hopper tanks) to the bottom of deck above the side frames at the side (the bottom of the topside tank at the side for ships having topside tanks).

n: Number of frames from the collision bulkhead to the side frame in question (n = 1, 2, 3 …).

2 Where the foregoing **-1** is not directly applicable, the side frames are to be suitably stiffened, taking into account the effect of their deformation on the side shell near the fore peak bulkhead of the foremost cargo hold and the structural continuity to the fore structure.

Chapter 7 STRENGTH OF PRIMARY SUPPORTING STRUCTURES

Symbols

For symbols not defined in this Chapter, refer to **1.4**.

S: Spacing(m) of primary supporting members under consideration as specified in **3.6.2.2**. However, it is to be noted that, as to a bilge hopper plating, a side shell is regarded as an adjacent primary supporting structure and as to a side stringer above a bilge hopper plating, a bottom shell is regarded as an adjacent primary supporting structure.

ℓ_{bdg}: Effective bending span (m) of primary supporting members as specified in **3.6.1.4**

ℓ_{shr}: Effective shear span (m) of primary supporting members as specified in **3.6.1.5**

D_{sh-n50}: Effective shear depth (m) of primary supporting members as specified in **3.6.4.5**

ℓ_{DB}: Length (m) of double bottom as specified in **7.3.1.6-1**

ℓ_{DS}: Length (m) of double side as specified in **7.3.1.6-3**

ℓ_{DH}: Length (m) of double hull, given as ℓ_{DB} or ℓ_{DS}, depending on whether assessing a double bottom or a double side

B_{DB}: Breadth (m) of double bottom as specified in **7.3.1.6-2**

B_{DS}: Height (m) of double side as specified in **7.3.1.6-4**

B_{DH}: Breadth or height (m) of double hull, given as B_{DB} or B_{DS}, depending on whether assessing a double bottom or a double side

D_{DB}: When considering bending stiffness, depth (m) of double bottom is to be taken as the value at $x_{DH} = 0$ and $y_{DH} = 0$

D_{DS}: When considering bending stiffness, breadth (m) of double side

D_{DH}: Depth or breadth (m) of double hull, given as D_{DB} or D_{DS}, depending on whether assessing a double bottom or a double side

x_{DB}: X coordinate with the $\ell_{DH}/2$ point in the double bottom under assessment being $x_{DB} = 0$

x_{DS}: X coordinate with the $\ell_{DH}/2$ point in the double side under assessment being $x_{DS} = 0$

x_{DH}: X coordinate, given as x_{DB} or x_{DS}, depending on whether assessing a double bottom or a double side

y_{DH}: Y coordinate with the $B_{DB}/2$ point in the double bottom of the cargo hold under assessment being $y_{DH} = 0$

z_{DH}: Z coordinate with the $B_{DS}/2$ point in the double side of the cargo hold under assessment being $z_{DH} = 0$

z_n: Position (m) of the horizontal neutral axis of transverse section on the z coordinate for $x_{DH} = 0$

P_{DB}: Pressure (kN/m^2) for the double bottom to be calculated at the load calculation point specified in **7.3.1.5**, as specified in the requirements for loads to be considered for the strength of primary supporting structures specified in **Chapter 4, Part 2** (Requirements by ship type)

P_{DS}: Pressure (kN/m^2) for the double side to be calculated at the load calculation point specified in **7.3.1.5**, as specified in the requirements for loads to be considered for the strength of primary supporting structures specified in **Chapter 4, Part 2** (Requirements by ship type)

P_{DH}: Reference pressure (kN/m^2) for double hull, given as P_{DB} for the double bottom and as P_{DS} for the double side

α_{DH}: Aspect ratio of double hull to be taken as ℓ_{DH}/B_{DH}

C_{EX}: Coefficient for the ratio of the effective breadth of longitudinal girders in double hull as given in **Fig. 7.3.3-1**. The method for calculation of effective breadth is given in **3.6.3.1**. However, C_{EX} is to be taken as 0 where no longitudinal girder is provided.

C_{EY}: Coefficient for the ratio of the effective breadth of transverse girders in double hull as given in **Fig. 7.3.3-1**. The method for calculation of the effective breadth is given in **3.6.3.1**. However, C_{EY} is to be taken as 0 where no transverse girder is provided. For double bottom, read C_{EY}. For double side, C_{EY} is to be read as C_{EZ}.

α_{EQ}: Equivalent aspect ratio to be taken as follows:

$$\alpha_{EQ} = \sqrt[4]{\frac{C_{EY}}{C_{EX}}}\,\alpha_{DH}$$

β_B: Moment correction factor for double bottom as given in **Table 7.3.3-2**

β_S: Moment correction factor for double side as given in Table 7.3.3-3

K: Material factor as specified in 3.2.1.2

σ_{all}: Permissible bending stress (N/mm^2) to be taken as follows:

$$\sigma_{all} = \frac{235}{K}$$

τ_{all}: Permissible shear stress (N/mm^2) to be taken as follows:

$$\tau_{all} = \frac{235}{K\sqrt{3}}$$

E: Young's modulus to be taken as 206,000 (N/mm^2).

ν: Poisson's ratio to be taken as 0.3.

D_W: Web depth (m) of primary supporting members. Reference is also to be made to Fig. 7.2.5-1 for girder webs not provided with openings, Fig. 7.2.5-2 for girder webs provided with an opening reinforced by stiffeners in the girder span direction and Fig. 7.2.5-3 for girder webs provided with an unreinforced opening.

K_τ: Shear buckling factor to be taken as follows:

$$K_\tau = 5.34 + \frac{4.0}{\alpha^2}$$

α: Panel aspect ratio to be taken as follows:

$$\alpha = \frac{a}{b}$$

a: Length (mm) of the longer side of a plate panel. Reference is also to be made to Fig. 7.2.5-1 for girder webs not provided with openings, Fig. 7.2.5-2 for girder webs provided with an opening reinforced by stiffeners in the girder span direction and Fig. 7.2.5-3 for girder webs provided with an unreinforced opening.

b: Length (mm) of the shorter side of a plate panel. Reference is also to be made to Fig. 7.2.5-1 for girder webs not provided with openings. However, it is to be noted that where the plate panel is divided in the girder depth direction, this length is to be the greatest of the lengths of the resulting shorter sides. Reference is also to be made to Fig. 7.2.5-2 for girder webs provided with an opening reinforced by stiffeners in the girder span direction. However, it is to be noted that this length is to be the greatest of the lengths of the resulting shorter sides. Reference is also to be made to Fig. 7.2.5-3 for girder webs provided with an unreinforced opening.

D_0: Size (m) of manholes and other openings in the girder depth direction. Reference is also to be made to Fig. 7.2.5-2 for girder webs provided with an opening reinforced by stiffeners in the girder span direction and Fig. 7.2.5-3 for girder webs provided with an unreinforced opening.

C_{cnd}: Coefficient corresponding to the assessment condition under consideration to be taken as 1.0 and 0.85 for the maximum load condition and harbour condition, respectively.

7.1 General

7.1.1 Overview

7.1.1.1 Overview of This Chapter

This Chapter specifies the bending strength of primary supporting structures such as girders and the shear strength and shear buckling strength of webs, and specifies the buckling strength of columnar structural members subjected to axial compression.

7.1.1.2 Overview of Each Section

This Chapter specifies the requirements in Table 7.1.1-1 as those for the strength of primary supporting structures.

Table 7.1.1-1 Overview of Chapter 7

Section	Title	Overview
7.1	General	Overview of this Chapter, application thereof, etc.
7.2	Simple Girders	Requirements for girder other than those intended for double hull structures and corrugated bulkheads
7.3	Double Hulls	Requirements for girders in double bottom and double side skin
7.4	Pillars, Struts, Etc.	Requirements for the columnar buckling of structural members subjected to axial compression

7.1.2 Application

7.1.2.1 Application

1 The requirements in this Chapter are to be applied in accordance with **Table 1.2.2-1**.

2 Girders and plates to be flange in double bottom or double side constituting a double hull are to be in accordance with the requirements in **7.3**. Other girders are to be in accordance with the requirements in **7.2**. (*See* **Fig. 7.1.2-1**)

3 Constructions of single bottom are to be according to the requirements specified in **7.2**.

4 Notwithstanding **-2** and **-3** above, assessments may be carried out by direct strength calculations deemed appropriate by the Society, such as beam analysis.

7.1.2.2 Regions Subject to This Chapter

This Chapter applies to the hull structure over the full length of the ship including the fore peak, cargo hold regions, machinery spaces, the aft peak, superstructures and deckhouses.

7.1.3 Net Scantling Approach

7.1.3.1 General

The required scantlings in this Chapter are to be specified as net scantlings.

Fig. 7.1.2-1 Examples of Application of 7.2 (Simple Girders) and 7.3 (Double Hulls)

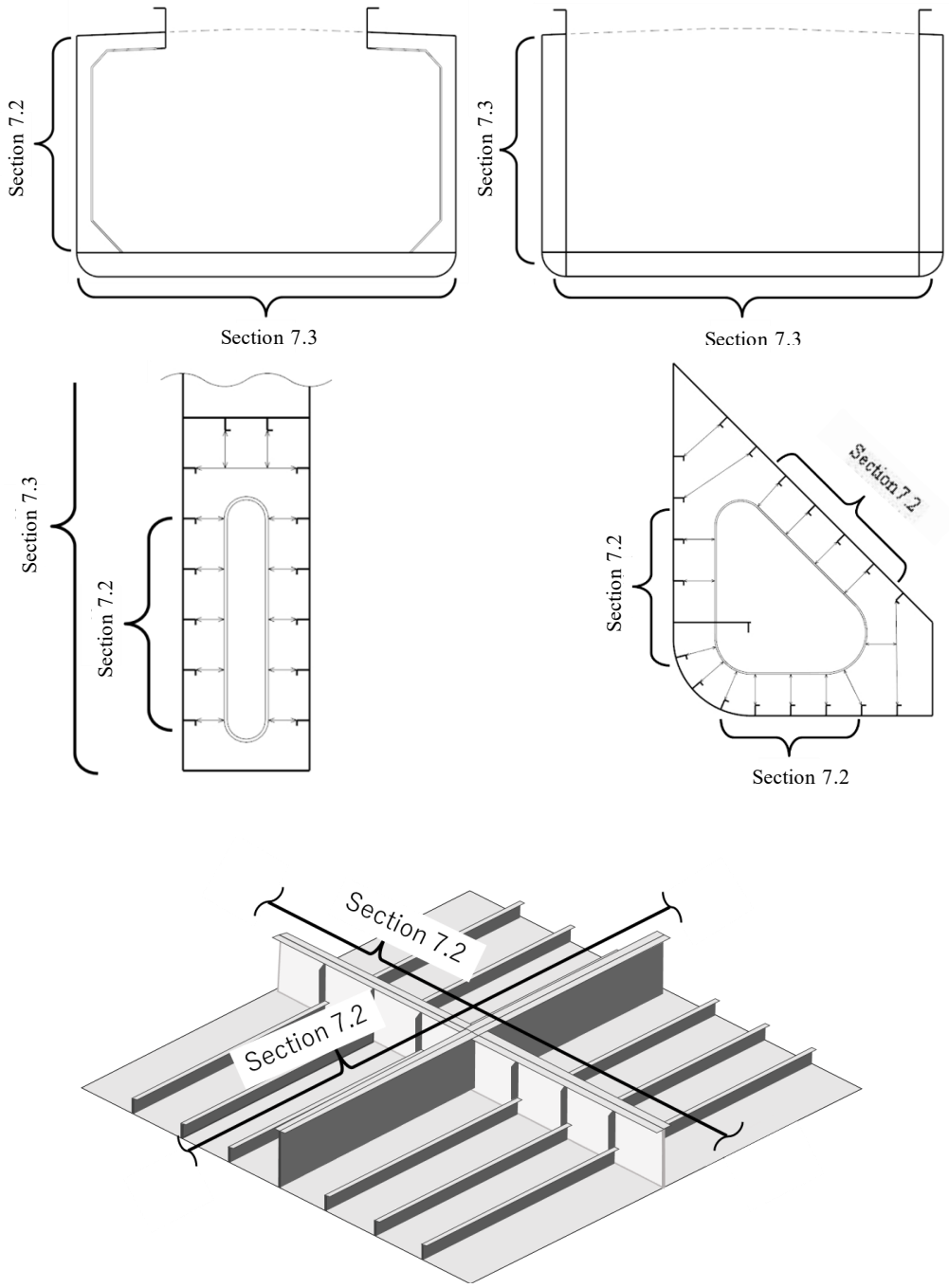

7.2 Simple Girders

7.2.1 General

7.2.1.1 Assessment Models

1 Girders are to be assessed by applying one of the assessment models shown in **Table 7.2.1-1** as appropriate for the form of load distribution and the surrounding structural arrangement. For cases not corresponding to any of the assessment models shown in **Table 7.2.1-1**, girders are to be deemed appropriate by the Society.

2 Notwithstanding **-1** above, the specific assessment models for the ship types specified in **Part 2** are to be referred to **Chapter 7, Part 2**. For members not specifically specified in **Chapter 7, Part 2**, applied models are to be deemed appropriate by the Society.

3 Where multiple loads act simultaneously, as in cases with distributed and concentrated loads acting simultaneously, assessments are to be carried out by applying the corresponding multiple assessment models.

Table 7.2.1-1 Examples of Structures and Assessment Models

	Examples of structures	Assessment models
1	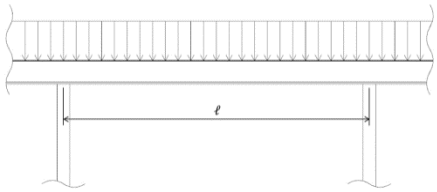	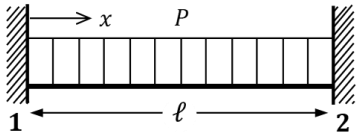
2	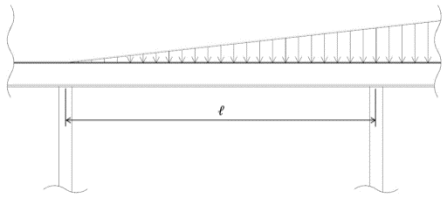	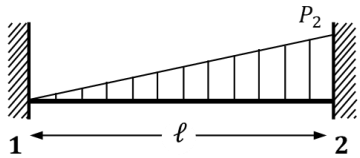
3	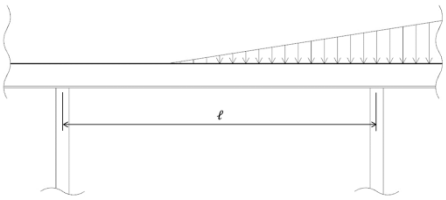	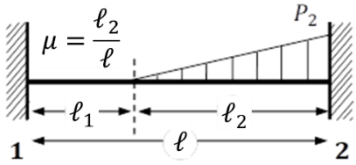
4	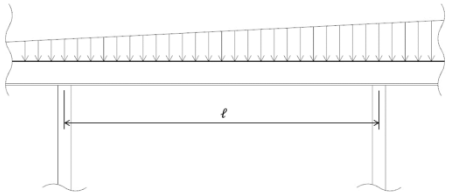	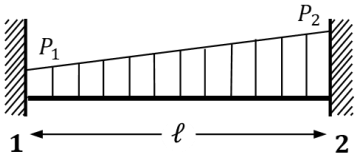
5	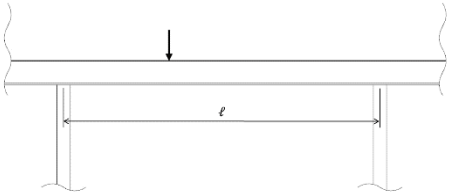	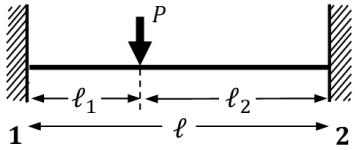
6	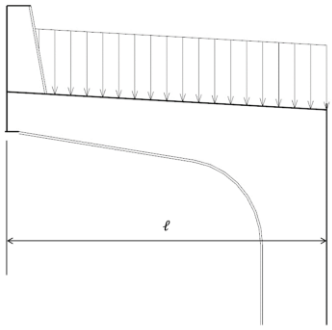	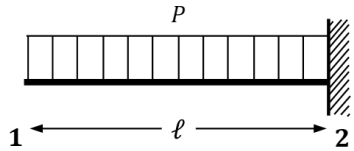
7	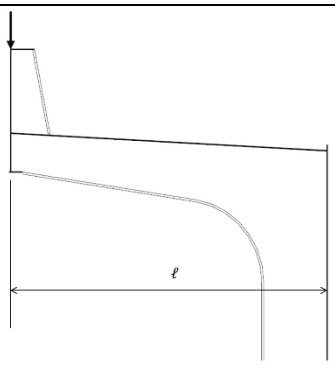	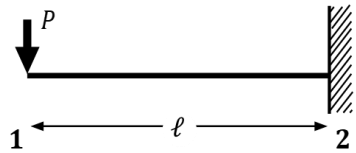

7.2.2 Assessment Conditions and Loads

7.2.2.1 General

1 Simple girders are to be assessed for strength in each of the assessment conditions of the maximum load condition, testing condition and flooded condition.

2 For longitudinal hull girder structural members, hull girder loads due to the ship's longitudinal bending are to be considered in addition to lateral loads on girder members.

3 Lateral loads are, in general, assumed to act from one side of the girder members. However, where any loads are constantly acting from the other side, such loads may be taken into account.

4 Girder members constituting watertight boundaries of compartments not intended to carry liquids, excluding girders on the shell plating and weather deck, are to be subjected to lateral loads in the flooded condition.

7.2.2.2 Assessment Conditions and Loads for Members to Be Assessed

For the members listed in **Table 7.2.2-1** and the primary supporting structural strength members constituting the boundaries of compartments, the strength assessments specified in this Chapter are to be carried out considering the lateral loads and hull girder loads specified in the table. For girders corresponding to multiple conditions, the strength assessments are to be carried out under all applicable conditions.

Table 7.2.2-1 Assessment Conditions and Loads for Members/Compartments to Be Assessed

Compartments/members to be assessed	Typical members	Assessment condition	Loads				
			Lateral load	Load type	Load components	Refer to: Load (P)	Refer to: Hull girder load (M_{V-HG}, M_{H-HG})
Girders on shell plating	Web frames, side stringers (single side skin structure)	Maximum load condition	External pressure	Seawater	Static + dynamic loads	**4.4.2.2-1**	**4.4.2.9**
Cargo oil tanks, ballast tanks, ballast holds and other tanks	Stiffening girders, corrugated bulkheads		Internal pressure	Liquid loaded	Static + dynamic loads	**4.4.2.2-2**	
Cargo holds(1)	Stiffening girders, corrugated bulkheads			Dry bulk cargoes and others	Static + dynamic loads		
Single-bottomed cargo holds	Girders, floors			Unspecified cargoes	Static + dynamic loads		
Girders on deck	Deck girders, deck transverses		Others	Green sea (weather decks only), unspecified cargoes	Green sea load, static + dynamic loads	Greater of the pressures specified in **4.4.2.2-3** and **-4**	
Internal decks(2)	Deck girders, deck transverses			Unspecified cargoes	Static + dynamic loads	**4.4.2.2-3**	
Members constituting compartments subject to hydraulic testing	Stiffening girders, corrugated bulkheads	Testing condition	Internal pressure	Seawater	Static loads	P_{ST-in1} as specified in **4.4.3.2**	**4.4.4.3**
Compartments not carrying liquids(3)	Stiffening girders, corrugated bulkheads	Flooded condition	Internal pressure	Seawater	-	**4.4.4.1**	**4.4.4.2**

(Notes)
(1) For ships of a single side skin structure for carrying cargoes other than liquids, girders on the shell plating may be excluded from the assessment.
(2) For ships carrying cargoes other than bulk and liquid cargoes with the cargoes properly fastened or otherwise held in position so that the cargo loads can be deemed as acting only on the inner bottom plating and internal deck, the assessment may be performed only for the inner bottom plating and the internal deck.
(3) Not required for girders on shell plating and weather deck.

7.2.2.3 Stress Due to Hull Girder Loads

The stress σ_{BM} (N/mm^2) due to the hull girder load at the girder to be assessed is to be obtained from the following formula. However, in case of load condition *RP* in the maximum load condition, σ_{BM} is not to be less than when $M_{V-HG} = 0$ or $M_{H-HG} = M_{WH}$.

$$\sigma_{BM} = \left[\left|\frac{M_{V-HG}}{I_{y-n50}}(z - z_n)\right| + \left|\frac{M_{H-HG}}{I_{z-n50}}y\right|\right] \times 10^5$$

M_{V-HG}: Hull girder load (vertical bending moment) corresponding to each assessment condition specified in **Table 7.2.2-1**

M_{H-HG}: Hull girder load (horizontal bending moment) considered in maximum load condition, as specified in **4.4.2.9-2**. $M_{H-HG} = 0$ in load conditions other than maximum load condition.

M_{WH}: Horizontal wave bending moment (*kN-m*) specified in **4.4.2.9-2**

I_{y-n50}: Moment of inertia (cm^4) of the hull transverse section under consideration about its horizontal neutral axis. Corrosion additions considered in the calculation are as specified in **3.3.4**.

I_{z-n50}: Moment of inertia (cm^4) of the hull transverse section under consideration about its vertical neutral axis. Corrosion additions considered in the calculation are as specified in **3.3.4**.

z: Z coordinate (m) of the load calculation point for the member under consideration

z_n Vertical distance (m) from the top of the keel in the transverse section under consideration to its horizontal neutral axis

y: Y coordinate (m) of the load calculation point for the member under consideration

The coordinate system and the load calculation points are as given in **1.4.3.6** and **3.7.3**, respectively.

7.2.3 Bending Strength

7.2.3.1 Section Modulus

In each assessment condition, the section modulus of simple girders is to be not less than that obtained from the following formula:

$$Z_{n50} = C_{Safety}\frac{|M|}{\sigma_{all} - \sigma_{BM}} \times 10^3 \ (cm^3)$$

C_{Safety}: Safety factor, to be taken as 1.1

M: Maximum moment (*kN-m*) of the assessment model as specified in **7.2.3.2**

σ_{all}: Permissible bending stress (N/mm^2) to be taken as follows:

$$\sigma_{all} = \frac{235}{K}$$

K: Material factor as specified in **3.2.1.2**

σ_{BM}: Stress (N/mm^2) due to the hull girder load at the girder to be assessed as specified in **7.2.2.3**. However, for members other than longitudinal hull girder structural members, σ_{BM} is to be taken as 0.

7.2.3.2 Moments

1 Members of interest are to be assessed based on the moment in an appropriate assessment model selected from **Table 7.2.3-1** according to their boundary condition and load distribution. For cases not corresponding to any of the assessment models shown in **Table 7.2.3-1**, moments are to be deemed appropriate by the Society.

2 Where multiple loads act simultaneously, as in cases where distributed and concentrated loads act simultaneously, the assessment is to be carried out by the summation of the moments in the respective assessment models.

Table 7.2.3-1 Moments and Shear Forces

	Assessment model	M	F
1	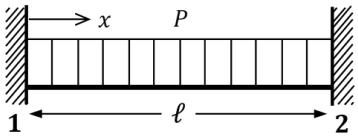 $P = P_1 = P_2$	$M_1 = M_2 = \frac{SP\ell_{bdg}^2}{12}$	$F_1 = F_2 = \frac{SP\ell_{shr}}{2}$
2	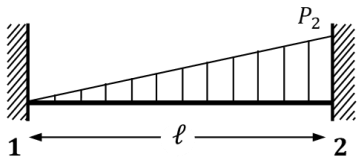 $P_1 = 0$	$M_1 = \frac{SP_2\ell_{bdg}^2}{30}$ $M_2 = \frac{SP_2\ell_{bdg}^2}{20}$	$F_1 = \frac{3SP_2\ell_{shr}}{20}$ $F_2 = \frac{7SP_2\ell_{shr}}{20}$
3	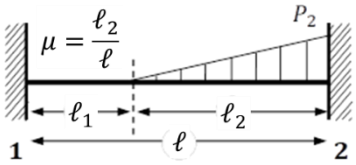	$M_1 = -\frac{SP_2\ell_{bdg}^2}{60}(3\mu^4 - 5\mu^3)$ $M_2 = \frac{SP_2\ell_{bdg}^2}{60}(3\mu^4 - 10\mu^3 + 10\mu^2)$	$F_1 = -\frac{SP_2\ell_{shr}}{20}(2\mu^4 - 5\mu^3)$ $F_2 = \frac{SP_2\ell_{shr}}{20}(2\mu^4 - 5\mu^3 + 10\mu)$
4	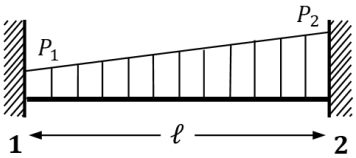	$M_1 = \frac{S\ell_{bdg}^2}{60}(3P_1 + 2P_2)$ $M_2 = \frac{S\ell_{bdg}^2}{60}(2P_1 + 3P_2)$	$F_1 = \frac{S\ell_{shr}}{20}(7P_1 + 3P_2)$ $F_2 = \frac{S\ell_{shr}}{20}(3P_1 + 7P_2)$
5	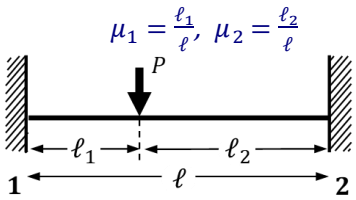	$M_1 = P\mu_1\mu_2^2\ell_{bdg}$ $M_2 = P\mu_1^2\mu_2\ell_{bdg}$	$F_1 = P\mu_2^2(3\mu_1 + \mu_2)$ $F_2 = P\mu_1^2(3\mu_2 + \mu_1)$

S: Breadth (m) of the area supported by the girder

ℓ: Full length (m) of the girder

ℓ_{bdg}: Effective bending span (m) of the girder as given in **3.6.1.4**

ℓ_{shr}: Effective shear span (m) of the girder as given in **3.6.1.5**

P: Load corresponding to each assessment condition specified in **Table 7.2.2-1** to be taken as follows depending on the assessment model

Assessment Model 1: Uniform load (kN/m^2) acting on the girder

Assessment Model 5: Concentrated load (kN) acting on the girder

P_1 and P_2: Loads corresponding to each assessment condition specified in **Table 7.2.2-1** to be taken as follows depending on the assessment model:

Assessment Models 2, 3 and 4: Loads (kN/m^2) acting on the ends of the girder to be calculated at both ends of the full length ℓ of the girder.

7.2.4 Shear Strength

7.2.4.1 Web Thickness

In each assessment condition, the web thickness of simple girders is to be not less than that obtained from the following formula:

$$t_{n50} = C_{Safety}\frac{|F|}{D_{sh-n50}\tau_{all}} \ (mm)$$

C_{Safety}: Safety factor to be taken as 1.2

F: Maximum shear force (kN) of the assessment model as specified in 7.2.4.2

D_{sh-n50}: Shear depth (m) as given in 3.6.4.5

τ_{all}: Permissible shear stress (N/mm^2) to be taken as follows:

$$\tau_{all} = \frac{235}{K\sqrt{3}}$$

K: Material factor as specified in 3.2.1.2

7.2.4.2 Shear Forces

1 Members of interest are to be assessed based on the shear force in an appropriate assessment model selected from Table 7.2.3-1 according to their boundary condition and load distribution. For cases not corresponding to any of the assessment models shown in Table 7.2.3-1, Shear forces are to be deemed appropriate by the Society.

2 Where multiple loads act simultaneously, as in cases where distributed and concentrated loads are applied simultaneously, the assessment is to be carried out by the summation of the shear forces in the respective assessment models.

7.2.5 Shear Buckling Strength

7.2.5.1 Web Thickness

The web thickness of simple girders is to be not less than that obtained from the formulae shown in the following **(1)** to **(3)** for each assessment condition:

(1) For girder webs with no opening

$$t = \sqrt[3]{C_{Safety}\frac{|F|b^2}{D_w}\frac{12(1-\nu^2)}{K_\tau \pi^2 E}} \ (mm)$$

C_{Safety}: Safety factor to be taken as 1.2

F: Maximum shear force (kN) of the assessment model as specified in 7.2.4.2

D_W: Web depth (m) of the primary supporting members (*See* Fig. 7.2.5-1)

K_τ: Shear buckling factor to be taken as follows:

$$K_\tau = 5.34 + \frac{4.0}{\alpha^2}$$

α: Panel aspect ratio to be taken as follows:

$$\alpha = \frac{a}{b}$$

a: Length (mm) of the longer side of the plate panel (*See* Fig. 7.2.5-1)

b: Length (mm) of the shorter side of the plate panel. Where the plate panel is divided in the girder depth direction, this length is to be the greatest of the lengths of the resulting shorter sides. (*See* Fig. 7.2.5-1)

ν: Poisson's ratio to be taken as 0.3

E: Young's modulus to be taken as 206,000 (N/mm^2)

(2) For girder webs provided with an opening reinforced by stiffeners in the girder span direction

$$t = \sqrt[3]{C_{Safety}\frac{|F|b^2}{D_w - D_0}\frac{12(1-\nu^2)}{K_\tau \pi^2 E}} \ (mm)$$

C_{Safety}: Safety factor to be taken as 1.2

F: Maximum shear force (kN) of the assessment model as specified in 7.2.4.2

D_W: Web depth (m) of the primary supporting members (*See* Fig. 7.2.5-2)

K_τ: Shear buckling factor to be taken as follows:

$$K_\tau = 5.34 + \frac{4.0}{\alpha^2}$$

D_0: Size (m) of manholes and other openings in the girder depth direction (*See* Fig. 7.2.5-2)

α: Panel aspect ratio to be taken as follows:

$$\alpha = \frac{a}{b}$$

a: Length (mm) of the longer side of the plate panel (*See* **Fig. 7.2.5-2**)

b: Length (mm) of the shorter side of the plate panel, which is to be the greatest of the lengths of the resulting shorter sides (*See* **Fig. 7.2.5-2**)

ν: Poisson's ratio to be taken as 0.3

E: Young's modulus to be taken as 206,000 (N/mm^2)

(3) For girder webs provided with an opening (an unreinforced opening)

$$t = \sqrt[3]{C_{Safety}\frac{|F|b^2}{D_w}\frac{12(1-\nu^2)}{\gamma_{a_0}K_\tau\pi^2E}} \ (mm)$$

C_{Safety}: Safety factor to be taken as 1.2

F: Maximum shear force (kN) of the assessment model as specified in **7.2.4.2**

D_W: Web depth (m) of the primary supporting members (*See* **Fig. 7.2.5-3**)

K_τ: Shear buckling factor to be taken as follows:

$$K_\tau = 5.34 + \frac{4.0}{\alpha^2}$$

γ_{a_0}: Coefficient of the effect of an opening, such as a manhole, on shear buckling to be taken as follows:

$$\gamma_{a_0} = \left(1 + \frac{D_0}{2a} \times 10^3\right)^{-2}$$

D_0: Size (m) of manholes and other openings in the girder depth direction (*See* **Fig. 7.2.5-3**)

α: Panel aspect ratio to be taken as follows:

$$\alpha = \frac{a}{b}$$

a: Length (mm) of the longer side of the plate panel (*See* **Fig. 7.2.5-3**)

b: Length (mm) of the shorter side of the plate panel (*See* **Fig. 7.2.5-3**)

ν: Poisson's ratio to be taken as 0.3

E: Young's modulus to be taken as 206,000 (N/mm^2)

Fig. 7.2.5-1 Parameter Settings for a Girder Web with No Opening

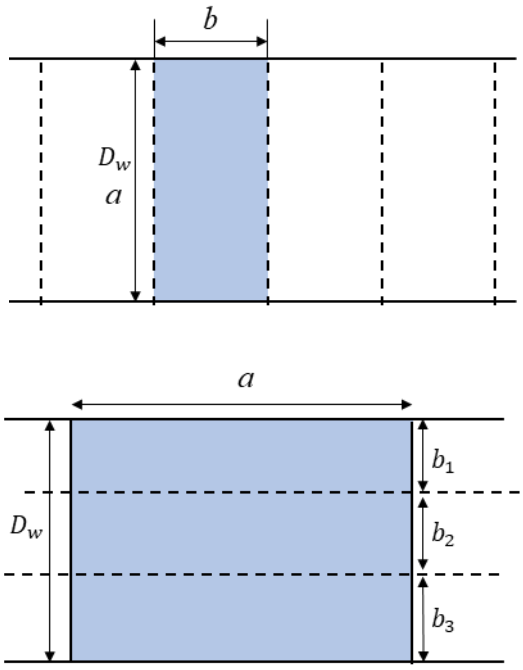

$$b = \max(b_1, b_2, b_3)$$

Fig. 7.2.5-2 Parameter Settings for an Opening Reinforced by Stiffeners in the Girder Span Direction

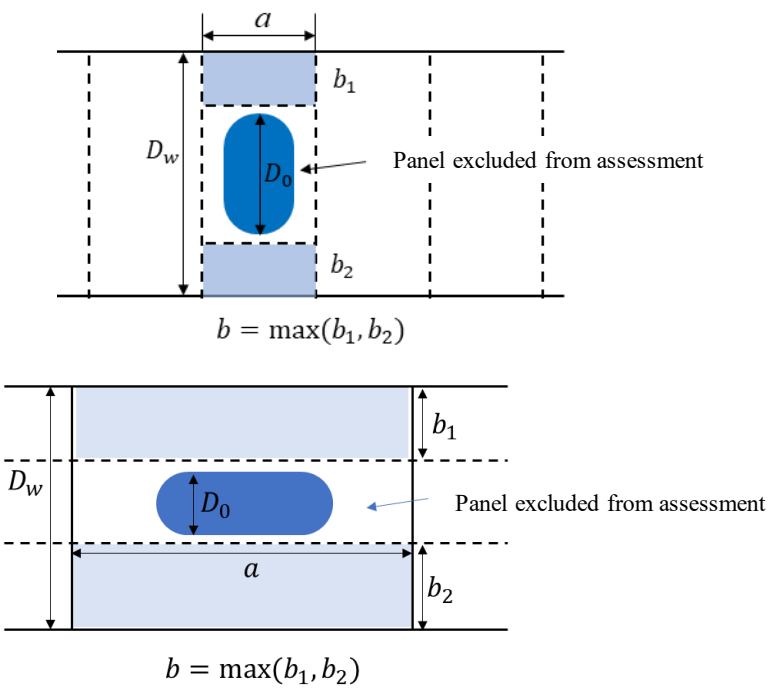

Fig. 7.2.5-3 Parameter Settings for a Girder Web with an Opening (Unreinforced Opening)

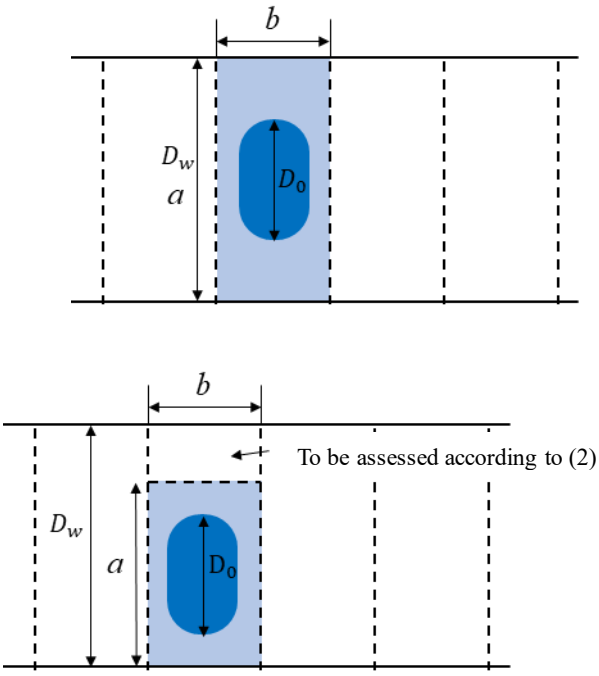

7.2.6 Bending Stiffness

7.2.6.1 Depth of Girders

For the members specified in Table 7.2.6-1, depth is not to be less than that specified in the table. However, the depth may be reduced provided that the member has equivalent moment of inertia or deflection to the required members.

Table 7.2.6-1 Depth of Girders

Members	Depth of Girders (m)
Web frame	$0.1\ell_{bdg}$
Web frame supporting cantilever	$0.125\ell_{bdg}$
Web frame supporting side stringer	$0.125\ell_{bdg}$
Side stringer	$0.125\ell_{bdg}$
Side stringer forward of collision bulkhead	$0.2\ell_{bdg}$
Web frame forward of collision bulkhead	$0.2\ell_{bdg}$

Note:

ℓ_{bdg}: Effective bending span (m) of the girder as given in 3.6.1.4

7.2.6.2 Moment of Inertia of Girders*

For the members specified in Table 7.2.6-2, moment of inertia is not to be less than that obtained from following formula. However, the loads acting on the members is not distributed loads, the moment of inertia is to be deemed appropriate by the Society.

$$I = \frac{SP\ell_{bdg}{}^4}{384E\delta} \times 10^8 (cm^4)$$

S : Spacing of girders (m)

P : Loads corresponding to each member as given in Table 7.2.6-2. Loads are to be calculated at the middle of ℓ

ℓ_{bdg}: Effective bending span (m) of the girder as given in 3.6.1.4

E: Young's modulus to be taken as 206,000 (N/mm^2)

δ : Allowable values for deflection of girders as specified in Table 7.2.6-2

Table 7.2.6-2 Allowable values for deflection of girders

	Loads P	Allowable values δ
Girders attached to decks(except for cantilever)	Static pressure P_{dks} of cargo specified in 4.4.2.7 and green sea pressure P_{GW} specified in 4.4.2.8, whichever is greater.	$\ell/1340 \times 10^3$
Girders supporting stiffeners attached to watertight bulkheads	Internal Pressure P_{FD-in} in flooded condition specified in 4.4.4.1	$S/670 \times 10^3$
Girders supporting stiffeners in deep tanks	Static pressure P_{ls} specified in 4.4.2.4	$S/2000 \times 10^3$

7.2.7 Corrugated Bulkheads

7.2.7.1 General

1 Corrugated bulkheads are to be assessed for strength in each of the three assessment conditions of the maximum load condition, hydraulic test condition and flooded condition.

2 With the $1/2$ pitch of the corrugated bulkhead regarded as a girder, the section modulus is to be in accordance with the requirements in 7.2.7.2. The same is to apply to the web thickness within 0.2ℓ from the upper and lower ends of the corrugated bulkhead.

3 Where the width d_H in the ship's length direction of the lower stool at the inner bottom plating is less than 2.5 times the web depth d_0 of the bulkhead, the section modulus per $1/2$ pitch of the corrugated bulkhead of the lower stool at the inner bottom plating is to be in accordance with the requirements in 7.2.7.2-1 in addition to **-2** above.

4 Notwithstanding **-1** to **-3** above, horizontal corrugated bulkheads are to be as deemed appropriate by the Society.

7.2.7.2 Strength Assessment

1 The section modulus per $1/2$ pitch of corrugated bulkheads (*See* Fig. 7.2.7-1) is to be in accordance with the following **(a)** and **(b)**:

(a) The section modulus per $1/2$ pitch of corrugated bulkheads in the maximum load condition and the testing condition is to be not less than that obtained from the following formula:

$$Z_{n50} = C_{Safety}\frac{C_x + 1}{2f\,C_x}\frac{|M|}{\sigma_{all}} \times 10^3\ (cm^3)$$

C_{Safety}: Safety factor to be taken as 1.0

C_x: Coefficient considering buckling of the flange (face plate) to be taken as follows:

$$C_x = \frac{2.25}{\beta} - \frac{1.25}{\beta^2}$$

For: $\beta = \frac{b_f}{t_{f-n50}}\sqrt{\frac{\sigma_Y}{E}}$

b_f: Flange breadth (mm)

t_{f-n50}: Flange thickness (mm)

σ_Y: Specified minimum yield stress (N/mm^2)

E: Young's modulus to be taken as 206,000 (N/mm^2)

f: Shape coefficient to be taken as 1.1

M: Bending moment (kN-m) due to the applied load as specified in **7.2.7.3-1**

σ_{all}: Permissible bending stress (N/mm^2) to be taken as follows:

$$\sigma_{all} = \frac{235}{K}$$

K: Material factor as specified in **3.2.1.2**

(b) The section modulus per $1/2$ pitch of corrugated bulkheads in the flooded condition is to be not less than that obtained from the following formula:

$$Z_{n50} = C_{Safety}\frac{C_x + 1}{2f\,C_x}\frac{|M_P|}{\sigma_{all}} \times 10^3\ (cm^3)$$

C_{Safety}: Safety factor to be taken as 1.0

C_x: As specified in **(a)** above

f: Shape coefficient to be taken as 1.1

σ_{all}: Permissible bending stress (N/mm^2) to be taken as follows:

$$\sigma_{all} = \frac{235}{K}$$

K: Material factor as specified in **3.2.1.2**

M_P: Plastic moment as specified in **7.2.7.3-2**

(c) The actual section modulus per $1/2$ pitch of corrugated bulkheads is to be obtained from the following:

$$\frac{b_f\,t_{f-n50}d_0}{2000} + \frac{b_w t_{w-n50}d_0}{6000}\ (cm^3)$$

b_f and b_w: Flange and web breadths (mm), respectively

t_{f-n50} and t_{w-n50}: Flange and web thicknesses (mm), respectively

d_0: Corrugation depth (mm)

2 In each assessment condition, the web thickness within 0.2ℓ from the upper and lower ends of the corrugated bulkhead is to be not less than that obtained from the following formula based on shear strength:

$$t_{n50} = C_{Safety}\frac{|F|}{D_{sh}\tau_{all}}\ (mm)$$

C_{Safety}: Safety factor to be taken as 1.2

F: Maximum shear force (kN) of the assessment model as specified in **7.2.7.3-1**

D_{sh}: Shear depth (m) to be taken as $(b_w \times 10^{-3})\cos\theta$

θ : Angle of corrugation as specified in **Table 7.2.7-1**

τ_{all}: Permissible shear stress (N/mm^2) to be taken as follows:

$$\tau_{all} = \frac{235}{K\sqrt{3}}$$

K: Material factor as specified in **3.2.1.2**

3 In each assessment condition, the web thickness within 0.2ℓ from the upper and lower ends of the corrugated bulkhead is to be not less than that obtained from the following formula based on shear buckling strength:

$$t = \sqrt[3]{C_{Safety}\frac{|F|b^2}{D_{sh}}\frac{12(1-\nu^2)}{K_\tau \pi^2 E}}\ (mm)$$

C_{Safety}: Safety factor to be taken as 1.2

F: Maximum shear force (kN) of the assessment model as specified in 7.2.7.3-1

D_{sh}: Shear depth (m) to be taken as $(b_w \times 10^{-3}) \cos\theta$

θ : Angle of corrugation as specified in Table 7.2.7-1

K_τ: Shear buckling factor to be taken as 5.34

ν: Poisson's ratio to be taken as 0.3

E: Young's modulus to be taken as 206,000 (N/mm^2)

Fig. 7.2.7-1 1/2 pitch of Corrugated Bulkheads

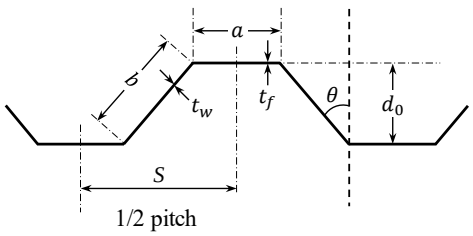

7.2.7.3 Moments and Shear forces

1 Moments and shear forces are to be in accordance with the following **(1)** and **(2)**:

(1) As specified in Table 7.2.7-1 in cases where no lower stool is provided or where the width d_H in the ship's length direction of the lower stool at the inner bottom plating is not less than 2.5 times the web depth d_0 of the bulkhead.

(2) As specified in Table 7.2.7-2 in cases where the width d_H in the ship's length direction of the lower stool at the inner bottom plating is less than 2.5 times the web depth d_0 of the bulkhead.

2 The plastic moment M_P used for bending strength assessment in the flooded condition is to be in accordance with Table 7.2.7-3.

Table 7.2.7-1 Moments and Shear Forces (with $d_H \geq 2.5d_0$)

Upper end of bulkhead	Lower end of bulkhead	Load distribution	Assessment model	Lower part of corrugated bulkhead (Point 2 in assessment model)	
				Moment	Shear force F
Supported by girder Connected to stool	Supported by girder Connected to double bottom Connected to stool	Pressure P_1 at the upper end of $\ell \geq 0$	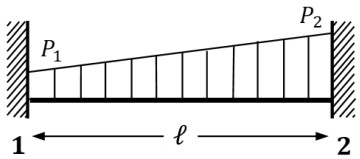	$M_2 = \frac{S\ell^2}{60}(2P_1 + 3P_2)$	$F_2 = \frac{S\ell}{20}(3P_1 + 7P_2)$
		Midspan pressure = 0	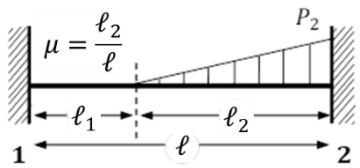	$M_2 = \frac{SP_2\ell^2}{60}(3\mu^4 - 10\mu^3 + 10\mu^2)$	$F_2 = \frac{SP_2\ell}{20}(2\mu^4 - 5\mu^3 + 10\mu)$
Connected to deck	Supported by girder Connected to double bottom Connected to stool	Pressure P_1 at the upper end of $\ell \geq 0$	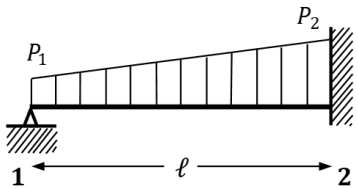	$M_2 = \frac{S\ell^2}{120}(7P_1 + 8P_2)$	$F_2 = \frac{S\ell}{40}(9P_1 + 16P_2)$
		Midspan pressure = 0	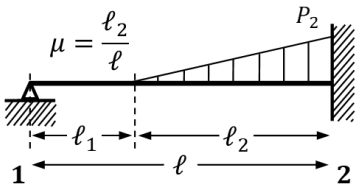	$M_2 = \frac{SP_2\ell^2}{120}(3\mu^4 - 15\mu^3 + 20\mu^2)$	$F_2 = \frac{SP_2\ell}{40}(\mu^4 - 5\mu^3 + 20\mu)$

ℓ: Length (m) between the supporting points as specified in Fig. 7.2.7-2 and -3

ℓ_1: Length (m) from one end of ℓ to the zero pressure point to be taken as $\ell_1 = \ell - \ell_2$

ℓ_2: Length (m) from the other end of ℓ to the zero pressure point

P_1 and P_2: Loads (kN/m^2) corresponding to each assessment condition specified in Table 7.2.2-1 to be calculated at the upper and lower ends of ℓ of the girder, respectively. However, where an upper stool is provided, P_1 is to be calculated at the deck level.

S: Breadth of 1/2 pitch (m) of the corrugation

Table 7.2.7-2 Moments and Shear Forces (with $d_H < 2.5d_0$)

Upper end of bulkhead	Lower end of bulkhead	Load distribution	Assessment model	Lower part of corrugated bulkhead		Lower stool at inner bottom plating
				Moment M	Shear force F	Moment M
Supported by girder Connected to stool	Supported by girder Connected to deck or double bottom Connected to stool	Pressure P_1 at the upper end of ℓ ≥ 0	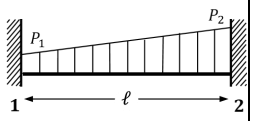	$M = \max(\lvert M_1\rvert, \lvert M_a\rvert)$ $M_1 = \frac{S\ell^2}{60}(3P_1 + 2P_2)$ $M_a = \frac{S\ell^2}{60}\begin{bmatrix} 10(P_2 - P_1)\alpha^3 + 30P_1\alpha^2 \\ -3(7P_1 + 3P_2)\alpha + 3P_1 + 2P_2 \end{bmatrix}$	$F = \max(\lvert F_1\rvert, \lvert F_a\rvert)$ $F_1 = -\frac{S\ell}{20}(7P_1 + 3P_2)$ $F_a = \frac{S\ell}{20}[10(P_2 - P_1)\alpha^2 + 20P_1\alpha - 7P_1 - 3P_2]$	$M_2 = \frac{S\ell^2}{60}(2P_1 + 3P_2)$
		Midspan pressure $= 0$	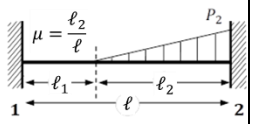	$M = \max(\lvert M_1\rvert, \lvert M_a\rvert)$ $M_1 = -\frac{SP_2{\ell_2}^2}{60}(3\mu^2 - 5\mu)$ $M_a = \frac{SP_2{\ell_2}^2}{60}[(6\mu^2 - 15\mu + 10)\alpha - 3\mu^2 + 5\mu]$ $-\frac{SP_2{\ell_2}^2}{6}\alpha$ $+\left[\frac{SP_2}{6\ell_2}(\alpha\ell - \ell_1)^3\right]$	$F = \max(\lvert F_1\rvert, \lvert F_a\rvert)$ $F_1 = \frac{SP_2\ell_2}{20}(2\mu^3 - 5\mu^2)$ $F_a = \frac{SP_2\ell_2}{20}(2\mu^3 - 5\mu^2) + \left[\frac{SP_2}{2\ell_2}(\alpha\ell - \ell_1)^2\right]$	$M_2 = \frac{SP_2{\ell_2}^2}{60}(3\mu^2 - 10\mu$
Connected to deck	Supported by girder Connected to deck or double bottom Connected to stool	Pressure P_1 at the upper end of ℓ ≥ 0	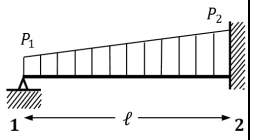	$M = \max(\lvert M_a\rvert, \lvert 0.6M_2\rvert)$ $M_a = \frac{S\ell^2\alpha}{120}\begin{bmatrix} 20(P_2 - P_1)\alpha^2 + 60P_1\alpha \\ -33P_1 - 12P_2 \end{bmatrix}$	$F = \max(\lvert F_1\rvert, \lvert F_a\rvert)$ $F_1 = -\frac{S\ell}{40}(11P_1 + 4P_2)$ $F_a = \frac{S\ell}{40}[20(P_2 - P_1)\alpha^2 + 40P_1\alpha - 11P_1$ $- 4P_2]$	$M_2 = \frac{S\ell^2}{120}(7P_1 + 8P_2)$
		Midspan pressure $= 0$	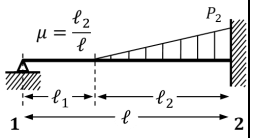	$M = \max(\lvert M_a\rvert, \lvert 0.6M_2\rvert)$ $M_a = \frac{SP_2\ell_2\ell\alpha}{40}(\mu^3 - 5\mu^2) + \left[\frac{SP_2}{6\ell_2}(\alpha\ell - \ell_1)^3\right]$	$F = \max(\lvert F_1\rvert, \lvert F_a\rvert)$ $F_1 = \frac{SP_2\ell_2}{40}(\mu^3 - 5\mu^2)$ $F_a = \frac{SP_2\ell_2}{40}(\mu^3 - 5\mu^2) + \left[\frac{SP_2}{2l_2}(\alpha\ell - \ell_1)^2\right]$	$M_2 = \frac{SP_2{\ell_2}^2}{120}(3\mu^2 - 15\mu + 20)$

ℓ, ℓ_1 and ℓ_2: As given in **Table 7.2.7-1**

P_1 and P_2: Loads (kN/m^2) corresponding to each assessment condition specified in **Table 7.2.2-1** to be calculated at the web centre of the upper and lower ends of ℓ of the girder, respectively. However, where an upper stool is provided, P_1 is to be calculated at the deck level.

S: Breadth of 1/2 pitch (m) of the corrugation

α: $\frac{\ell - h_S}{\ell}$

h_S: Height (m) of the lower stool

Fig. 7.2.7-2 Measurement of ℓ

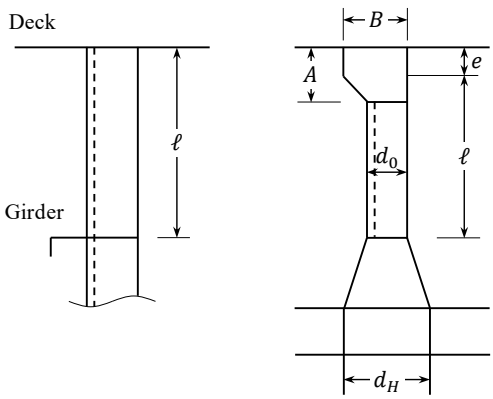

$$e = A - \frac{d_0}{2B} A \times 10^{-3}$$

(Note)

Where the stool top plate is slanted, the lower end of ℓ is to be positioned to intersect at the centre point of the web depth with the stool top plate.

Fig. 7.2.7-3 Measurement of ℓ with $d_H/d_0 < 2.5$

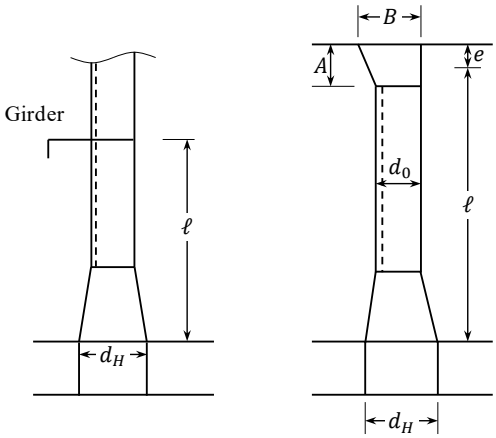

$$e = A - \frac{d_0}{2B} A \times 10^{-3}$$

Table 7.2.7-3 Plastic Moments

Lower end		Upper end	
		Connected to stool Supported by girder	Connected to deck
(1)	Supported by girder Connected to deck or double bottom	$\dfrac{P_b S \ell^2}{4(2 + \frac{z_1'}{z_0'} + \frac{z_2'}{z_0'})}$	$\dfrac{P_b S \ell^2}{4(2 + \frac{z_2'}{z_0'})}$
(2)	Connected to stool	$\dfrac{P_S S(\ell + h_S)^2}{4(2 + \frac{z_1'}{z_0'} + \frac{d_H}{d_0})}$	$\dfrac{P_S S(\ell + h_S)^2}{4(2 + \frac{d_H}{d_0})}$
		Not to be less than the value in **(1)**.	

P_b: Load (kN/m^2) acting on the bulkhead to be taken as follows:

$$P_b = \frac{P_1 + P_2}{2}$$

P_S: Load (kN/m^2) acting on the bulkhead and lower stool to be taken as follows:

$$P_b = \frac{P_1 + P_3}{2}$$

P_1 and P_2: Loads (kN/m^2) in the flooded condition specified in **Table 7.2.2-1** to be calculated at the upper and lower ends of ℓ, respectively.

However, where an upper stool is provided, P_1 is to be calculated at the deck level.

P_3: Load (kN/m^2) in the flooded condition specified in **Table 7.2.2-1** to be calculated at the lower end of the lower stool

S: 1/2 pitch (m) of the corrugation

ℓ: Length (m) between the supporting points as specified in **Fig. 7.2.7-2**

d_0: Corrugation depth (mm)

d_H: Breadth (mm) of the stool on the top of the inner bottom plating

Z_i': Plastic section modulus considering the effect of buckling to be taken as follows:

$$Z_i' = \frac{2C_{xi}}{C_{xi}+1} f Z_i \qquad (i = 0, 1, 2)$$

Where:

$$C_{xi} = \frac{2.25}{\beta_i} - \frac{1.25}{\beta_i^2} \qquad (i = 0, 1, 2)$$

$$\beta_i = \frac{b_f}{t_{fi-n50}} \sqrt{\frac{\sigma_Y}{E}} \qquad (i = 0, 1, 2)$$

Z_0 and t_{f0-n50}: Minimum section modulus (cm^3) per 1/2 pitch and minimum thickness (mm) of the flange of midpart for 0.6ℓ of the corrugated bulkhead, respectively

Z_1 and t_{f1-n50}: Minimum section modulus (cm^3) per 1/2 pitch and the minimum thickness (mm) of the flange at the upper end of the bulkhead, respectively

Z_2 and t_{f2-n50}: Minimum section modulus (cm^3) per 1/2 pitch and the minimum thickness (mm) of the flange at the lower end of the bulkhead, respectively

σ_Y: Specified minimum yield stress (N/mm^2)

E: Young's modulus to be taken as 206,000 (N/mm^2)

f: Shape coefficient to be taken as 1.1

7.2.8 Web Frames

7.2.8.1 Application

1 **7.2.8** applies to web frames in multi-deck ships with two or more decks as defined in the following **(1)** and **(2)**:

(1) Web frames extending continuously from the inner bottom plating to the freeboard deck. The "web frames" meant here include the adjacent side frames above and below the web frame (in cases of ships with both longitudinal and transverse framing systems). Web frames in single-deck ships are to be in accordance with the requirements in **7.2.3** to **7.2.5**.

(2) Web frames supporting cantilever beams

2 The web frames specified in **-1(1)** and **(2)** above are to be in accordance with the requirements in **7.2.8.2** and **7.2.8.3**, respectively.

3 Notwithstanding **-2** above, web frames may be assessed based on the moments and shear forces obtained by direct strength calculations such as beam analysis.

Fig. 7.2.8-1 Example of Application

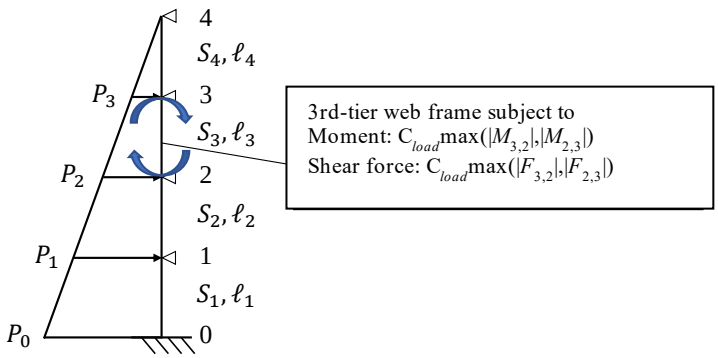

7.2.8.2 Multi-Deck Ship Web Frames Subject to External Pressure

The scantlings of web frames are to be in accordance with the requirements in 7.2.3 to 7.2.5. The bending moments and shear forces to be considered in applying 7.2.3 to 7.2.5 are to be 1.1 times the greater of their respective absolute values at the upper and lower ends of web frames (*See* Fig. 7.2.8-1). Nodal bending moments and shear forces are to be in accordance with the following **(1)** and **(2)**, respectively:

(1) Moments acting on web frames at each node are to be in accordance with the following **(a)** and **(b)**:

(a) The moment $M_{i,i-1}$ (*kN-m*) acting on a web frame with node i being its upper end (the moment at the upper end of the web frame) is to be taken as follows (*See* Fig. 7.2.8-2):

i) For $i = n$

$$M_{n,n-1} = 0$$

ii) For $1 \le i \le n-1$

$$M_{i,i-1} = \frac{1}{2}(C_{i,i-1} - C_{i,i+1} + \emptyset_{i-1} - \emptyset_{i+1})$$

(b) The moment $M_{i,i+1}$ (*kN-m*) acting on a web frame with node i being its lower end (the moment at the lower end of the web frame) is to be taken as follows (*See* Fig. 7.2.8-2):

i) For $1 \le i \le n-1$

$$M_{i,i+1} = -\frac{1}{2}(C_{i,i-1} - C_{i,i+1} + \emptyset_{i-1} - \emptyset_{i+1})$$

ii) For $i = 0$

$$M_{0,1} = -\frac{1}{4}(C_{1,2} + C_{1,0} - \emptyset_0 + \emptyset_2) - C_{0,1}$$

$C_{i,i-1}$: Coefficient to be taken as follows:

$$C_{i,i-1} = \frac{S_i \ell_i^{\,2}}{60}(3P_i + 2P_{i-1}) \qquad (0 < i \le n-1)$$

$C_{i,i+1}$: Coefficient to be taken as follows:

i) For $0 \le i \le n-2$

$$C_{i,i+1} = -\frac{S_{i+1}\ell_{i+1}^{\,2}}{60}(2P_{i+1} + 3P_i)$$

ii) For $i = n-1$

$$C_{n-1,n} = -\frac{S_n \ell_n^{\,2}}{120}(7P_n + 8P_{n-1})$$

$\emptyset_i$: Coefficient to be taken as follows:

i) For $i = 0$

$$\phi_0 = 0$$

ii) For $1 \le i \le n-1$

$$\phi_i = -\frac{1}{4}(C_{i,i-1} + C_{i,i+1})$$

iii) For $i = n$

$$\phi_n = -\frac{1}{2}\phi_{n-1}$$

S_i: Spacing (*m*) of the web frame in the *i*-th tier from the inner bottom plating

ℓ_i: Span (*m*) of the web frame in the *i*-th tier from the inner bottom plating

P_i: Load (*kN/m*^{2}) due to the external load at node *i* in the maximum load condition as specified in 4.4.2.1-1

(2) Nodal shear forces acting on web frames are to be in accordance with the following **(a)** and **(b)**:

(a) The shear force $F_{i,i-1}$ (*kN*) acting on a web frame with node i being its upper end (the shear force at the upper end of the web frame) is to be taken as follows:

$$F_{i,i-1} = -\frac{1}{\ell_i}(M_{i,i-1} + M_{i-1,i}) - \frac{\ell_i}{6}(2S_iP_i + S_{i-1}P_{i-1}) \qquad (1 \le i \le n)$$

(b) The shear force $F_{i,i+1}$ (*kN*) acting on a web frame with node i being its lower end (the shear force at the lower end of the web frame) is to be taken as follows:

i) For $0 \le i \le n-1$

$$F_{i,i+1} = -\frac{1}{\ell_{i+1}}(M_{i+1,i} + M_{i,i+1}) + \frac{\ell_{i+1}}{6}(S_{i+1}P_{i+1} + 2S_iP_i)$$

ii) For $i = 0$

$$F_{0,1} = -\frac{1}{\ell_1}\left(M_{1,0} + M_{0,1}\right) + \frac{\ell_1}{6}\left(S_1P_1 + 2S_1P_0\right)$$

$M_{1,0}$, $M_{0,1}$, $M_{i+1,i}$, $M_{i,i+1}$, ℓ_i, S_i and P_i: As specified in **(1)** above

Fig. 7.2.8-2 Moment Acting on a Web Frame at Node *i*

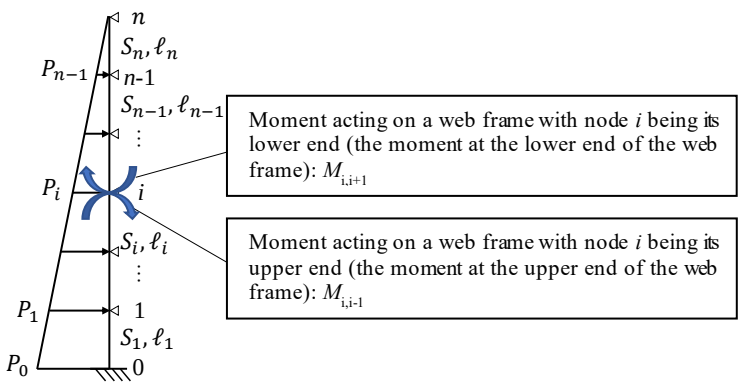

7.2.8.3 Web Frames Supporting Cantilever Beams

The scantlings of web frames are to be in accordance with the requirements in 7.2.3 to 7.2.5. The bending moments and shear forces to be considered in applying 7.2.3 to 7.2.5 are to be in accordance with the following **(1)** or **(2)** as applicable depending on the number of decks:

(1) Web frames in double-deck ships (*See* Fig. 7.2.8-3)

(a) Web frame in the first tier from the inner bottom plating:

i) Moment

$$0.6|m_1|$$

ii) Shear force

$$0.3\left|\frac{m_1}{\ell_1}\right|$$

(b) Web frame in the second tier:

i) Moment

$$\max(|0.25m_2 + 0.5m_1|, |m_2|)$$

ii) Shear force

$$\left|\frac{0.5m_1 - 0.75m_2}{\ell_2}\right|$$

(2) Web frames in multi-deck ships with three or more decks:

i) Moment

$$|m_i|$$

ii) Shear force

$$\frac{3|m_i|}{2\ell_i}$$

m_i: Moment due to the deck load acting on the web frames at the *i*-th tier deck to be taken as follows:

$$m_i = M_{di} + M_{hi}$$

M_{di}: Moment (*kN-m*) due to the cargo loaded on the *i*-th tier deck or wave loads to be obtained from Assessment Model A shown in Table 7.2.9-1. However, ℓ is to be used for calculation instead of ℓ_{bdg}.

M_{hi}: Moment (*kN-m*) due to the cargo loaded on the *i*-th tier hatch cover or wave loads to be obtained from Assessment Model B shown in Table 7.2.9-1. However, ℓ is to be used for calculation instead of ℓ_{bdg}.

ℓ_i: Horizontal distance (*m*) from the inboard end of the supported deck transverse to the inner surface of the web frame

Fig. 7.2.8-3 Web Frames in a Double-Deck Ship

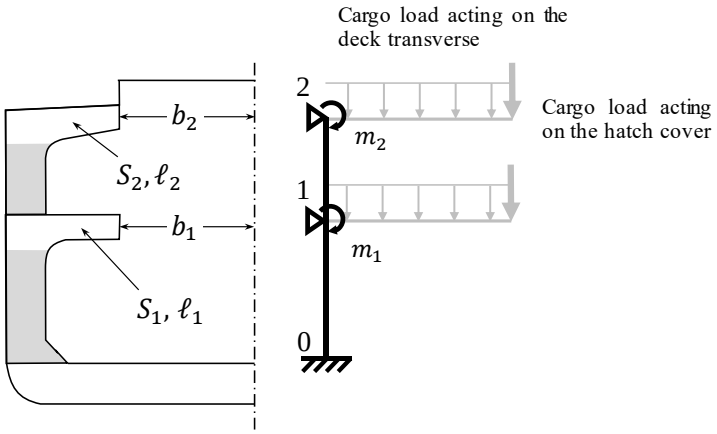

7.2.9 Cantilever Beam Systems

7.2.9.1 Cantilever Beams

Cantilever beams are to comply with the requirements in the following **(1)** to **(5)**:

(1) The depth of the cantilever beams measured at the toe of the end brackets is to be not less than $1/5$ of the horizontal distance from the inboard end of the cantilever beam to the toe of the end bracket.

(2) The depth of the cantilever beams may be gradually tapered down towards their inboard end from the toe of the end brackets where it may be reduced to about $1/2$ of the depth at the toe of the end bracket.

(3) The section modulus at the end of the cantilever beams is to be in accordance with the requirements in **7.2.3**. The bending moment to be considered in applying **7.2.3** is to be not less than that obtained from the following formula:

$M = M_d + M_h$

M_d: Moment (*kN-m*) due to deck cargo or wave loads to be obtained from Assessment Model A shown in **Table 7.2.9-1**.

M_h: Moment (*kN-m*) due to the cargo loaded on the hatch cover or wave loads to be obtained from Assessment Model B shown in **Table 7.2.9-1**.

(4) The sectional area of face plates may be gradually tapered down from the toe of the end brackets toward the inboard end of the cantilever beams where it may be reduced to 0.60 times that at the toe of the end bracket.

(5) The web thickness of the cantilever beams at any point is to be in accordance with the requirements in **7.2.4**. The shear force to be considered in applying **7.2.4** is to be not less than that obtained from the following formula:

$F = F_d + F_h$

F_d: Shear force (*kN*) due to deck cargo or wave loads to be obtained from Assessment Model A shown in **Table 7.2.9-1**.

F_h: Moment (*kN*) due to the cargo loaded on the hatch cover or wave loads to be obtained from Assessment Model B shown in **Table 7.2.9-1**.

Table 7.2.9-1 Moments and Shear Forces

	Assessment model	M	F
A	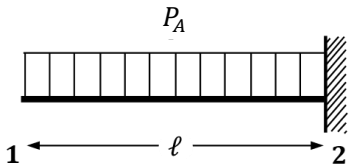	$M_2 = \frac{SP_A\ell_{bdg}{}^2}{2}$	$F_2 = SP_A\ell_{shr}$
B	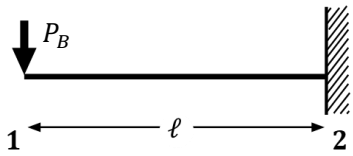	$M_2 = P_B\ell_{bdg}$	$F_2 = P_B$

S: Spacing of cantilever beam (m)

ℓ: Full length (m) of the cantilever beam

ℓ_{bdg}: Effective bending span (m) of the cantilever beam as given in **3.6.1.4**

ℓ_{shr}: Effective shear span (m) of the cantilever beam as given in **3.6.1.5**

P_A: Average lateral load (kN/m^2) acting on the deck to be taken as the greater of the cargo load or green sea load in the maximum load condition specified in **4.4.2.2**. These loads are to be calculated at the midpoint of the span ℓ.

P_B: Load (kN) due to the cargo loaded on the hatch cover to be taken as follows:

$P_B = SBP_h$

B: A half of the breadth (m) of the hatch in the deck supported by deck transverses

P_h: Load (kN/m^2) acting on the hatch cover as specified in **4.4.2.7** or **4.10.2.1**

7.3 Double Hull Structures

7.3.1 General

7.3.1.1 Application

1 7.3 is to apply to double hull structures, including double bottom and double side.

2 7.3 assumes application to ships with not more than two rows of cargo holds. Application to ships with three or more rows of cargo holds is deemed appropriate by the Society.

3 The society may require the direct strength method, such as FE analysis, after consideration by the Society on a case-by-case basis.

7.3.1.2 Double Hull Models

Double hull strength assessments are to be carried out using an appropriate double hull model selected from **Table 7.3.1-2** according to the presence or absence of double side skin structures and hopper tanks, the size of hatchways and the presence or absence of longitudinal bulkheads on the centreline.

7.3.1.3 Assessment Conditions

The plates and girders of double hull specified in 7.3 are to be assessed in the maximum load condition and harbour condition. The assessment of harbour condition may be waived when the difference between the internal pressure and the external pressure of a double bottom structure or a double side skin structure is negligibly small in the harbour.

7.3.1.4 Loading Conditions

The loading conditions to be considered in double hull strength assessments are to be in accordance with the requirements for loads to be considered for the strength of primary supporting structures specified in **Chapter 4, Part 2** (Requirements by ship type). The loading condition of which $P_{DH} = 0$ may be waived.

7.3.1.5 Idealisation of Loads

1 The pressures at the load calculation points (*LCP*) shown in **Table 7.3.1-1** are to be used according to the type of members.

Table 7.3.1-1 Load Calculation Points

LCP coordinate	Bottom shell	Inner bottom plating	Side shell	Longitudinal bulkhead
x coordinate	$x_{DH} = 0$	$x_{DH} = 0$	$x_{DH} = 0$	$x_{DH} = 0$
y coordinate	$y_{DH} = 0$	$y_{DH} = 0$	Portside: $y_{DH} = 0.5B_{DB} + D_{DS}$ Starboard side: $y_{DH} = -0.5B_{DB} - D_{DS}$	Portside: $y = 0.5B_{DB}$ Starboard side: $y = -0.5B_{DB}$
z coordinate	$z = 0$	$z = D_{DB}$	$z_{DH} = -0.5B_{DS}$	$z_{DH} = -0.5B_{DS}$
(Notes) Either of the load calculation point of port or starboard side of the longitudinal bulkhead may be used for the assessment of double bottom.				

2 P_{DB} is assumed to be uniformly distributed over the double bottom. In double side, P_{DS} is assumed to be triangularly distributed from the load calculation point up to the upper edge of the double side. However, where the ship's side structure changes from a double to a single side in the middle of its height, P_{DS} is assumed to be triangularly distributed up to the upper end of the double side. (*See* **Fig. 7.3.1-1**)

7.3.1.6 Idealisation of Structures

1 ℓ_{DB} is to be taken as the distance between the watertight transverse bulkheads in the cargo hold under assessment. However, where transverse watertight bulkheads are provided with lower stools, ℓ_{DB} is to be taken as the distance between the lower stools. (*See* **Fig. 7.3.1-2**)

2 B_{DB} is to be taken as the distance between the connections of the inner bottom plating and longitudinal bulkheads at $x_{DB} = 0$. However, where the cargo hold is provided with bilge hoppers or steps, B_{DB} is to be taken as the distance between the bilge hoppers or steps. (*See* **Fig. 7.3.1-3**)

3 ℓ_{DS} is to be taken as the distance between the watertight transverse bulkheads in the cargo hold under assessment. (*See* **Fig. 7.3.1-2**)

4 B_{DS} is to be taken as the distance from the inner bottom plating to the upper deck at $x_{DB} = 0$. However, where the cargo hold is provided with bilge hoppers or steps, B_{DS} is to be taken as the distance from the upper end of the bilge hoppers or steps to the upper deck. Where the ship's side structure changes from a double to a single in the middle of its height, B_{DS} is to be taken as the distance up to the upper end of the double side. (*See* **Fig. 7.3.1-4**)

5 For structures that fall outside the requirements in **-1** to **-4** above, the structures are deemed appropriate by the Society.

Table 7.3.1-2 Classification of Double Hull Models

Type of structure	Side structure	Other features	Typical transverse sectional view	Boundary condition at the left and right of the double bottom	Boundary condition at the upper end of the double side
S1	Single side skin structure	No bilge hopper tanks provided	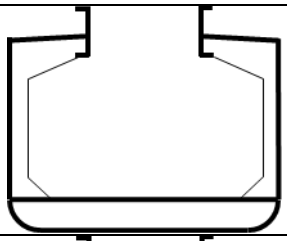	Supported	
S2	Single side skin structure	Bilge hopper tanks provided	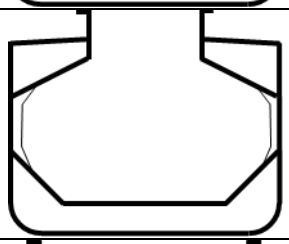	Rotational spring support	
D1	Double side skin structure	Hatchway greater than $0.7B$ in breadth	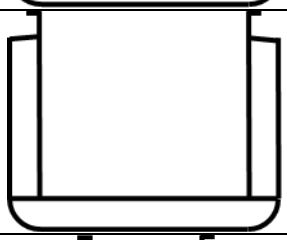	Rotational spring support	Upper end: Free
D2	Double side skin structure	Hatchway $0.7B$ and under in breadth	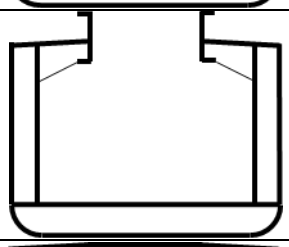	Rotational spring support	Upper end: Supported
D3	Double side skin structure	No hatchway provided	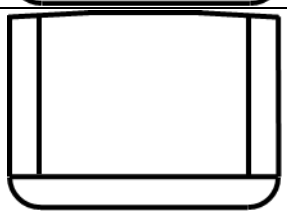	Rotational spring support	Upper end: Fixed
D4	Double side skin structure	No hatchway provided C.L. BHD provided	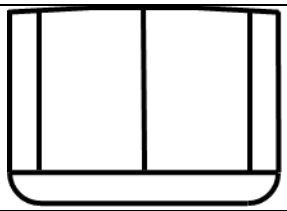	Left and right ends: Rotational spring support C.L.: Supported or fixed	Upper end: Fixed

Fig. 7.3.1-1 Idealisation of Loads

Cross section of the middle of the cargo hold

External pressure distribution given in 4.6.2

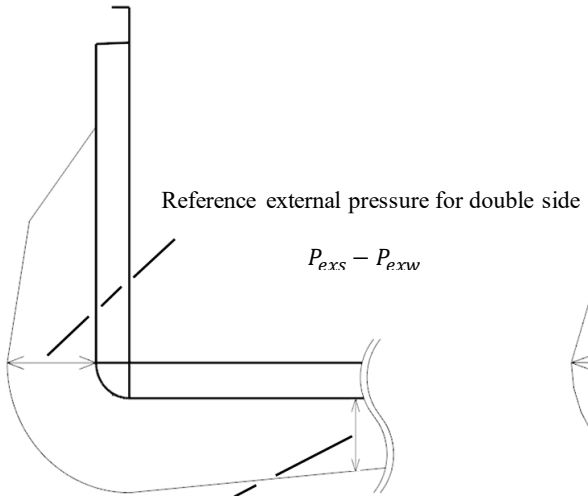

External pressure distribution used for 7.3

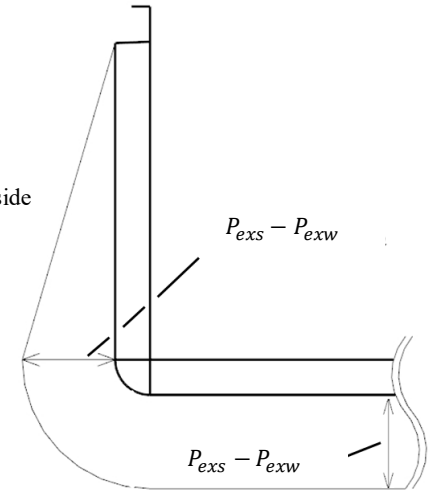

Uniform distribution of reference external pressure

Cross section of the middle of the cargo hold

Internal pressure distribution given in 4.6.2

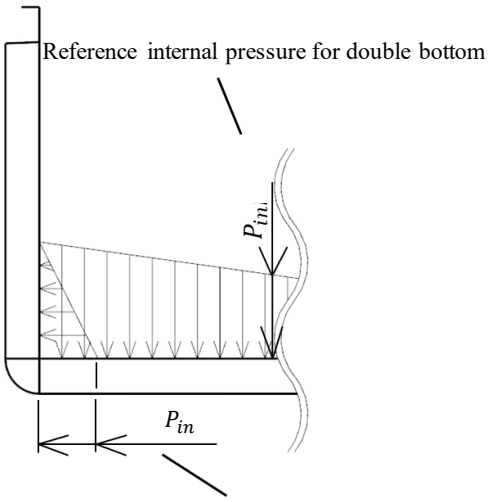

Reference internal pressure for double side

Internal pressure distribution used for 7.3

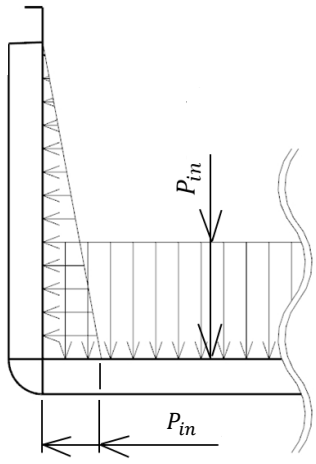

Uniform distribution of reference internal pressure

Fig. 7.3.1-2 Length of Double Bottom

a) With stools

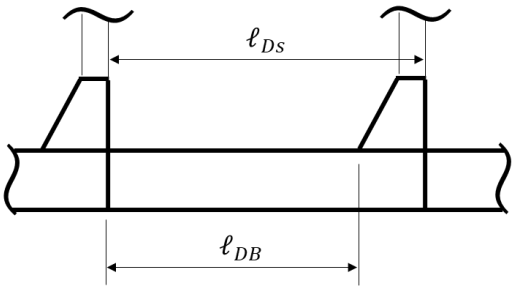

b) Without stools

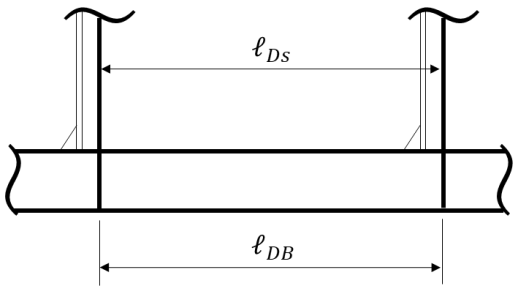

Fig. 7.3.1-3 Breadth of Double Bottom

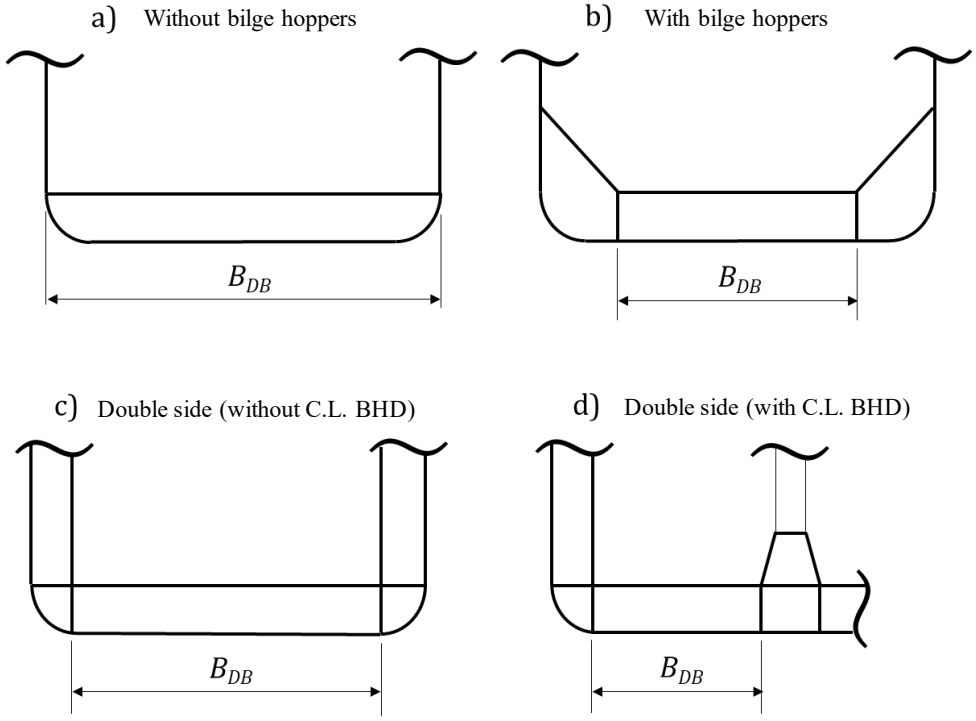

Fig. 7.3.1-4 Breadth of Double Side

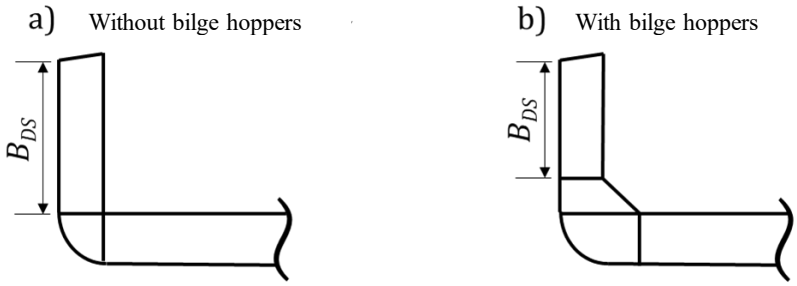

7.3.2 Requirements for Scantlings

7.3.2.1 Bending Strength

In each assessment condition, the thickness of plating of double hull is to be in accordance with the following requirements **(1)** and **(2)**. The thickness of plating according to these requirements is to be uniform at any point in the double hull under assessment.

(1) The thickness of bottom shell plating and inner bottom plating constituting a double bottom and that of side shell plating and side longitudinal bulkheads constituting a double side are to be not less than that obtained from the following formula:

$$t_{n50} = \frac{C_{Safety}}{C_{cnd}} \frac{(1-\nu^2)}{D_{DH}} \times max\left(\frac{|M_X|}{\gamma_{stf-x} C_{bi-x}(\sigma_{all} - \sigma_{BM})}, \frac{|M_Y|}{\gamma_{stf-y} C_{bi-y} \sigma_{all}}\right) \ (mm)$$

C_{Safety}: Safety factor to be taken as 1.2

γ_{stf-x}: Coefficient of the bending stiffness effect of stiffeners in the longitudinal direction, as given in **Table 7.3.2-1**

γ_{stf-y}: Coefficient of the bending stiffness effect of stiffeners in the transverse direction, as given in **Table 7.3.2-1**

C_{bi-x}: Coefficient of strength decrease due to bending in the longitudinal direction, as given in **Table 7.3.2-1**

C_{bi-y}: Coefficient of strength decrease due to bending in the transverse direction, as given in **Table 7.3.2-1**

M_X: Longitudinal bending moment (*kN-m/m*) per unit width in double hull as given in **7.3.3.1** (*See* **Fig. 7.3.2-1**).

M_Y: Transverse bending moment (*kN-m/m*) per unit length in the double hull as given in **7.3.3.1**. When assessing double bottoms, read M_Y. When assessing double sides, M_Y is to be read as M_Z (*See* **Fig. 7.3.2-1**).

σ_{BM}: Stress (N/mm^2) due to hull girder bending at the member under assessment to be taken as follows:

$$\sigma_{BM} = \left[\left|\frac{M_{V-HG}}{I_{y-n50}}(z - z_n)\right| + \left|\frac{M_{H-HG}}{I_{Z-n50}}y\right|\right] \times 10^5$$

M_{V-HG}: Vertical bending moment (kN-m) corresponding to each assessment condition as given in **4.6.2.10** for the maximum load condition and **4.6.3.5** for the harbour condition.

M_{H-HG}: Horizontal bending moment (kN-m) corresponding to each assessment condition as given in **4.6.2.10** for the maximum load condition and **4.6.3.5** for the harbour condition.

I_{y-n50}: Moment of inertia (cm^4) of the transverse section at the midpoint of ℓ_{DB} about its horizontal neutral axis (net scantlings). The corrosion addition is given in **3.3.4**.

I_{z-n50}: Moment of inertia (cm^4) of the transverse section at the midpoint of ℓ_{DS} about its vertical neutral axis (net scantlings). The corrosion addition is given in **3.3.4**.

z: Position (m) of the double hull on the Z coordinate, which is defined as follows:

For bottom shell plating, this position is to be taken as the lowest point of the bottom shell plating of the double bottom under consideration at $x_{DB} = 0$.

For inner bottom plating, this position is to be taken as the lowest point of the inner bottom plating of the double bottom under consideration at $x_{DB} = 0$.

For side shell plating, this position is to be taken as either of the upper and lower ends of the side shell plating of the double side under consideration at $x_{DS} = 0$, whichever is greater in distance from z_n.

For longitudinal bulkhead, this position is to be taken as either of the upper and lower ends of the longitudinal bulkhead of the double side under consideration at $x_{DS} = 0$, whichever is greater in distance from z_n.

y: Position (m) of the double hull on the Y coordinate, which is defined as follows:

For bottom shell plating, this position is to be taken as the outermost point of the bottom shell plating of the double bottom under consideration at $x_{DB} = 0$.

For inner bottom plating, this position is to be taken as the outermost point of the inner bottom plating of the double bottom under consideration at $x_{DB} = 0$.

For side shell plating, this position is to be taken as the point most distant from the centreline of the side shell plating of the double side under consideration at $x_{DS} = 0$.

For longitudinal bulkhead, this position is to be taken as the point most distant from the centreline of the longitudinal bulkhead of the double side under consideration at $x_{DS} = 0$.

(2) Notwithstanding **(1)** above, where any of the requirements specified in **2.4.1.2-6(1)** and **2.4.1.3-1(1)** for the spacing of girders and floors in double bottom is not satisfied, the thickness of the bottom shell plating and inner bottom plating constituting a double bottom is to be not less than that obtained from the following formula. Similarly, if any of the requirements specified in **2.4.2.1(1)** and **2.4.2.2(1)** for the spacing of side transverses and side stringers is not satisfied, the thickness of the side shell plating and longitudinal bulkheads constituting a double side is to be not less than that obtained from the following formula. However, $C_{EX} = 1.0$ where no longitudinal girders are provided, while $C_{EY} = 1.0$ where no transverse girders are provided.

$$t_{n50} = \frac{C_{Safety}}{C_{cnd}}\frac{(1-\nu^2)}{D_{DH}} \times \max\left(\frac{1}{\min(C_{bi-x}, C_{EX})} \cdot \frac{|M_X|}{\gamma_{stf-x}(\sigma_{all} - \sigma_{BM})}, \quad \frac{1}{\min(C_{bi-y}, C_{EY})} \cdot \frac{|M_Y|}{\gamma_{stf-y}\sigma_{all}}\right) \text{ (mm)}$$

C_{Safety}: Safety factor to be taken as 1.2

γ_{stf-x}, γ_{stf-y}, C_{bi-x}, C_{bi-y}, M_X, M_Y and σ_{BM}: As specified in **(1)** above

Table 7.3.2-1 Bending Strength Parameters for Double Hull

	Longitudinal framing system	Transverse framing system
C_{bi-x}	1.0	0.5
C_{bi-y}	0.5	1.0
γ_{stf-x}	1.1	1.0
γ_{stf-y}	1.0	1.1

Fig. 7.3.2-1 Bending moment of double hull

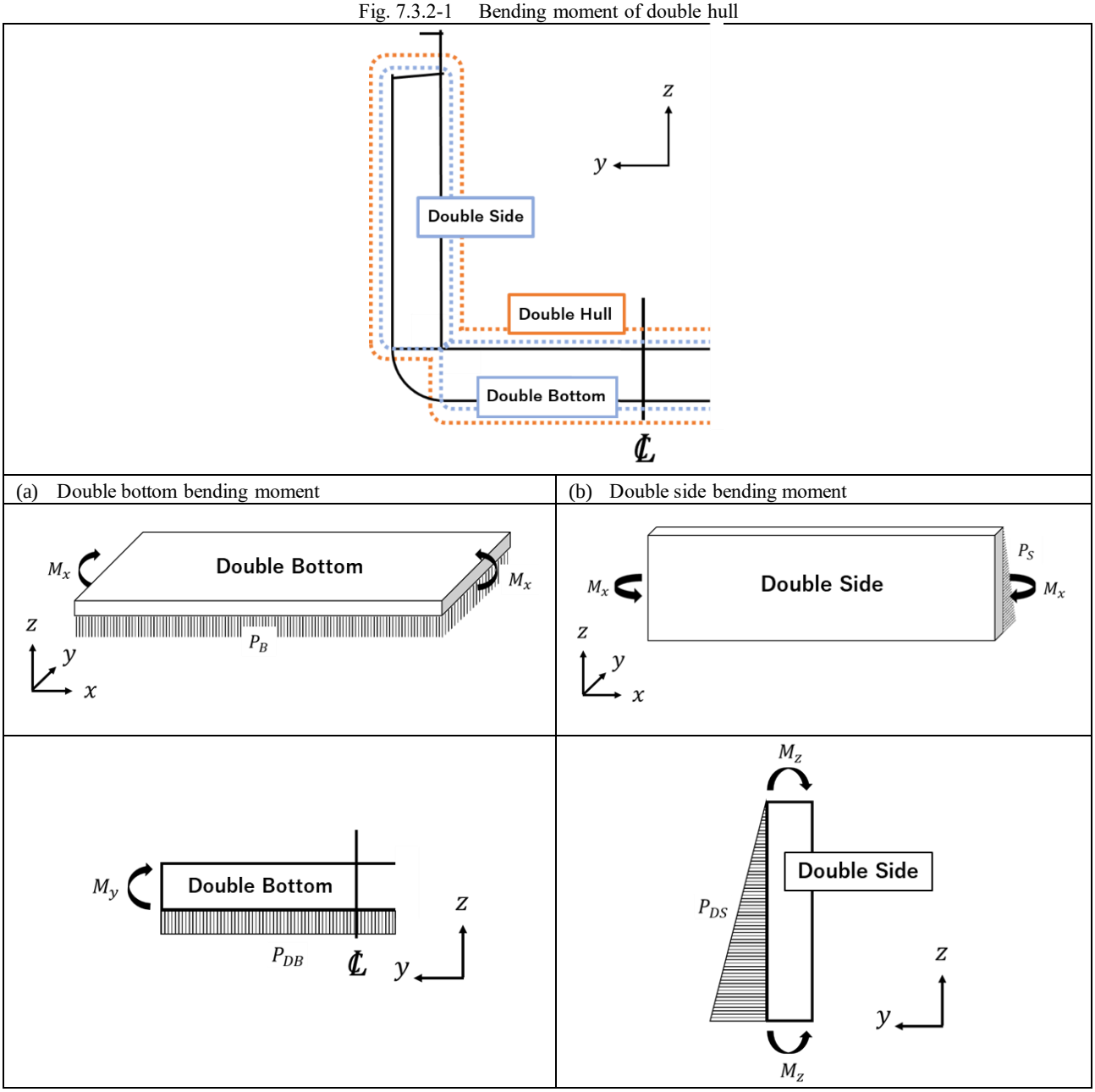

7.3.2.2 Shear Strength

In each assessment condition, the web thickness of girder members in double hull is to be not less than that obtained from the following formula:

$$t_{n50} = \frac{C_{Safety}}{C_{cnd}} \frac{|F|}{D_{sh}\tau_{all}} \ (mm)$$

C_{Safety}: Safety factor to be taken as 1.2

F: Shear force (kN) of the girder in double hull under assessment as given in 7.3.3.2

7.3.2.3 Shear Buckling Strength

In each assessment condition, the web thickness of girder members in double hull is to be not less than that obtained from the following formulae **(1)** to **(3)**:

(1) For girder webs with no opening

$$t = \sqrt[3]{C_{safety} \frac{|F|b^2}{C_{cnd}D_w} \frac{12(1-\nu^2)}{K_\tau \pi^2 E}} \ (mm)$$

C_{Safety}: Safety factor to be taken as 1.2

F: Shear force (kN) of the girder in double hull under assessment as given in 7.3.3.2

(2) For girder webs with an opening reinforced by stiffeners in the girder span direction

$$t = \sqrt[3]{C_{safety}\frac{|F|b^2}{C_{cnd}(D_w - D_0)}\frac{12(1-\nu^2)}{K_\tau \pi^2 E}}\ (mm)$$

F: Shear force (kN) of the girder in double hull under assessment as given in 7.3.3.2

(3) For girder webs with an opening (an unreinforced opening)

$$t = \sqrt[3]{C_{safety}\frac{|F|b^2}{C_{cnd}D_w}\frac{12(1-\nu^2)}{\gamma_{a_0}K_\tau \pi^2 E}}\ (mm)$$

C_{Safety}: Safety factor to be taken as 1.2

F: Shear force (kN) of the girder in double hull under assessment as given in 7.3.3.2

γ_{a_0}: Coefficient of the effect of an opening, such as a manhole, on shear buckling to be taken as follows:

$$\gamma_{a_0} = \left(1 + \frac{D_0}{2a} \times 10^3\right)^{-2}$$

7.3.3 Moments and Shear forces

7.3.3.1 Moments

(1) The longitudinal bending moment M_X (kN-m/m) per unit width in the double hull structure is to be obtained from the following formula:

$$M_X = C_{MX}P_{DH}\,B_{DH}{}^2 (kN\text{-}m/m)$$

C_{MX}:Maximum longitudinal bending moment coefficient to be taken as follows depending on the structural arrangement:

(a) Double bottom of single side skin structure with no bilge hoppers (S1 Type)

$$C_{MX} = \max(C_{MXS1}, C_{MXS2})$$

C_{MXS1} and C_{MXS2}: Coefficients obtained according to the value of α_{EQ} from Table 7.3.3-4. For intermediate values of α_{EQ}, these coefficients are to be determined by interpolation.

(b) Double bottom of single side skin structure with bilge hoppers (S2 Type)

$$C_{MX} = \frac{1}{k + C_{BH}}\max(kC_{MXS1} + C_{BH}C_{MXF1}, kC_{MXS2} + C_{BH}C_{MXF2})$$

C_{MXS1}, C_{MXS2}, C_{MXF1} and C_{MXF2}: Coefficients obtained according to the value of α_{EQ} from Tables 7.3.3-4 and 7.3.3-5. For intermediate values of α_{EQ}, these coefficients are to be determined by interpolation.

k: Elastic support effect coefficient due to the torsional stiffness of the bilge hopper to be taken as follows:

$$k = 2.1\frac{\Lambda_{BH}\,\ell_{DB}}{B_{BH}{}^2\left(1 + \frac{D_2}{D_1}\right)^2}$$

Λ_{BH}: Total girth length (m) of the sloped plating, side girder and outer shell constituting the bilge hopper (*See* Fig. 7.3.3-2)

B_{BH}:Breadth (m) of the bilge hopper (*See* Fig. 7.3.3-2)

D_1: Height (m) from the bottom shell to the inner bottom plating (*See* Fig. 7.3.3-2)

D_2: Height (m) from the bottom shell to the upper end of the bilge hopper (*See* Fig. 7.3.3-2)

C_{BH}:Coefficient of the torsional stiffness effect of the bilge hopper as given in Table 7.3.3-1

(c) Double bottom of double side skin structure (D1, D2 and D3 Types)

$$C_{MX} = \max\left(C_{MXS1} + \beta_B(C_{MXF1} - C_{MXS1}), C_{MXS2} + \beta_B(C_{MXF2} - C_{MXS2})\right)$$

C_{MXS1}, C_{MXS2}, C_{MXF1}, and C_{MXF2}: Coefficients obtained according to the value of α_{EQ} from Tables 7.3.3-4 and 7.3.3-5, depending on the structural model. For intermediate values of α_{EQ}, these coefficients are to be determined by interpolation.

(d) Double bottom of double side skin structure (D4 Type)

$$C_{MX} = \max\left(C_{MXS1} + \beta_B(C_{MXF1} - C_{MXS1}), C_{MXS2} + \beta_B(C_{MXF2} - C_{MXS2})\right)$$

C_{MXS1}, C_{MXS2}, C_{MXF1} and C_{MXF2}: Coefficients obtained according to the value of α_{EQ} from Tables 7.3.3-6 and 7.3.3-7, depending on the structural model. For intermediate values of α_{EQ}, these coefficients are to be determined by interpolation.

(e) Double side (D1, D2, D3 and D4 Types)

$$C_{MX} = \max\left(C_{MXS1} + \beta_S(C_{MXF1} - C_{MXS1}), C_{MXS2} + \beta_S(C_{MXF2} - C_{MXS2})\right)$$

C_{MXS1}, C_{MXS2}, C_{MXF1} and C_{MXF2}: Coefficients obtained according to the α_{EQ} from **Tables 7.3.3-8** to **7.3.3-13**, depending on the structural model. For intermediate values of α_{EQ}, these coefficients are to be determined by interpolation.

(2) The transverse or vertical bending moment per unit length in the double hull is to be obtained from the following formula:

$M_Y = C_{MY} P_{DH} B_{DH}{}^2$ (kNm/m)

C_{MY}:Maximum transverse bending moment coefficient to be taken as follows depending on the structural arrangement: When assessing double bottom, read C_{MY}. When assessing double side, C_{MY} is to be read as C_{MZ}

(a) Double bottom of single side skin structure, with no bilge hoppers (S1 Type)

$C_{MY} = \max(C_{MYS1}, C_{MYS2})$

C_{MYS1} and C_{MYS2}: Coefficients obtained according to the value of α_{EQ} from **Table 7.3.3-4**. For intermediate values of α_{EQ}, these coefficients are to be determined by interpolation.

(b) Double bottom of single side skin structure with bilge hoppers (S2 Type)

$$C_{MY} = \frac{1}{k + C_{BH}} \max(kC_{MYS1} + C_{BH}C_{MYF1}, kC_{MYS2} + C_{BH}C_{MYF2})$$

C_{MYS1}, C_{MYS2}, C_{MYF1} and C_{MYF2}: Coefficients obtained according to the value of α_{EQ} from **Tables 7.3.3-4** and **7.3.3-5**. For intermediate values of α_{EQ}, these coefficients are to be determined by interpolation.

k: As specified in **7.3.3.1(1)(b)**

(c) Double bottom of double side skin structure (D1, D2 and D3 Types)

$$C_{MY} = \max\left(C_{MYS1} + \beta_B(C_{MYF1} - C_{MYS1}), C_{MYS2} + \beta_B(C_{MYF2} - C_{MYS2})\right)$$

C_{MYS1}, C_{MYS2}, C_{MYF1} and C_{MYF2}: Coefficients obtained according to the value of α_{EQ} from **Tables 7.3.3-4** and **7.3.3-5**. For intermediate values of α_{EQ}, these coefficients are to be determined by interpolation.

(d) Double bottom of double side skin structure (D4 Type)

$$C_{MY} = \max\left(C_{MYS1} + \beta_B(C_{MYF1} - C_{MYS1}), C_{MYS2} + \beta_B(C_{MYF2} - C_{MYS2}), C_{MYS3} + \beta_B(C_{MYF3} - C_{MYS3})\right)$$

C_{MYS1}, C_{MYS2}, C_{MYS1}, and C_{MYS2}: Coefficients obtained according to the value of α_{EQ} from **Tables 7.3.3-6** and **7.3.3-7**, depending on the structural model. For intermediate values of α_{EQ}, these coefficients are to be determined by interpolation.

(e) Double side (D1, D2, D3 and D4 Types)

$$C_{MZ} = \max\left(C_{MZS1} + \beta_S(C_{MZF1} - C_{MZS1}), C_{MZS2} + \beta_S(C_{MZF2} - C_{MZS2})\right)$$

C_{MZS1}, C_{MZS2}, C_{MZF1} and C_{MZF2}: Coefficients obtained according to the value of α_{EQ} from **Tables 7.3.3-8** to **7.3.3-13**, depending on the structural model. For intermediate values of α_{EQ}, these coefficients are to be determined by interpolation.

Fig. 7.3.3-1 Effective Breadth Ratio

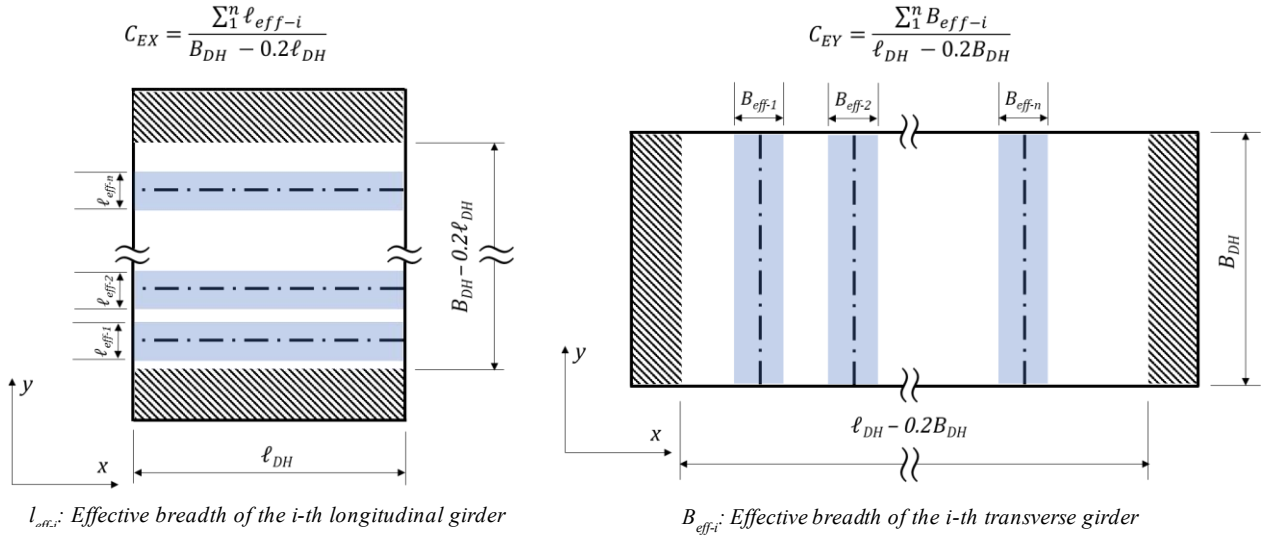

l_{eff-i}: *Effective breadth of the i-th longitudinal girder*

B_{eff-i}: *Effective breadth of the i-th transverse girder*

Fig. 7.3.3-2 Effective Breadth Ratio

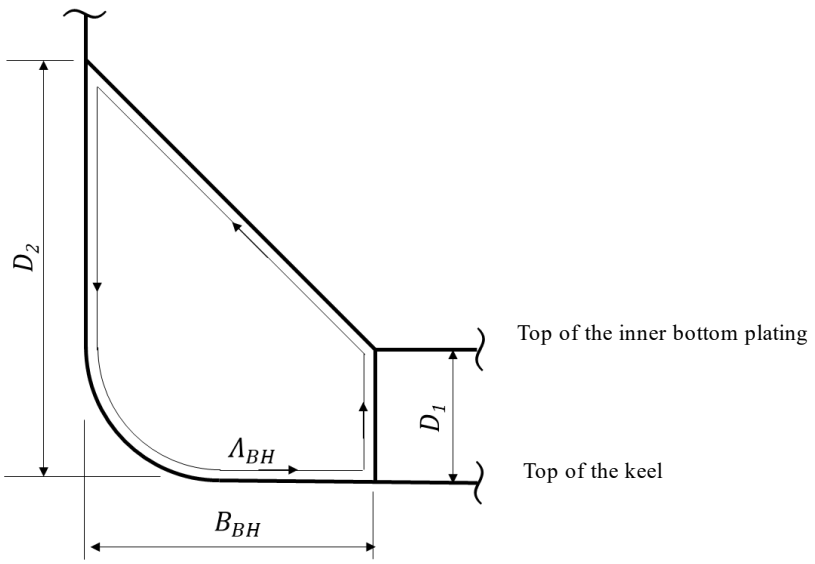

Table 7.3.3-1 Coefficient of the Torsional Stiffness Effect of the Bilge Hopper C_{BH}

α_{EQ}	≤ 0.7	0.8	0.9	1.0	1.2	1.6	2.0	2.5	4.0 ≤
C_{BH}	1.57	1.56	1.55	1.54	1.50	1.38	1.25	1.09	0.76

Table 7.3.3-2 Moment Correction Factor β_B for Double Bottom

Type of structure	β_B
D1	$\frac{28P_{DS}D_{DB}B_{DS}^3 + 15P_{DB}D_{DS}B_{DB}^3}{240D_{DB}B_{DS} + 180D_{DS}B_{DB}} \times \frac{12}{P_{DB}\,{B_{DB}}^2}$
D2	$\frac{8P_{DS}D_{DB}{B_{DS}}^3 + 15P_{DB}D_{DS}{B_{DB}}^3}{120D_{DB}B_{DS} + 180D_{DS}B_{DB}} \times \frac{12}{P_{DB}\,{B_{DB}}^2}$
D3	$\frac{3P_{DS}D_{DB}{B_{DS}}^3 + 10P_{DB}D_{DS}{B_{DB}}^3}{60D_{DB}B_{DS} + 120D_{DS}B_{DB}} \times \frac{12}{P_{DB}\,{B_{DB}}^2}$
D4	$\frac{3P_{DS}D_{DB}{B_{DS}}^3 + 5P_{DB}D_{DS}B_{DB}^3}{60D_{DB}B_{DS} + 60D_{DS}B_{DB}} \times \frac{12}{P_{DB}\,{B_{DB}}^2}$

Table 7.3.3-3 Moment Correction Factor β_S for Double Side

Type of structure	β_B
D1	$\frac{28P_{DS}D_{DB}B_{DS}^3 + 15P_{DB}D_{DS}B_{DB}^3}{240D_{DB}B_{DS} + 180D_{DS}B_{DB}} \times \frac{60}{7P_{DS}B_{DS}^2}$
D2	$\frac{8P_{DS}D_{DB}{B_{DS}}^3 + 15P_{DB}D_{DS}{B_{DB}}^3}{120D_{DB}B_{DS} + 180D_{DS}B_{DB}} \times \frac{15}{P_{DS}{B_{DS}}^2}$
D3	$\frac{3P_{DS}D_{DB}{B_{DS}}^3 + 10P_{DB}D_{DS}{B_{DB}}^3}{60D_{DB}B_{DS} + 120D_{DS}B_{DB}} \times \frac{20}{P_{DS}{B_{DS}}^2}$
D4	$\frac{3P_{DS}D_{DB}{B_{DS}}^3 + 5P_{DB}D_{DS}{B_{DB}}^3}{60D_{DB}B_{DS} + 60D_{DS}B_{DB}} \times \frac{20}{P_{DS}{B_{DS}}^2}$

Table 7.3.3-4 Coefficients C_{MXS1}, C_{MXS2}, C_{MYS1} and C_{MYS2} at Double Bottom (Other than D4) Where Boundary Condition with Side Structure Is "Supported"

α_{EQ}	≤ 0.25	0.4	0.5	0.6	0.7	0.8	0.9
C_{MXS1}	0.008	0.018	0.025	0.032	0.038	0.042	0.046
C_{MXS2}	0.005	0.013	0.021	0.030	0.040	0.050	0.060
C_{MYS1}	0.002	0.007	0.012	0.018	0.025	0.032	0.040
C_{MYS2}	0.000	0.000	0.000	0.000	0.000	0.000	0.000
α_{EQ}	1.0	1.2	1.6	2.0	2.5	4.0 ≤	
C_{MXS1}	0.048	0.050	0.049	0.047	0.044	0.039	
C_{MXS2}	0.070	0.087	0.109	0.119	0.123	0.125	
C_{MYS1}	0.048	0.063	0.086	0.102	0.113	0.123	
C_{MYS2}	0.000	0.000	0.000	0.000	0.000	0.000	

Table 7.3.3-5 Coefficients C_{MXF1}, C_{MXF2}, C_{MYF1} and C_{MYF2} at Double Bottom (Other than D4) Where Boundary Condition with Side Structure Is "Fixed"

α_{EQ}	≤ 0.25	0.4	0.5	0.6	0.7	0.8	0.9
C_{MXF1}	0.008	0.017	0.022	0.025	0.026	0.026	0.026
C_{MXF2}	0.005	0.013	0.021	0.029	0.036	0.043	0.048
C_{MYF1}	0.002	0.007	0.012	0.017	0.022	0.027	0.030
C_{MYF2}	0.008	0.020	0.030	0.040	0.050	0.058	0.065
α_{EQ}	1.0	1.2	1.6	2.0	2.5	4.0 ≤	
C_{MXF1}	0.024	0.023	0.019	0.016	0.014	0.012	
C_{MXF2}	0.051	0.055	0.057	0.057	0.057	0.056	
C_{MYF1}	0.033	0.037	0.041	0.042	0.043	0.042	
C_{MYF2}	0.070	0.077	0.083	0.084	0.084	0.084	

Table 7.3.3-6 Coefficients C_{MXS1}, C_{MXS2}, C_{MYS1}, C_{MYS2} and C_{MYS3} at Double Bottom (D4) Where Boundary Condition with Side Structure Is "Supported"

α_{EQ}	≤ 0.25	0.4	0.5	0.6	0.7	0.8	0.9
C_{MXS1}	0.008	0.018	0.025	0.032	0.038	0.042	0.046
C_{MXS2}	0.005	0.014	0.021	0.030	0.040	0.050	0.060
C_{MYS1}	0.002	0.007	0.012	0.018	0.025	0.032	0.040
C_{MYS2}	0.000	0.000	0.000	0.000	0.000	0.000	0.000
C_{MYS3}	0.007	0.020	0.030	0.042	0.054	0.065	0.075
α_{EQ}	1.0	1.2	1.6	2.0	2.5	4.0 ≤	
C_{MXS1}	0.048	0.050	0.049	0.048	0.045	0.040	
C_{MXS2}	0.070	0.087	0.109	0.119	0.123	0.123	
C_{MYS1}	0.048	0.063	0.086	0.102	0.113	0.124	
C_{MYS2}	0.000	0.000	0.000	0.000	0.000	0.000	
C_{MYS3}	0.084	0.098	0.114	0.121	0.125	0.126	

Table 7.3.3-7 Coefficients C_{MXF1}, C_{MXF2}, C_{MYF1}, C_{MYF2} and C_{MYF3} at Double Bottom (D4) Where Boundary Condition with Side Structure Is "Fixed"

α_{EQ}	≤ 0.25	0.4	0.5	0.6	0.7	0.8	0.9
C_{MXF1}	0.008	0.017	0.024	0.028	0.032	0.033	0.034
C_{MXF2}	0.005	0.014	0.021	0.029	0.038	0.046	0.054
C_{MYF1}	0.002	0.007	0.012	0.017	0.023	0.029	0.034
C_{MYF2}	0.008	0.020	0.030	0.042	0.054	0.065	0.075
C_{MYF3}	0.008	0.020	0.030	0.040	0.050	0.058	0.065
α_{EQ}	1.0	1.2	1.6	2.0	2.5	4.0 ≤	
C_{MXF1}	0.034	0.032	0.030	0.026	0.023	0.020	
C_{MXF2}	0.060	0.069	0.077	0.078	0.078	0.076	
C_{MYF1}	0.039	0.047	0.056	0.060	0.062	0.063	
C_{MYF2}	0.084	0.098	0.114	0.121	0.125	0.126	
C_{MYF3}	0.070	0.077	0.083	0.085	0.084	0.084	

Table 7.3.3-8 Coefficients C_{MXS1}, C_{MXS2}, C_{MZS1} and C_{MZS2} at Double Side (D1) Where Boundary Condition with Bottom Structure Is "Supported"

α_{EQ}	≤ 0.25	0.4	0.5	0.6	0.7	0.8	0.9
C_{MXS1}	0.007	0.018	0.026	0.035	0.043	0.051	0.059
C_{MXS2}	0.003	0.007	0.011	0.016	0.021	0.026	0.031
C_{MZS1}	0.002	0.007	0.011	0.016	0.022	0.029	0.036
C_{MZS2}	0.000	0.000	0.000	0.000	0.000	0.000	0.000
α_{EQ}	1.0	1.2	1.6	2.0	2.5	4.0 ≤	
C_{MXS1}	0.066	0.080	0.101	0.116	0.128	0.143	
C_{MXS2}	0.037	0.047	0.068	0.089	0.114	0.192	
C_{MZS1}	0.043	0.056	0.077	0.093	0.106	0.120	
C_{MZS2}	0.000	0.000	0.000	0.000	0.000	0.000	

Table 7.3.3-9 Coefficients C_{MXF1}, C_{MXF2}, C_{MZF1} and C_{MZF2} at Double Side (D1) Where Boundary Condition with Bottom Structure Is "Fixed"

α_{EQ}	≤ 0.25	0.4	0.5	0.6	0.7	0.8	0.9
C_{MXF1}	0.004	0.009	0.012	0.015	0.017	0.019	0.021
C_{MXF2}	0.003	0.007	0.011	0.015	0.019	0.023	0.026
C_{MZF1}	0.001	0.003	0.006	0.008	0.010	0.013	0.015
C_{MZF2}	0.006	0.014	0.020	0.027	0.034	0.042	0.049
α_{EQ}	1.0	1.2	1.6	2.0	2.5	4.0 ≤	
C_{MXF1}	0.022	0.022	0.020	0.018	0.015	0.002	
C_{MXF2}	0.030	0.035	0.043	0.048	0.051	0.053	
C_{MZF1}	0.016	0.017	0.017	0.016	0.010	0.014	
C_{MZF2}	0.057	0.071	0.097	0.118	0.137	0.160	

Table 7.3.3-10 Coefficients C_{MXS1}, C_{MXS2}, C_{MZS1} and C_{MZS2} at Double Side (D2) Where Boundary Condition with Bottom Structure Is "Supported"

α_{EQ}	≤ 0.25	0.4	0.5	0.6	0.7	0.8	0.9
C_{MXS1}	0.004	0.009	0.013	0.016	0.019	0.021	0.023
C_{MXS2}	0.003	0.007	0.011	0.015	0.020	0.025	0.030
C_{MZS1}	0.001	0.003	0.006	0.009	0.012	0.016	0.020
C_{MZS2}	0.000	0.000	0.000	0.000	0.000	0.000	0.000
α_{EQ}	1.0	1.2	1.6	2.0	2.5	4.0 ≤	
C_{MXS1}	0.024	0.025	0.025	0.024	0.022	0.020	
C_{MXS2}	0.035	0.043	0.055	0.060	0.062	0.062	
C_{MZS1}	0.024	0.031	0.043	0.051	0.057	0.062	
C_{MZS2}	0.000	0.000	0.000	0.000	0.000	0.000	

Table 7.3.3-11 Coefficients C_{MXF1}, C_{MXF2}, C_{MZF1} and C_{MZF2} at Double Side (D2) Where Boundary Condition with Bottom Structure Is "Fixed"

α_{EQ}	≤ 0.25	0.4	0.5	0.6	0.7	0.8	0.9
C_{MXF1}	0.004	0.009	0.011	0.014	0.015	0.016	0.016
C_{MXF2}	0.003	0.007	0.010	0.014	0.019	0.022	0.026
C_{MZF1}	0.001	0.003	0.006	0.009	0.011	0.014	0.017
C_{MZF2}	0.007	0.015	0.021	0.027	0.034	0.039	0.044
α_{EQ}	1.0	1.2	1.6	2.0	2.5	4.0 ≤	
C_{MXF1}	0.016	0.015	0.014	0.012	0.010	0.009	
C_{MXF2}	0.029	0.033	0.036	0.037	0.037	0.037	
C_{MZF1}	0.019	0.022	0.026	0.028	0.029	0.029	
C_{MZF2}	0.048	0.055	0.062	0.065	0.066	0.067	

Table 7.3.3-12 Coefficients C_{MXS1}, C_{MXS2}, C_{MZS1} and C_{MZS2} at Double Side (D3 or D4) Where Boundary Condition with Bottom Structure Is "Supported"

α_{EQ}	≤ 0.25	0.4	0.5	0.6	0.7	0.8	0.9
C_{MXS1}	0.004	0.009	0.012	0.015	0.017	0.018	0.018
C_{MXS2}	0.003	0.007	0.011	0.015	0.019	0.024	0.028
C_{MZS1}	0.001	0.003	0.006	0.009	0.012	0.015	0.018
C_{MZS2}	0.000	0.000	0.000	0.000	0.000	0.000	0.000
α_{EQ}	1.0	1.2	1.6	2.0	2.5	4.0 ≤	
C_{MXS1}	0.018	0.017	0.016	0.014	0.012	0.010	
C_{MXS2}	0.031	0.037	0.041	0.042	0.042	0.042	
C_{MZS1}	0.020	0.025	0.030	0.032	0.033	0.033	
C_{MZS2}	0.000	0.000	0.000	0.000	0.000	0.000	

Table 7.3.3-13 Coefficients C_{MXF1}, C_{MXF2}, C_{MZF1} and C_{MZF2} at Double Side (D3 or D4) Where Boundary Condition with Bottom Structure Is "Fixed"

α_{EQ}	≤ 0.25	0.4	0.5	0.6	0.7	0.8	0.9
C_{MXF1}	0.004	0.008	0.011	0.012	0.013	0.013	0.013
C_{MXF2}	0.003	0.007	0.010	0.014	0.018	0.021	0.024
C_{MZF1}	0.001	0.004	0.006	0.009	0.011	0.013	0.015
C_{MZF2}	0.007	0.015	0.021	0.027	0.032	0.037	0.040
α_{EQ}	1.0	1.2	1.6	2.0	2.5	4.0 ≤	
C_{MXF1}	0.012	0.011	0.010	0.008	0.007	0.006	
C_{MXF2}	0.026	0.028	0.029	0.029	0.029	0.029	
C_{MZF1}	0.017	0.019	0.021	0.021	0.022	0.021	
C_{MZF2}	0.043	0.047	0.050	0.050	0.050	0.050	

7.3.3.2 Shear Forces

(1) The shear force in bottom girders is to be given by the following formula:

$$F = C_{f(x_{DH})} C_{f(y_{DH})} C_{FX} P_{DH}\, SB_{DB}\ (kN)$$

$C_{f(x_{DH})}$: To be taken as follows depending on the value of x_{DH}:

(a) For $x_{DH} \le 0$

$$C_{f(x_{DH})} = \min\left(1.0 - 2.0\frac{\ell_{BKT-a}}{\ell_{DB}}, \max\left(0.35, -2.0\frac{x_{DH}}{\ell_{DB}}\right)\right)$$

ℓ_{BKT-a}: Length (m) of the connection between the double bottom and the bracket provided at the aft end thereof. To be taken as 0 where no bracket is provided.

(b) For $x_{DH} > 0$

$$C_{f(x_{DH})} = \min\left(1.0 - 2.0\frac{\ell_{BKT-f}}{\ell_{DB}}, \max\left(0.35, 2.0\frac{x_{DH}}{\ell_{DB}}\right)\right)$$

ℓ_{BKT-f}: Length (m) of the connection between the double bottom and the bracket provided at the fore end thereof. To be taken as 0 where no bracket is provided.

$C_{f(y_{DH})}$: To be taken as follows depending on the value of α_{EQ} for the double bottom:

(a) For $\alpha_{EQ} \le 0.25$

$$C_{f(y_{DH})} = 1.0$$

(b) For $\alpha_{EQ} > 0.25$

$$C_{f(y_{DH})} = \min\left(1.0, \max\left(0.5, C_{AS}\left(0.5 - \frac{|y_{DH}|}{B_{DB}}\right) + 0.5\right)\right)$$

$$C_{AS} = \min\left(4.0, \max\left(1.667, \frac{1.0}{0.467(\alpha_{EQ} - 0.25)} + 0.25\right)\right)$$

C_{FX}: Maximum shear force coefficient for bottom girders to be taken as follows:

(a) Single side skin structure with no bilge hoppers (S1 Type)

$C_{FX} = C_{FXS}$

C_{FXS}: Coefficient obtained according to the value of α_{EQ} from **Table 7.3.3-14**. For intermediate values of α_{EQ}, this coefficient is to be determined by interpolation.

(b) Single side skin structure with bilge hoppers (S2 Type)

$$C_{FX} = \frac{kC_{FXS} + C_{BH}C_{FXF}}{k + C_{BH}}$$

k: As specified in **7.3.3.1(1)(b)**

C_{BH}: Coefficient of the torsional stiffness effect of the bilge hopper as given in **Table 7.3.3-1**

C_{FXS} and C_{FXF}: Coefficients obtained according to the value of α_{EQ} from **Tables 7.3.3-14** and **7.3.3-15**. For intermediate values of α_{EQ}, these coefficients are to be determined by interpolation.

(c) Double side skin structures (D1, D2, D3 and D4 Types)

$C_{FX} = C_{FXS} + \beta_B(C_{FXF} - C_{FXS})$

β_B: Double bottom moment correction factor as given in **Table 7.3.3-2**

C_{FXS} and C_{FXF}: Coefficients obtained according to the value of α_{EQ} from **Tables 7.3.3-14** to **7.3.3-17**, depending on the structural model. For intermediate values of α_{EQ}, these coefficients are to be determined by interpolation.

(2) The shear force in floors is to be given by the following formula:

$F = C_{f(x_{DH})}C_{f(y_{DH})}C_{FY}P_{DH}SB_{DB}(kN)$

$C_{f(x_{DH})}$: To be taken as follows depending on α_{EQ} for the double bottom:

(a) For $\alpha_{EQ} \geq 4.0$

$C_{f(x_{DH})} = 1.0$

(b) For $\alpha_{EQ} < 4.0$

$$C_{f(x_{DH})} = \min\left(1.0, \max\left(0.5, C_{AS}\left(0.5 - \frac{|x_{DH}|}{\ell_{DB}}\right) + 0.5\right)\right)$$

$$C_{AS} = \min\left(4.0, \max\left(1.66, \frac{1.0}{0.467\left(\frac{1.0}{\alpha_{EQ}} - 0.25\right)} + 0.25\right)\right)$$

$C_{f(y_{DH})}$: To be taken as follows depending on the value of y:

$$C_{f(y_{DH})} = \min\left(1.0 - 2.0\frac{B_{BKT}}{B_{DB}}, \max\left(0.5, 2.0\frac{|y_{DH}|}{B_{DB}}\right)\right)$$

B_{BKT}: Length (m) of the connection between the double bottom and the bracket provided at the side end thereof. To be taken as 0 where no bracket is provided.

C_{FY}: Maximum shear force coefficient for floors to be taken as follows:

(a) Single side skin structure with no bilge hoppers (S1 Type)

$C_{FY} = C_{FYS}$

C_{FYS}: Coefficient obtained according to the value of α_{EQ} from **Table 7.3.3-14**. For intermediate values of α_{EQ}, this coefficient is to be determined by interpolation.

(b) Single side skin structure with bilge hoppers (S2 Type)

$$C_{FY} = \frac{kC_{FYS} + C_{BH}C_{FYF}}{k + C_{BH}}$$

C_{FYS} and C_{FYF}: Coefficients obtained according to the value of α_{EQ} from **Tables 7.3.3-14** and **7.3.3-15**. For intermediate values of α_{EQ}, these coefficients are to be determined by interpolation.

k: As specified in **7.3.3.1(1)(b)**

C_{BH}: Coefficient of the torsional stiffness effect of the bilge hopper as given in **Table 7.3.3-1**

(c) Double side skin structure (D1, D2 and D3 Types)

$C_{FY} = C_{FYS} + \beta_B(C_{FYF} - C_{FYS})$

β_B: Double bottom moment correction factor as given in **Table 7.3.3-2**

C_{FYS} and C_{FYF}: Coefficients obtained according to the value of α_{EQ} from **Tables 7.3.3-14** and **7.3.3-**

15, depending on the structural model. For intermediate values of α_{EQ}, these coefficients are to be determined by interpolation.

(d) Double side skin structure (D4 Type)

The following maximum shear force coefficients for floors, C_{FY1} and C_{FY2}, are to be used for the shipside side and the centre longitudinal bulkhead side, respectively:

$C_{FY1} = C_{FYS1} + \beta_B (C_{FYF1} - C_{FYS1})$

$C_{FY2} = C_{FYS2} + \beta_B (C_{FYF2} - C_{FYS2})$

β_B: Double bottom moment correction factor as given in **Table 7.3.3-2**

C_{FYS1}, C_{FYS2}, C_{FYF1}, and C_{FYF2}: Coefficients obtained according to the value of α_{EQ} from **Tables 7.3.3-16** and **7.3.3-17**, depending on the structural model. For intermediate values of α_{EQ}, these coefficients are to be determined by interpolation.

(3) The shear force in side stringers is to be given by the following formula:

$F = C_{f(x_{DH})} C_{f(z_{DH})} C_{FX} P_{DH} SB_{DS}$ (*kN*)

$C_{f(x_{DH})}$: To be taken as follows depending on the hatchway width:

(a) For the hatchway width is not more than 0.7*B*, or for no hatchway is provided (D2, D3 and D4 Types)

$$C_{f(x_{DH})} = \max\left(0.5, 2.0\frac{|x_{DH}|}{\ell_{DS}}\right)$$

(b) For the hatchway width exceeds 0.7*B* (D1 Type)

$$C_{f(x_{DH})} = \max\left(0.5, \min\left(1.0, 2.5\frac{|x_{DH}|}{\ell_{DS}} + 0.25\right)\right)$$

$C_{f(z_{DH})} = 1.0$

C_{FX}: Maximum shear force coefficient for side stringers to be taken as follows:

$C_{FX} = C_{FXS} + \beta_S (C_{FXF} - C_{FXS})$

β_S: Double side moment correction factor as given in **Table 7.3.3-3**. However, β_S is to be taken as 1.0 where greater than 1.0.

C_{FXS} and C_{FXF}: Coefficients obtained according to the value of α_{EQ} from **Tables 7.3.3-18** to **Table 7.3.3-23**, depending on the structural model. For intermediate values of α_{EQ}, these coefficients are to be determined by interpolation.

(4) The shear force in side transverses is to be given by the following formula:

$F = C_{f(x_{DH})} C_{f(z_{DH})} C_{FZ} P_{DH} SB_{DS}$(*kN*)

$C_{f(x_{DH})}$: To be taken as follows depending on α_{EQ} for the double side:

(a) For $\alpha_{EQ} \geq 4.0$

$C_{f(x_{DH})} = 1.0$

(b) For $\alpha_{EQ} < 4.0$

$$C_{f(x_{DH})} = \min\left(1.0, \max\left(0.5, C_{AS}\left(0.5 - \frac{|x_{DH}|}{\ell_{DS}}\right) + 0.5\right)\right)$$

$$C_{AS} = \min\left(4.0, \max\left(1.667, \frac{1.0}{0.467\left(\frac{1.0}{\alpha_{EQ}} - 0.25\right)} + 0.25\right)\right)$$

$C_{f(z_{DH})}$: To be taken as follows depending on the hatchway width:

(a) When hatchways are provided (D1 and D2 Type)

$$C_{f(z_{DH})} = \max\left(0.3, 1.0 - 1.667\left(\frac{|z_{DH}|}{B_{DS}} + 0.5\right)\right)$$

(b) When no hatchways are provided (D3 and D4 Type)

$$C_{f(z_{DH})} = \max\left(0.5, 1.0 - 1.667\left(\frac{|z_{DH}|}{B_{DS}} + 0.5\right)\right)$$

C_{FZ}: Maximum shear force coefficient for side transverses to be taken as follows:

$C_{FZ} = C_{FZS} + \beta_S (C_{FZF} - C_{FZS})$

β_S: Double side moment correction factor as given in **Table 7.3.3-3**

C_{FZS} and C_{FZF}: Coefficients obtained according to the value of α_{EQ} from **Tables 7.3.3-18** to **Table 7.3.3-23**, depending on the structural model. For intermediate values of α_{EQ}, these coefficients are to be determined by interpolation.

Table 7.3.3-14 Coefficients C_{FXS} and C_{FYS} at Double Bottom (Other than D4) Where Boundary Condition with Side Structure Is "Supported"

α_{EQ}	≤ 0.25	0.4	0.5	0.6	0.7	0.8	0.9
C_{FXS}	0.125	0.199	0.249	0.301	0.355	0.406	0.454
C_{FYS}	0.078	0.133	0.169	0.204	0.237	0.268	0.296
α_{EQ}	1.0	1.2	1.6	2.0	2.5	4.0 ≤	
C_{FXS}	0.497	0.567	0.650	0.680	0.686	0.659	
C_{FYS}	0.321	0.363	0.418	0.448	0.471	0.500	

Table 7.3.3-15 Coefficients C_{FXF} and C_{FYF} at Double Bottom (Other than D4) Where Boundary Condition with Side Structure Is "Fixed"

α_{EQ}	≤ 0.25	0.4	0.5	0.6	0.7	0.8	0.9
C_{FXF}	0.123	0.197	0.249	0.299	0.342	0.376	0.399
C_{FYF}	0.186	0.295	0.361	0.416	0.457	0.487	0.500
α_{EQ}	1.0	1.2	1.6	2.0	2.5	4.0 ≤	
C_{FXF}	0.414	0.426	0.419	0.408	0.396	0.365	
C_{FYF}	0.500	0.500	0.500	0.500	0.500	0.500	

Table 7.3.3-16 Coefficients C_{FXS}, C_{FYS1} and C_{FYS2} at Double Bottom (D4) Where Boundary Condition with Side Structure Is "Supported"

α_{EQ}	≤ 0.25	0.4	0.5	0.6	0.7	0.8	0.9
C_{FXS}	0.119	0.193	0.248	0.302	0.356	0.407	0.455
C_{FYS1}	0.093	0.147	0.186	0.221	0.255	0.286	0.314
C_{FYS2}	0.195	0.290	0.360	0.431	0.476	0.516	0.555
α_{EQ}	1.0	1.2	1.6	2.0	2.5	4.0 ≤	
C_{FXS}	0.498	0.569	0.651	0.682	0.687	0.660	
C_{FYS1}	0.340	0.382	0.438	0.469	0.489	0.506	
C_{FYS2}	0.585	0.618	0.642	0.645	0.643	0.641	

Table 7.3.3-17 Coefficients C_{FXF}, C_{FYF1} and C_{FYF2} at Double Bottom (D4) Where Boundary Condition with Side Structure Is "Fixed"

α_{EQ}	≤ 0.25	0.4	0.5	0.6	0.7	0.8	0.9
C_{FXF}	0.117	0.197	0.246	0.298	0.346	0.389	0.425
C_{FYF1}	0.187	0.293	0.367	0.429	0.482	0.525	0.559
C_{FYF2}	0.195	0.275	0.356	0.419	0.453	0.478	0.504
α_{EQ}	1.0	1.2	1.6	2.0	2.5	4.0 ≤	
C_{FXF}	0.453	0.490	0.511	0.506	0.495	0.458	
C_{FYF1}	0.585	0.618	0.642	0.645	0.643	0.641	
C_{FYF2}	0.520	0.531	0.528	0.520	0.514	0.516	

Table 7.3.3-18 Coefficients C_{FXS} and C_{FZS} at Double Side (D1) Where Boundary Condition with Bottom Structure Is "Supported"

α_{EQ}	≤ 0.25	0.4	0.5	0.6	0.7	0.8	0.9
C_{FXS}	0.083	0.137	0.173	0.207	0.236	0.262	0.286
C_{FZS}	0.082	0.127	0.153	0.178	0.200	0.219	0.238
α_{EQ}	1.0	1.2	1.6	2.0	2.5	4.0 ≤	
C_{FXS}	0.308	0.340	0.386	0.415	0.435	0.524	
C_{FZS}	0.254	0.284	0.328	0.360	0.382	0.409	

Table 7.3.3-19 Coefficients C_{FXF} and C_{FZF} at Double Side (D1) Where Boundary Condition with Bottom Structure Is "Fixed"

α_{EQ}	≤ 0.25	0.4	0.5	0.6	0.7	0.8	0.9
C_{FXF}	0.083	0.136	0.168	0.194	0.217	0.227	0.236
C_{FZF}	0.159	0.235	0.277	0.313	0.344	0.371	0.396
α_{EQ}	1.0	1.2	1.6	2.0	2.5	4.0 ≤	
C_{FXF}	0.242	0.247	0.242	0.245	0.249	0.235	
C_{FZF}	0.417	0.451	0.494	0.515	0.522	0.513	

Table 7.3.3-20 Coefficients C_{FXS} and C_{FZS} at Double Side (D2) Where Boundary Condition with Bottom Structure Is "Supported"

α_{EQ}	≤ 0.25	0.4	0.5	0.6	0.7	0.8	0.9
C_{FXS}	0.122	0.169	0.199	0.224	0.250	0.275	0.297
C_{FZS}	0.064	0.107	0.133	0.156	0.177	0.196	0.212
α_{EQ}	1.0	1.2	1.6	2.0	2.5	4.0 ≤	
C_{FXS}	0.318	0.351	0.390	0.406	0.413	0.415	
C_{FZS}	0.226	0.249	0.278	0.294	0.304	0.306	

Table 7.3.3-21 Coefficients C_{FXF} and C_{FZF} at Double Side (D2) Where Boundary Condition with Bottom Structure Is "Fixed"

α_{EQ}	≤ 0.25	0.4	0.5	0.6	0.7	0.8	0.9
C_{FXF}	0.107	0.152	0.176	0.195	0.211	0.228	0.240
C_{FZF}	0.140	0.215	0.256	0.289	0.316	0.336	0.352
α_{EQ}	1.0	1.2	1.6	2.0	2.5	4.0 ≤	
C_{FXF}	0.250	0.264	0.274	0.276	0.277	0.279	
C_{FZF}	0.363	0.377	0.386	0.387	0.387	0.384	

Table 7.3.3-22 Coefficients C_{FXS} and C_{FZS} at Double Side (D3 or D4) Where Boundary Condition with Bottom Structure Is "Supported"

α_{EQ}	≤ 0.25	0.4	0.5	0.6	0.7	0.8	0.9
C_{FXS}	0.107	0.158	0.188	0.215	0.239	0.260	0.278
C_{FZS}	0.070	0.113	0.138	0.161	0.181	0.197	0.211
α_{EQ}	1.0	1.2	1.6	2.0	2.5	4.0 ≤	
C_{FXS}	0.293	0.312	0.322	0.318	0.310	0.287	
C_{FZS}	0.222	0.237	0.253	0.258	0.259	0.259	

Table 7.3.3-23 Coefficients C_{FXF} and C_{FZF} at Double Side (D3 or D4) Where Boundary Condition with Bottom Structure Is "Fixed"

α_{EQ}	≤ 0.25	0.4	0.5	0.6	0.7	0.8	0.9
C_{FXF}	0.100	0.144	0.167	0.186	0.202	0.215	0.223
C_{FZF}	0.135	0.209	0.250	0.282	0.305	0.321	0.332
α_{EQ}	1.0	1.2	1.6	2.0	2.5	4.0 ≤	
C_{FXF}	0.228	0.232	0.226	0.220	0.213	0.195	
C_{FZF}	0.339	0.345	0.344	0.341	0.340	0.340	

7.4 Pillars, Struts, Etc.

7.4.1 Application

7.4.1.1 Members Subject to This Section

The requirements in 7.4 apply to members subject to axial compressive loads, such as pillars or struts.

7.4.2 Scantling Requirements

7.4.2.1 Buckling Strength Requirements (Euler Buckling)

For members subject to axial compressive loads, such as pillars or struts, their sectional area is to be not less than that obtained from the following formula:

$$A_{n50} = C_S \frac{F}{\sigma_{cr}} \times 10 \ (cm^2)$$

C_S: Safety factor to be taken as 1.4 However, when struts are placed between longitudinals in double bottom and double side, C_S is to be taken as 2.8.

F: Compressive load (kN) specified in each requirement. However, the compressive load may be obtained by direct strength analysis.

σ_{cr}: Buckling strength of beams and pillars or such members as struts to be taken as follows:

For $\sigma_E > \frac{\sigma_Y}{2}$: $\sigma_{cr} = \sigma_Y \left(1 - \frac{\sigma_Y}{4\sigma_E}\right)$ (N/mm^2)

For $\sigma_E \leq \frac{\sigma_Y}{2}$: $\sigma_{cr} = \sigma_E$ (N/mm^2)

$$\sigma_E = C_{BC}\pi^2 E \left(\frac{k}{l}\right)^2 \ (N/mm^2)$$

k: Minimum radius (mm) of gyration of beams and pillars or members such as struts

l: Distance (mm) from the top of the inner bottom plating, deck or any other structure, to which the lower end of pillars, struts, etc., is attached, to the bottom of the stiffeners or deck girder supported by the pillars, struts, etc.

C_{BC}: Fixed end effect coefficient as specified in the following **i)** to **iii)**:

i) For corrugated bulkheads supported at each end with a stool with a width exceeding 2 times the depth of the corrugation

$C_{BC} = 4$

ii) For corrugated bulkheads or cross ties supported at one end with a stool with a width exceeding 2 times the depth of the corrugation

$C_{BC} = 2$

iii) Other cases

$C_{BC} = 1$

Chapter 8 STRENGTH ASSESSMENT BY CARGO HOLD ANALYSIS

8.1 General

8.1.1 Overview

8.1.1.1 Overview and Structure of this Chapter

1 This Chapter specifies the requirements for strength assessment by cargo hold analysis. Strength assessment by cargo hold analysis means yield strength and buckling strength assessments carried out based on stress obtained from finite element analysis using partial structural models that represent a cargo hold and its surrounding structures.

2 The structure and overview of this Chapter are as shown in **Table 8.1.1-1**.

3 **Fig. 8.1.1-1** shows the standard procedure for strength assessment by cargo hold analysis.

Table 8.1.1-1 Overview of Chapter 8

Section	Title	Overview
8.1	General	Overview and application of this Chapter, etc.
8.2	Evaluation Area and Members to be Assessed	Evaluation area and members to be assessed
8.3	Structural Models	Extent of model, members to be modelled, meshing, etc.
8.4	Considerations for Corrosion	Net scantling approach
8.5	Boundary Conditions and Loads Conditions	Boundary conditions and loads conditions
8.6	Strength Assessment	Yield strength assessment and buckling strength assessment criteria
Annex 8.6	Buckling Strength Assessment based on Cargo Hold Analysis	Details of the buckling strength assessment method
Annex 8.6A	Strength Assessment Considering the Effect of Surrounding Structures	Strength assessment method taking into account the phenomena which occur in the surrounding structures after elastic buckling occurs in a member

Fig. 8.1.1-1 Flow Chart of Strength Assessment Using Standard Cargo Hold Analysis

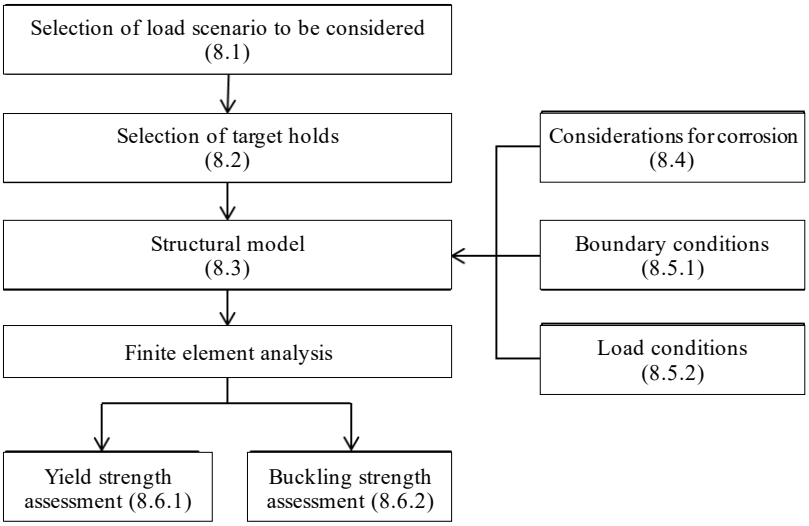

Note: Numbers in parentheses indicate section number numbers.

8.1.2 Application

8.1.2.1 Ships to be Assessed

1 Ships that fall under any of the following are to be assessed for yield strength and buckling strength of their primary supporting structures in accordance with the requirements in this Chapter:

(1) Ships not less than 200 m in length L_C

(2) Ships for which strength assessment by cargo hold analysis is required in **Part 2**

(3) In cases where deemed necessary by the Society

(4) Ships where "PS-DA" is affixed to classification characters in cases other than those above

2 Even for ships do not fall under any of **-1(1)** to **(4)** above, yield strength and buckling strength assessments of the primary supporting structures may be carried out in accordance with the requirements in this Chapter.

3 For ships with type of construction to which the requirements in this Chapter are not applicable, the requirements of this Chapter may be applied taking the ship's characteristics, etc. into account.

8.1.2.2 Selection of Load Scenario to be Considered

The load scenario to be considered are to be in accordance with the requirements of **1.2.2.4**.

8.1.3 Other General Requirements

8.1.3.1 Verification of Calculation Method and Accuracy

1 Where the arrangement and scantlings of primary supporting structures are determined by finite element analysis, necessary documents and data related to the calculation methods are to be submitted beforehand to the Society for approval.

2 Analysis programs are to take into account the combined effects of bending, shear, axial and torsional deformations and are to be confirmed to have sufficient analytical accuracy. Where deemed necessary, the Society may require the submission of details regarding the analysis method, verification of accuracy.

8.1.3.2 Definitions of Elements

Table 8.1.3-1 shows the types and definitions of the general elements used in finite element analysis.

Table 8.1.3-1 Definitions of Elements

Element type	Definition
Rod element	Line element with axial stiffness only and a constant cross-sectional area along the length of the element
Beam element	Line element with axial, torsional and bi-directional shear and bending stiffness and with constant properties along the length of the element
Shell element	Quadratic element with in-plane stiffness and out-of-plane bending stiffness and with constant thickness
Solid element	Cubic element with tri-directional stiffness and solid volume

8.1.3.3 Alternative Methods*

In applying this Chapter, the strength in the maximum load condition may be assessed based on an advanced analysis, such as a structural analysis based on direct load analysis, in accordance with methods deemed appropriate by the Society.

8.2 Evaluation Area and Members to be Assessed

8.2.1 Evaluation Area

8.2.1.1 Evaluation Area and Target Holds*

1 Strength assessment by cargo hold analysis specified in this Chapter is to be carried out for the whole cargo region.

2 Where the requirement in **-1** above is applied, cargo holds to be analysed (hereinafter referred to as the "target holds") are to be selected and investigation policy is to be submitted beforehand to the Society for approval. The following cargo holds are to be selected as target holds:

(1) A cargo hold in the midship part, which is defined as a hold with the centre of gravity position at or forward of $0.3L_C$ from *AE* and at or aft of $0.7L_C$ from *AE* (*See* **Fig. 8.2.1-1**).

(2) Cargo holds, such as ballast holds, with different loads (due to cargo and ballast water, etc.) than other holds

(3) Other cargo holds deemed necessary by the Society

3 In selecting the target holds from among holds falling under **-2(1)** above, where there are two or more cargo holds with the same or similar characteristics, the magnitudes and combinations of loads act on the respective holds are to be considered and one cargo hold selected appropriately is used. For cargo holds of different sizes, the hold with the largest capacity is to be used.

Fig. 8.2.1-1 Definition of Cargo Holds in Chapter 8

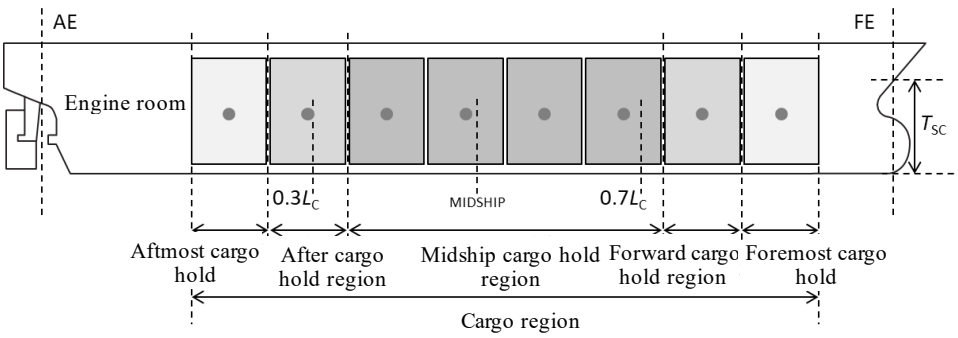

8.2.2 Members to be Assessed

8.2.2.1 Members to be Assessed in Maximum Load Condition, Harbour Condition and Testing Condition

Where strength assessments are carried out in the maximum load condition, the harbour condition and the testing condition, the

following members and locations are to satisfy the assessment criteria specified in this Chapter:

(1) Members forming primary supporting structures

(2) Other members and locations as deemed necessary by the Society

8.2.2.2 Members to be Assessed in Flooded Condition*

Where strength assessment is carried out in the flooded condition, the following members and locations are to satisfy the assessment criteria specified in this Chapter:

(1) Watertight bulkhead structures at the boundaries of compartments not carrying liquids

(2) Other members and locations as deemed necessary by the Society

8.3 Structural Model

8.3.1 Extent of Model and Members to be Modelled

8.3.1.1 Extent of Model*

1 The extent of a model is to be determined, taking into account such factors as the arrangement of cargo holds and tanks and the loading conditions to be considered, to reproduce the structural responses of the target hold selected in **8.2.1.1** accurately.

2 The model to be created is to represent three adjacent cargo holds with the target hold in the middle. The standard modelling method is to model the full depth and the full width of the holds. **Figs. 8.3.1-1** and **Fig. 8.3.1-2** show examples of structural models representing the cargo holds in the midship part of typical ship type configurations.

3 In principle, the model is to reproduce the geometry of the hull form. Where deemed appropriate by the Society, a parallel model which extended the shape of the transverse section at the middle of the target hold may be used.

4 Where the foremost cargo hold or the aftmost cargo hold is selected as the target hold, the structures and other particulars of the cargo hold adjacent to the target hold, as well as the fore part or the engine room adjacent thereto, are to be appropriately modelled. The extent of model for the fore part and the engine room is to be as deemed appropriate by the Society.

Fig. 8.3.1-1 Example of Typical Structural Model

Example of cargo hold model of an oil tanker
(Shows only the port side)

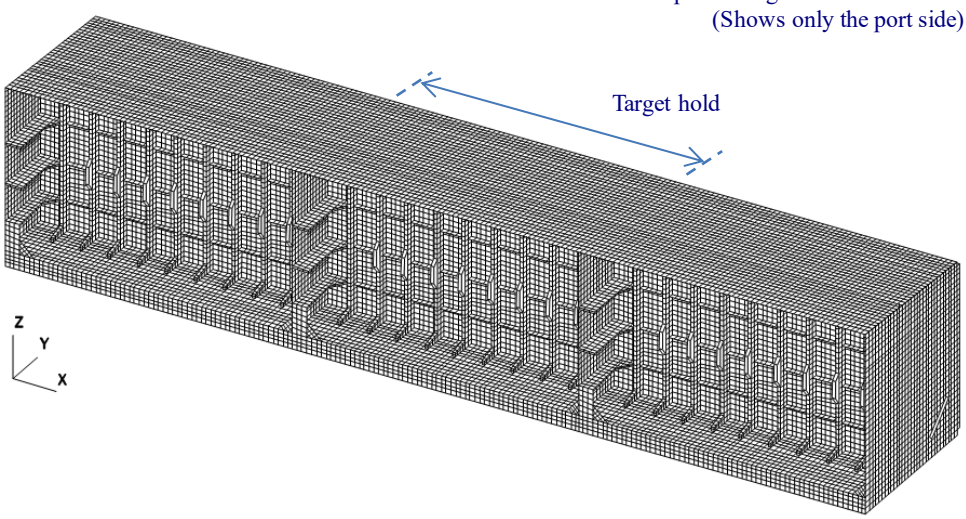

Fig. 8.3.1-2 Example of Typical Structural Model

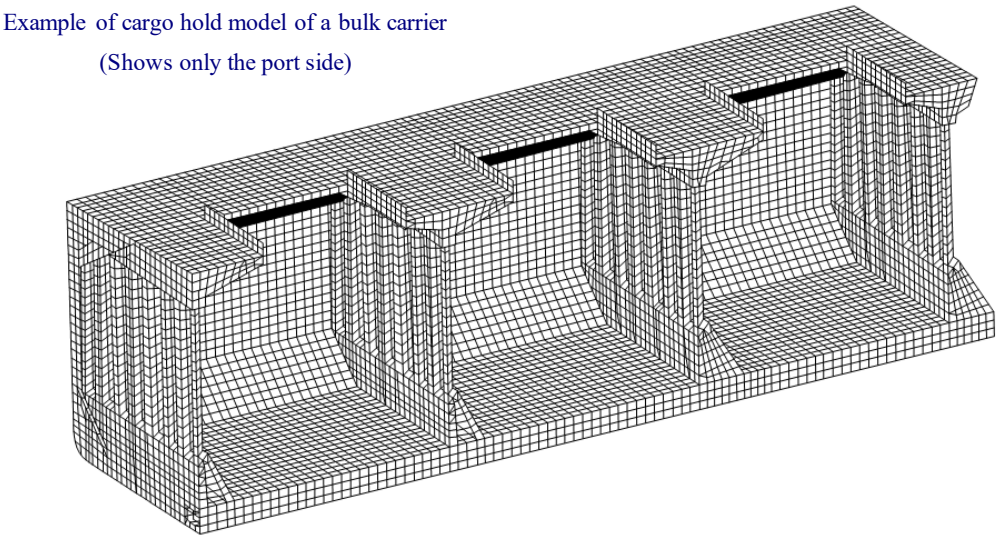

8.3.1.2 Members to be Modelled*

1 The members to be modelled are to be those forming primary supporting structures within the extent of model. Stiffeners attached to plating and girders are also to be included in the model.

2 Modelling of superstructures and other members that do not significantly affect the hull structural strength assessment may be omitted.

8.3.2 Elements

8.3.2.1 Element Types

1 The element types used in the model are to be in accordance with the followings:

(1) Plates are to be modelled using shell elements.

(2) In principle, stiffeners are to be modelled using beam elements so as to take the eccentricity of the neutral axis into account.

(3) Face plates of primary supporting members and of brackets are to be modelled using rod elements or beam elements.

2 For members with structural responses that are difficult to be represented by modelling using shell elements, rod elements and beam elements, using solid elements may be required.

8.3.2.2 Properties of Elements

1 General rolled steels for hull are to be modelled so as to have a Young's modulus of 206,000 N/mm^2, a Poisson's ratio of 0.3 and a density of 7.85 t/m^3.

2 For the modelling of materials other than general rolled steels for hull, such as stainless steels or aluminium alloys, the Young's modulus, Poisson's ratio and density to be used in finite element analysis are to be determined and appropriate documents are to be submitted beforehand to the Society for approval.

8.3.3 Meshing and Related Issues

8.3.3.1 General*

1 Meshing of element is to be performed so as to reproduce the structural responses of the target hold accurately. In principle, the following **(1)** to **(3)** are to be complied with:

(1) The aspect ratio of shell elements is to be kept as close to 1 as possible.

(2) Variation of the mesh size and the use of triangular elements are to be kept to a minimum.

(3) The mesh size is to comply as much as possible with the requirements in the following **(a)** to **(d)** so as to create meshing that follows the stiffening system of the actual members (*See* **Figs. 8.3.3-1** and **8.3.3-2**).

(a) One element between every stiffener on longitudinal and transverse stiffening structures, and the element length is not to be greater than 2 stiffeners spaces with a minimum of three elements between primary supporting members.

(b) One element between every stiffener on transverse bulkheads.

(c) One element between every stiffener on transverse girders, vertical webs and horizontal girders.

(d) At least three elements over the depth of transverse girders, vertical webs and horizontal girders on transverse bulkheads.

For girders with small web depth, modelling using two elements over the depth is acceptable, provided that there is at least one element between every stiffener.

2 For members of sizes equal to or smaller than the typical mesh size specified in **-1** above, the structural representation using elements smaller than the typical mesh size may be required, as deemed necessary by the Society.

8.3.3.2 Modelling of Openings

1 For elements around openings, in locations where application of the stress correction method specified in **8.6.1.1-3** is taken as being inappropriate (e.g. openings the transverse girder in bilge part), such openings are to be modelled.

2 In applying the requirements in **-1** above, the openings are to be modelled by recreating the opening's shape or removing the appropriate element in consideration of size and position of the opening.

8.3.3.3 Modelling of Brackets*

1 Brackets are to be modelled where they contribute to the strength of primary supporting structures and their size is not less than the typical mesh size.

2 The curvature of the free edge on large brackets of primary supporting members is to be modelled.

Fig. 8.3.3-1 Typical Mesh Size on Transverse Girder

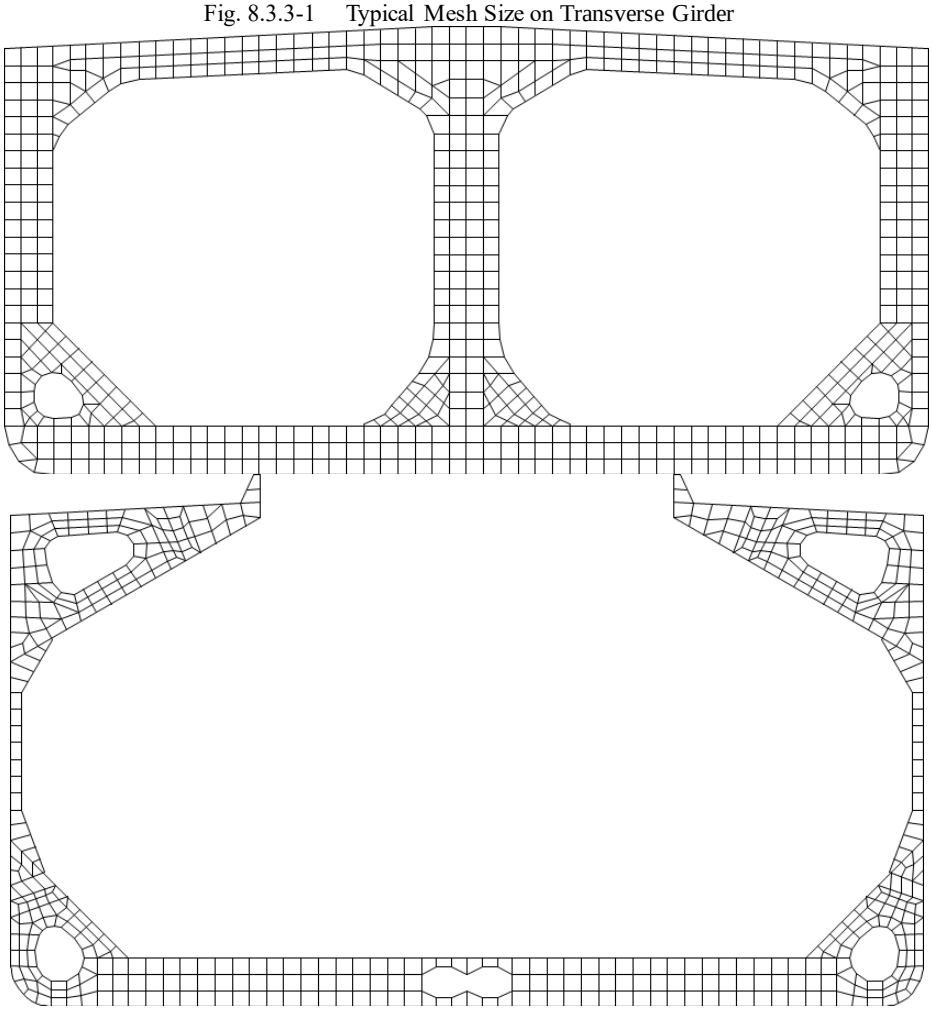

Fig. 8.3.3-2 Typical Mesh Size on Transverse Bulkhead

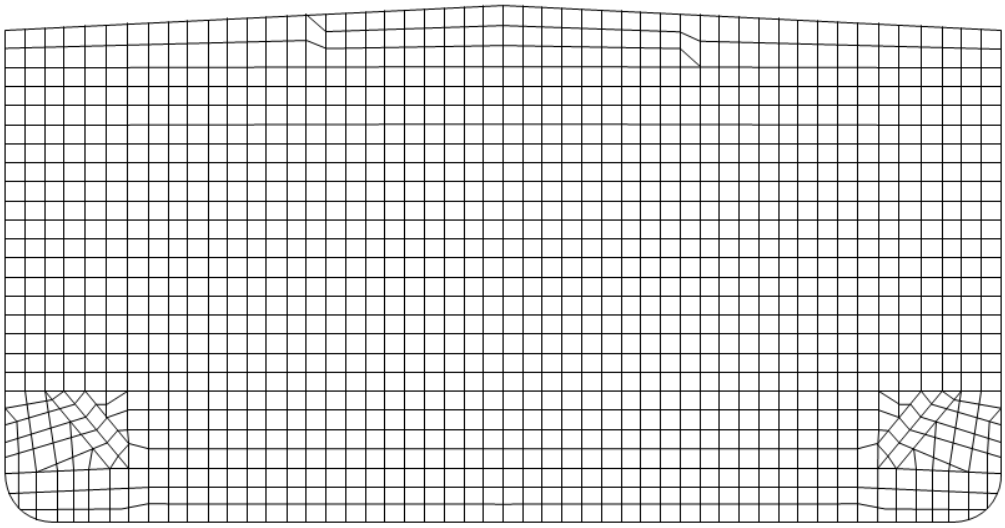

8.3.3.4 Modelling of Corrugated Bulkheads

Diaphragms in the stools, supporting structure of corrugated bulkheads and internal longitudinal and vertical stiffeners on the stool plating are to be modelled in accordance with the following **(1)** to **(7)**:

(1) The geometry of corrugated bulkheads is to be modelled.

(2) The mesh on the flange and the web of the corrugated bulkhead is, in principle, to follow the stiffener spacing inside the bulkhead stool.

(3) The mesh on the flange of the corrugated bulkhead is not to exceed the flange width.

(4) The mesh on the web of the corrugated bulkhead is to be divided, with a minimum of two elements for the web width.

(5) Where difficulty occurs in matching the mesh on the corrugations directly with the mesh on the stool, it is acceptable to adjust the mesh on the stool in way of corrugations.

(6) For a corrugated bulkhead without an upper stool and/or lower stool, it may be necessary to adjust the geometry in the model. The geometry is to be adjusted so as to retain the shape and positional relationship of the corrugations and primary supporting members. If necessary, modelling is to be made by adjusting the stiffeners and plate seams.

(7) Openings in diaphragms are to be modelled.

8.3.3.5 Local Models*

1 Where the geometry or structural responses cannot be adequately represented with the typical mesh size specified in **8.3.3.1**, strength assessment may be carried out using a local structural model with a finer mesh size (hereinafter, "local model") of the location to be considered. The finer mesh size means a mesh size appropriately determined so as to obtain the intended representation of structural responses.

2 A smooth transition of the mesh size from a location modelled with the finer mesh size to locations modelled with the typical mesh size is to be maintained.

3 Finite element analysis using only a local model may be carried out utilizing the data obtained from finite element analysis using a structural model reproducing cargo holds.

8.4 Considerations for Corrosion

8.4.1 Net Scantling Approach

8.4.1.1

The net scantling approach specified in **3.3** is to be applied to the plate thicknesses in the structural models and the buckling strength assessment specified in **8.6.2**.

8.5 Boundary Conditions and Loads Conditions

8.5.1 Boundary Conditions*

8.5.1.1 General

Boundary conditions are to be set accordingly to appropriately reproduce the structural responses of the target hold in consideration of the extent of model and loads to be considered, etc.

8.5.1.2 Standard Boundary Conditions

1 Where a model to be used represents three cargo holds with the target hold in the middle, the standard boundary conditions are to consist of the rigid links at model ends and point constraints.

2 Where the target hold is the foremost cargo hold, the standard boundary conditions are to consist of the rigid link and planar constraints at the aft end of the model. Where the target hold is the aftmost cargo hold, the conditions are to consist of them at the fore end of the model.

8.5.2 Loads Conditions*

8.5.2.1 Loads to be Considered

1 For the condition selected in accordance with the requirement in **8.1.2.2**, the loads based upon the requirements specified in **4.6** are to be reproduced.

2 In applying **-1** above, the external pressure may be simplified by extending the pressure at the middle of the target hold into along the whole longitudinal direction, as deemed appropriate by the Society.

3 In applying **-1** above, for ships with structure symmetrical about centreline, the assessment may be carried out in accordance with either of the following **(1)** or **(2)**:

(1) The evaluation area is to be limited only to either the port or starboard side half, without omitting the equivalent design waves to be considered.

(2) Both sides of a ship may be assessed, omitting either of the equivalent design waves to be considered based upon waves from the port or starboard side, i.e. *BR*-1*S* may be omitted where *BR*-1*P* taken into account. Omissions in the similar way may be carried out for any load combinations of *BR*-2*P* and *BR*-2*S*, *BP*-1*P* and *BP*-1*S* and *BP*-2*P* and *BP*-2*S*.

8.5.2.2 Methods of Load Application to Structural Models

1 For external pressures, internal pressures due to liquid cargoes and due to bulk cargoes, a constant pressure calculated at the element's centroid is to be applied to the shell element of the loaded surfaces (e.g. outer shells for external pressure and tank or cargo hold boundaries for internal pressure).

2 Loads due to containers are to be applied to the nearest nodal point from the locations where container comes into contact as the point load.

3 Load application methods that do not fall under **-1** and **-2** above are to be as deemed appropriate by the Society.

4 Unless otherwise specified, the effects of the static and dynamic loads due to the hull structure's self-weight are to be considered.

5 The vertical and horizontal bending moments act in the target hold are to be adequately adjusted based upon the boundary conditions specified in **8.5.1** and the value of moments for each analysis case specified in **4.6**, in accordance with a method deemed appropriate by the Society. As for the adjustment, the direct method is to be taken as the standard method.

8.6 Strength Assessment

8.6.1 Yield Strength Assessment

8.6.1.1 Reference Stress

1 Equivalent stress σ_{eq} (N/mm^2) given by the following formula is to be used as the reference stress of shell elements for the yield strength assessment. The stresses at the element centroid of the mid-plane are to be used.

$$\sigma_{eq} = \sqrt{{\sigma_1}^2 - \sigma_1\sigma_2 + {\sigma_2}^2 + 3{\tau_{12}}^2}$$

σ_1, σ_2: In-plane normal stress (N/mm^2).

τ_{12}: Shear stress (N/mm^2), corresponding to σ_1, σ_2.

2 For rod elements or beam elements, axial stress σ_a (N/mm^2) is to be used as the reference stress. The axial stress at the middle of the element length is to be used.

3 In applying **-1** above, for locations with an opening that has not been modelled, the shear stress and the stress in the spanwise direction of girder around the opening are to be corrected in consideration of the effective shear area of the web and the reference stress σ_{eq-cor} is to be calculated. The effective shear area of the web is to be taken as the web area deducting the area lost due to openings in accordance with the following **(1)** or **(2)**. However, the calculation of the stress may be omitted where it is obvious that the results of the yield strength assessment are not significantly affected.

(1) When both sides of the web are plating, the reference stress σ_{eq-cor} is to be calculated with the shear stress modified in accordance with the following formula:

$$\sigma_{eq-cor} = \sqrt{{\sigma_{elem-s}}^2 - \sigma_{elem-s} \cdot \sigma_{elem-d} + {\sigma_{elem-d}}^2 + 3{\tau_{cor}}^2}$$

σ_{elem_s}: Stress in the spanwise direction of the girder (N/mm^2) before correction.

σ_{elem_d}: Stress in the depth direction of the girder (N/mm^2) before correction.

τ_{cor}: Corrected shear stress (N/mm^2), to be taken as follows.

$$\tau_{cor} = \frac{ht_{mod-n50}}{A_{shr-n50}} \tau_{elem_ave}$$

τ_{elem_ave}: Shear stress (N/mm^2) before correction, taken as the average shear stress value in the girder depth direction.

h: Height (mm) of the girder web in way of the opening.

$t_{mod-n50}$: Modelled web thickness (mm) in way of the opening.

$A_{shr-n50}$: Effective net shear area of the web(mm^2) taken as the web area deducting of the area lost due to the openings calculated with the effective web height h_{eff} (mm). h_{eff} is to be taken as the lesser of the following, where the third formula is only taken into account for an opening located at a distance less than $h_w/3$ from the cross section to be considered.

$$h_{eff} = h_w$$

$$h_{eff} = h_{w3} + h_{w4}$$

$$h_{eff} = h_{w1} + h_{w2} + h_{w4}$$

h_w: Web height of primary supporting member

h_{w1}, h_{w2}, h_{w3}, h_{w4}: Dimensions shown in **Fig. 8.6.1-1**

(2) When both sides of the web are any case other than those in **(1)** above, the reference stress σ_{eq-cor} is to be calculated with the shear stress and the stress in the spanwise direction of girder modified in accordance with the following formula:

$$\sigma_{eq-cor} = \sqrt{{\sigma_{cor-s}}^2 - \sigma_{cor-s} \cdot \sigma_{elem-d} + {\sigma_{elem-d}}^2 + 3{\tau_{cor}}^2}$$

σ_{cor_s}: Corrected element stress (N/mm^2) in the spanwise direction of girder, to be taken as follows:

$$\sigma_{cor-s} = \frac{ht_{mod-n50}}{A_{shr-n50}} \sigma_{elem-s}$$

τ_{cor}, σ_{elem-s}, h, $t_{mod-n50}$, $A_{shr-n50}$: As specified in **(1)** above.

4 Where **8.3.3.5** is applied, the average value of multiple element stresses may be used as the reference stress within the surrounding area equivalent to the typical element size.

Fig. 8.6.1-1 Effective Sectional Area in way of Web Opening

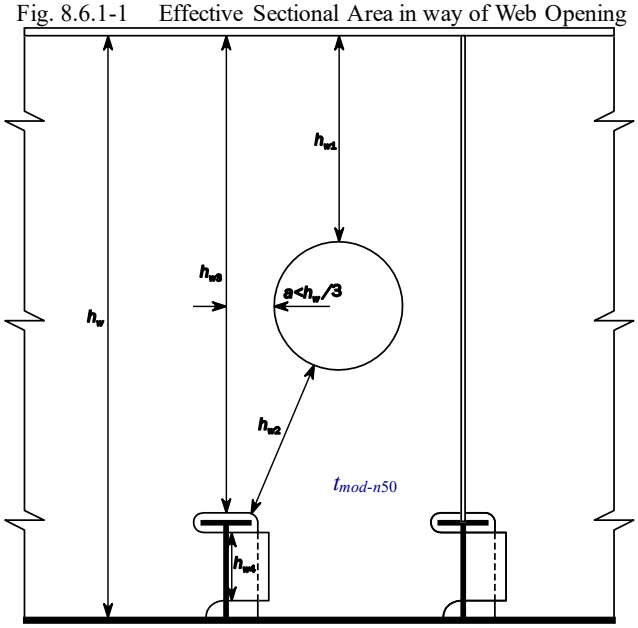

8.6.1.2 Criteria

All members to be assessed in the target hold are to comply with the following formula:

$\lambda_y \leq \lambda_{yperm}$

λ_y: Yield utilisation factor, taken as follows:

For shell elements: $\lambda_y = \frac{\sigma_{eq}}{235/K}$

For rod elements or beam elements: $\lambda_y = \frac{|\sigma_a|}{235/K}$

K: Material factor specified in 3.2.1.

λ_{yperm}: Permissible utilisation factor, taken as specified in Table 8.6.1-1:

Table 8.6.1-1 Permissible Yield Utilisation Factor λ_{yperm}

Members and areas to be assessed	Maximum load condition	Harbour condition	Testing condition	Flooded condition
• Members forming primary supporting structure	1.0	0.85	1.0	1.0
• Corrugation of vertically corrugated bulkheads with lower stool and horizontally corrugated bulkhead, under lateral pressure from liquid loads • Supporting structure in way of the lower end of corrugated bulkheads without a lower stool(1), (2)	0.9	0.76	1.0	1.0
• Corrugation of vertically corrugated bulkheads without lower stool under lateral pressure from liquid loads	0.81	0.68	1.0	1.0

Note:

(1) The extent of the supporting structure for corrugated transverse bulkheads is as follows:

(a) Longitudinal direction: Extent within half a transverse girder space forward and aft of the bulkhead

(b) Vertical direction: Extent equal to the corrugation depth

(2) The extent of the supporting structure for corrugated longitudinal bulkheads is as follows:

(a) Transverse direction: Extent within three longitudinal stiffener spacing from each side of the bulkhead

(b) Vertical direction: Extent equal to the corrugation depth

8.6.2 Buckling Strength Assessment*

8.6.2.1 Criteria

1 In principle, all members in the target hold are to satisfy the buckling assessment criteria specified in **Annex 8.6 "Buckling Strength Assessment based on Cargo Hold Analysis"**. The permissible buckling utilisation factor in this assessment is to be in accordance with **Table 8.6.2-1**.

2 Notwithstanding **-1** above, strength assessment considering the characteristics of a member to be assessed and surrounding structures of the member may be carried out where the surrounding structures are able to withstand compressive loads instead of the member due to load redistribution after the elastic buckling of the member occurs and where the strength deemed as sufficient by the Society. In this case, the strength assessment specified in **Annex 8.6A "Strength Assessment Considering Effect of Surrounding Structures"** may be applied. Where **Annex 8.6A** is applied, the permissible utilisation factor is to be 0.8 for the utilisation factor specified in **An2.6.1**. As for the yield strength assessment and buckling assessment specified in **An2.7.1** in the said Annex, **8.6.1** and **8.6.2.1-1** are to be satisfied.

3 Notwithstanding **-1** above, where compliance with **Annex 8.6** is recognised as difficult due to the stress distribution or deformation characteristics assumed for the buckling strength assessment method specified in **Annex 8.6**, requirements deemed appropriate by the Society are to be followed.

Table 8.6.2-1 Permissible Buckling Utilisation Factor η_{all}

Members and areas to be assessed	Maximum load condition	Harbour condition	Tesing condition	Flooded condition
• Members forming primary supporting structure	1.0	0.85	1.0	1.0
• Corrugation of vertically corrugated bulkheads with lower stool and horizontally corrugated bulkhead, under lateral pressure from liquid loads • Supporting structure in way of lower end of corrugated bulkheads without lower stool(1), (2)	0.9	0.76	1.0	1.0
• Corrugation of vertically corrugated bulkheads without a lower stool under lateral pressure from liquid loads	0.81	0.68	1.0	1.0
• Struts, pillars and cross ties	0.75	0.65	0.75	0.75

Note:
(1) The extent of the supporting structure for corrugated transverse bulkheads is as follows:
(a) Longitudinal direction: Extent within half a transverse girder space forward and aft of the bulkhead
(b) Vertical direction: Extent equal to the corrugation depth
(2) The extent of the supporting structure for corrugated longitudinal bulkheads is as follows:
(a) Transverse direction: Extent within three longitudinal stiffeners spacing from each side of the bulkhead
(b) Vertical direction: Extent equal to the corrugation depth

Annex 8.6 BUCKLING STRENGTH ASSESSMENT BASED ON CARGO HOLD ANALYSIS

Symbols

a: Length (mm) of the longer side of plate.

b: Length (mm) of the shorter side of plate

t_p: Thickness (mm) of the plate panel

l: Span (mm) of stiffener

s: Spacing (mm) of stiffener

h_w: Web height (mm)

t_w: Web thickness (mm)

b_f: Width of face plate (mm)

t_f: Thickness (mm) of face plate. For bulb sections, the mean thickness of the bulb is to be used.

A_s: Cross-sectional area (cm^2) of stiffener

A_p: Cross-sectional area (cm^2) of plate

$$A_p = bt_p \times 10^{-2}$$

A_{sp}: Cross-sectional area (cm^2) of stiffened panel

$$A_{sp} = A_s + A_p$$

σ_{Yp}: Specified minimum yield stress (N/mm^2) of plate

σ_{Ys}: Specified minimum yield stress (N/mm^2) of stiffener

σ_x, σ_y: Reference normal stress (N/mm^2) acting on panel, as specified in **An3.2.1** and **An3.2.2**

τ: Reference shear stress (N/mm^2) acting on panel, as specified in **An3.2.3**

α: Aspect ratio of plate

$$\alpha = \frac{a}{b}$$

β: Slenderness ratio of plate

$$\beta = \frac{b}{t}\sqrt{\frac{\sigma_Y}{E}}$$

E: Young's modulus taken as 2.06×10^5 (N/mm^2)

ν: Poisson's ratio taken as 0.3

An1 General

An1.1 Overview

An1.1.1 Application

1 In the application of **8.6.2.1-1**, buckling strength assessments carried out based on the stresses acting on each structural member obtained by cargo hold analysis are to be performed according to the method specified in this Annex.

2 Notwithstanding **-1** above, the buckling strength of each structural member may be obtained by a finite element method that can incorporate the nonlinearity of the material and geometrical properties shown in **An4** in cases where approved by the Society. In such cases, models are to correctly incorporate the effects of adjacent structures and initial imperfections. In addition, detailed information and data related to the analysis method adopted and results obtained are to be submitted to the Society.

An1.1.2 Scope

Buckling strength analysis is to be carried out individually for each structural member that is to be evaluated by cargo hold analysis, and is to be performed for the following structural members.

(1) Plates and stiffeners constituting plate and girder members (**An2.1**, **An2.2**)

(2) Plates with openings constituting girder members (**An2.3**)

(3) Corrugated bulkheads (**An2.4**)

(4) Struts, pillars, and crossties (**An2.5**)

An1.1.3 Buckling Strength Assessment Methods for Plates and Stiffeners

Plates and stiffeners subject to **An1.1.2(1)** are to be evaluated using either of the following two methods depending on the position where they are located.

(1) Stiffened panel assessment target members

The buckling strength of the plates and stiffeners shown in **(a)** and **(b)** below is to be evaluated by the method shown in **An2.1**.

(a) Plates and stiffeners of longitudinal stiffening systems constituting longitudinal hull girder structural members

(b) Plates and stiffeners to which large compressive loads are applied in the span direction of stiffeners

(2) Plate panel assessment target members

Buckling strength assessment of plates other than those in accordance with **(1)** above is to be performed according to the method shown in **An2.2**. In addition, stiffener webs need not to be evaluated as plate panels.

An1.1.4 Plates of Different Thicknesses or Different Specified Minimum Yield Stresses

For buckling strength assessments of plates of different thicknesses or different specified minimum yield stresses, average values may be used in consideration of the stress distribution acting on the plate.

An2. Buckling Strength Assessment Methods for Different Types of Structures

An2.1 Buckling Strength Assessments for Stiffened Panels

An2.1.1 Buckling Strength Assessments under Compressive Loads in Longer Side Direction

1 The buckling utilisation factor η_l for a stiffened panel under compressive loads in the longer side direction is to be obtained as follows:

$$\eta_l = \frac{1}{\gamma_c}$$

Where:

γ_c: Multiplier calculated using the method shown in **-2**

2 The minimum multiplier $\gamma_c (> 0)$ that satisfies the buckling criteria performed according to the procedure from the following **(1)** to **(4)** is to be obtained by iterative calculation.

(1) Calculation of stresses and pressures for buckling strength assessments

$$\begin{bmatrix} \sigma_x' \\ \sigma_y' \\ \tau' \\ P' \end{bmatrix} = \gamma_c \begin{bmatrix} \sigma_x \\ \sigma_y \\ \tau \\ P \end{bmatrix}$$

Where:

σ_x', σ_y', τ': Stresses (N/mm^2) used in calculation of buckling criteria, multiplied by the multiplier

P': Pressure (kN/m^2) used in calculation of buckling criteria, multiplied by the multiplier

(2) Calculation of buckling deflection w_l

The amplitude w_l (mm) of the buckling deflection generated when the longitudinal compressive load is dominant is to be obtained by the following **(a)** or **(b)**:

(a)

$$w_l = \sqrt[3]{-f_b + \sqrt{f_a{}^3 + f_b{}^2}} + \sqrt[3]{-f_b - \sqrt{f_a{}^3 + f_b{}^2}} \quad \text{for } f_a{}^3 + f_b{}^2 \geq 0$$

(b)

$$w_l = 2\sqrt{-f_a}\cos\frac{\theta}{3} \quad \text{for } f_a{}^3 + f_b{}^2 < 0$$

where for both **(a)** and **(b)**

$$f_a = -\frac{1}{3f_2}(f_1 + w_{l0}{}^2 f_2 - f_3)$$

$$w_{l0} = 0.005\beta^2 t_p \ (mm)$$

$$f_1 = \frac{\pi^2}{4}(\sigma_x' + \sigma_y')t_p$$

$$f_2 = \frac{2A_s + A_p}{A_{sp}} \frac{\pi^4 E}{32b^2} t_p$$

$$f_3 = \frac{\pi^4 E}{12(1-\nu^2)b^2} t_p{}^3 + \frac{k_w \pi^4 (\pi^2 E I_W \times 10^6 + b^2 G I_T \times 10^4)}{2b(\pi^4 E I_W \times 10^6 + b^2 \pi^2 G I_T \times 10^4 + b^4 k_w)}$$

Where:

k_w: Rigidity (N) of the stiffener web according to **Table An1**

I_P: Polar moment of inertia (cm^4) of the stiffener according to **Table An1**

I_W: Sectional moment of inertia (cm^6) of the stiffener according to **Table An1**

I_T: Saint-Venant's torsion constant (cm^4) of the stiffener according to **Table An1**

$$f_b = -\frac{f_3}{2f_2} w_{l0}$$

$$\theta = \operatorname{arccot} \frac{-f_b}{\sqrt{-f_a{}^3 - f_b{}^2}} \ (rad)$$

Table An1 Parameters for Stiffness of Stiffeners

	Flat bars	Bulb plates, angles, L2, L3 and T-sections
I_P	$\frac{h_w{}^3 t_w}{3} \times 10^{-4}$	$\left[\frac{A_w(e_f - 0.5t_f)^2}{3} + A_f e_f{}^2\right] \times 10^{-2}$ A_w: Cross-sectional area (cm^2) of the stiffener web A_f: Cross-sectional area (cm^2) of the stiffener flange
I_T	$\frac{h_w t_w{}^3}{3}\left(1 - 0.63\frac{t_w}{h_W}\right) \times 10^{-4}$	$\left[\frac{(e_f - 0.5t_f)t_w{}^3}{3}\left(1 - 0.63\frac{t_w}{e_f - 0.5t_f}\right) + \frac{b_f t_f{}^3}{3}\left(1 - 0.63\frac{t_f}{b_f}\right)\right] \times 10^{-4}$
I_W	$\frac{h_w{}^3 t_w{}^3}{36} \times 10^{-6}$	Bulb plates, angles, L2 and L3 $\frac{A_f{}^3 + A_w{}^3}{36} + e_f{}^2\left[\frac{A_f b_f{}^2 + A_w t_w{}^2}{3} - \frac{(A_f b_f + A_w t_w)^2}{4(A_f + A_w)}\right] \times 10^{-4}$ T-sections $\frac{b_f{}^3 t_f e_f{}^2}{12} \times 10^{-6}$
k_w	$\frac{E t_w{}^3}{3h_w}$	$\frac{E t_w{}^3}{4h_w}$
e_f	h_w	Bulb plates $h_w - t_f/2$ Angles, L2 and T-sections $h_w + t_f/2$ L3 $h_w - t_f/2 - d_e$

(3) Calculation of various types of stresses generated by buckling deflection w_l

Stresses σ_{xp}, σ_{xs}, σ_{bs}, σ_{bp}, σ_{crt} (N/mm^2) acting on the plate and stiffener in the longer side direction are to be obtained from the following **(a)** to **(c)**.

(a) Axial stress (N/mm^2) acting on the plate and stiffener

$$\sigma_{xp} = \sigma_x{}' - \frac{A_s}{A_{sp}}(w_l{}^2 - w_{l0}{}^2)\frac{\pi^2 E}{8b^2}$$

$$\sigma_{xs} = \sigma_x{}' - \nu\sigma_y{}' + \frac{A_p}{A_{sp}}(w_l{}^2 - w_{l0}{}^2)\frac{\pi^2 E}{8b^2}$$

(b) Bending stress (N/mm^2) acting on plate and stiffener

$$\sigma_{bs} = \frac{M_A + M_S}{Z_F} \times 10^{-3}$$

$$\sigma_{bp} = \frac{M_A + M_P}{Z_P} \times 10^{-3}$$

Where:

M_A: Bending moment (*N-mm*) generated by compression; however, buckling strength requirements are not considered to be satisfied when $P_x \geq P_{crb}$

$M_A = \frac{P_x}{1-\frac{P_x}{P_{crb}}} w_{s0}$ for $P_x < P_{crb}$ but $M_A = 0$ for $P_x < 0$

P_x: Axial force (*N*) acting on stiffened panel

$P_x = (A_{sp}\sigma_x{}' - \nu A_s \sigma_y{}') \times 10^2$

P_{crb}: Elastic bending buckling load (*N*) of stiffened panel

$P_{crb} = EI_{eff}\left(\frac{\pi}{l}\right)^2 \times 10^4$

I_{eff}: Moment of inertia (cm^4) of stiffened panel with consideration given to the effective plate width b_{eff} (mm)

$b_{eff} = b\ (mm)$ for $f_a{}^3 + f_b{}^2 \geq 0$

$b_{eff} = \frac{b}{2}\ (mm)$ for $f_a{}^3 + f_b{}^2 < 0$

w_{so}: According to the following formula:

$w_{s0} = 0.001a\ (mm)$

M_S: Bending moment (*N-mm*) generated by pressure load when the stiffener side is being compressed

$$M_S = -\frac{P'ba^2}{24} \times 10^{-3}$$

M_P: Bending moment (*N-mm*) generated by pressure load when plate side is being compressed

$$M_P = \frac{P'ba^2}{8} \times 10^{-3}$$

Z_F: Flange side section modulus (cm^3) in consideration of effective plate width b_{eff} (mm)

Z_P: Attached plate side section modulus (cm^3) in consideration of effective plate width b_{eff} (mm)

(c) Warping stress σ_w (N/mm^2) generated by tortional buckling of the stiffener; however, buckling strength requirements are not satisfied considered to be satisfied when $\sigma_{xs} \geq \sigma_{crt}$.

$\sigma_w = Ey_w(h_w + 0.5t_f)\Phi_0\left(\frac{\pi}{a}\right)^2 \frac{\sigma_{xs}}{\sigma_{crt}-\sigma_{xs}}$ for $\sigma_{xs} < \sigma_{crt}$ but $\sigma_w = 0$ for $\sigma_{xs} < 0$

y_w: Distance (mm) from stiffener web centre to flange free end

Φ_0:

$$\Phi_0 = 0.0001\frac{l}{h_w}\ \text{(rad)}$$

σ_{crt}: Tortional elastic buckling stress (N/mm^2) of the stiffener

$$\sigma_{crt} = \frac{E}{I_P}\left[\left(\frac{m\pi}{l}\right)^2 I_W \times 10^2 + \frac{1}{2(1+\nu)} I_T + \left(\frac{l}{m\pi}\right)^2 k_{pw} \times 10^{-4}\right]$$

k_{pw}: Tortional buckling resistance constant (mm^2) according to **Table An2**.

m: Number of half-waves of tortional buckling taken as positive integer representing the lowest buckling stress

(4) Judgement of buckling

Judgement of buckling is to be made according to the following formula:

$max(\lambda_{SI}, \lambda_{PI}) = 1$

λ_{SI}: Stiffener side buckling criterion

$$\lambda_{SI} = \frac{\sigma_{xs} + \sigma_{bs} + \sigma_w}{\sigma_{YS}}$$

σ_{YS}: Specified minimum yield stress (N/mm^2) of stiffener

λ_{PI}: Plate side buckling criterion

$$\lambda_{PI} = \frac{\sqrt{(\sigma_{xp} + \sigma_{bp})^2 - (\sigma_{xp} + \sigma_{bp})\sigma_y{}' + \sigma_y{}'^2 + 3\tau'^2}}{\sigma_{YP}}$$

σ_{YP}: Specified minimum yield stress (N/mm^2) of plate

Table An2 Bending Rigidity of Stiffener Web

Stiffener type	Flat bars	Bulb plates, angles, L2, L3 and T-sections
k_{pw}	$\frac{{t_p}^3}{3b}$	$\left(\frac{3b}{{t_p}^3}+\frac{2h_w}{{t_w}^3}\right)^{-1}$

An2.1.2 Buckling Strength Assessment under Compressive Loads in Shorter Side Direction

1 The buckling utilisation factor η_s for the stiffened panel under compressive loads in the shorter side direction is to be obtained as follows:

$$\eta_s = \frac{1}{\gamma_c}$$

Where:

γ_c: Multiplier calculated using the method shown in **-2**

2 The minimum multiplier $\gamma_c(>0)$ that satisfies the buckling criteria obtained according to the procedure from the following **(1)** to **(4)** is to be obtained by iterative calculation. For the value of α_c, however, judgement of buckling is to be made for the two cases α and 1.

(1) Calculation of stresses and pressure for buckling strength assessment

$$\begin{bmatrix}\sigma_x{}' \\ \sigma_y{}' \\ \tau'\end{bmatrix} = \gamma_c \begin{bmatrix}\sigma_x \\ \sigma_y \\ \tau\end{bmatrix}$$

Where:

$\sigma_x{}'$, $\sigma_y{}'$, τ' : Stresses used for calculation of buckling criteria, multiplied by the multiplier.

(2) Calculation of buckling deflection w_t

The amplitude w_t (mm) of the buckling deflection generated when the compressive load in the shorter side direction is dominant is to be obtained by the following **(a)** or **(b)**:

(a)

$$w_t = \sqrt[3]{-f_b+\sqrt{{f_a}^3+{f_b}^2}}+\sqrt[3]{-f_b-\sqrt{{f_a}^3+{f_b}^2}} \qquad \text{for } {f_a}^3+{f_b}^2 \geq 0$$

(b)

$$w_t = 2\sqrt{-f_a}\cos\frac{\theta}{3} \quad \text{for} \quad {f_a}^3+{f_b}^2 < 0$$

Where:

$$f_a = -\frac{1}{3f_2}\left(f_1 + {w_{t0}}^2 f_2 - f_3\right)$$

$$w_{t0} = 0.005\beta^2 t_p \ (mm)$$

$$f_1 = \frac{\pi^2}{4}\left[\frac{\sigma_x{}'}{\alpha_c}+(2\alpha-\alpha_c)\sigma_y{}'\right]t_p \text{ in which } \alpha_c \text{ is taken as either } \alpha \text{ or } 1$$

$$f_2 = \frac{\pi^4 E}{64b^2}\left(3\alpha_c+\frac{1}{{\alpha_c}^3}-\frac{2}{\alpha}{\alpha_c}^2\right)t_p$$

$$f_3 = \frac{\pi^4 E}{48(1-\nu^2)b^2}\left(2\alpha-\alpha_c+\frac{2}{\alpha_c}+\frac{1}{{\alpha_c}^3}\right){t_p}^3 + \frac{k_w}{2b}\left\{\pi^2(2\alpha-\alpha_c)-16\alpha\left[1-0.2\left(\frac{\alpha_c}{\alpha}\right)^2\right]^2\frac{k_w}{EI_W\left(\frac{\pi}{\alpha b}\right)^4\times 10^6+\frac{EI_T}{2(1+\nu)}\left(\frac{\pi}{\alpha b}\right)^2\times 10^4+k_w}\right\}$$

$$f_b = -\frac{f_3}{2f_2}w_{t0}$$

$$\theta = \operatorname{arccot}\frac{-f_b}{\sqrt{-{f_a}^3-{f_b}^2}}$$

(3) Stresses generated by buckling deflection w_t

The stresses σ_{xb}, σ_{yb} (N/mm^2) and moment per unit length M_y (N) generated by buckling deflection are to be obtained as follows:

$$\sigma_{xb} = -({w_t}^2-{w_{t0}}^2)\frac{\pi^2 E}{8b^2{\alpha_c}^2}$$

$$\sigma_{yb} = ({w_t}^2 - {w_{t0}}^2)\frac{\pi^2 E(2\alpha - \alpha_c)}{8b^2\alpha}$$

$$\sigma_{yb2} = -({w_t}^2 - {w_{t0}}^2)\frac{\pi^2 E\alpha_c}{8b^2\alpha}$$

$$M_y = (w_t - w_{t0})\ \frac{\pi^2 E}{12b^2}{t_p}^3$$

(4) Judgement of buckling

Judgement of buckling is to be made according to the following formula:

$$\max(\lambda_a, \lambda_b) = 1$$

$$\lambda_a = \frac{\sqrt{(\sigma_x{}' + \sigma_{xb})^2 - (\sigma_x{}' + \sigma_{xb})(\sigma_y{}' + \sigma_{yb}) + (\sigma_y{}' + \sigma_{yb})^2 + 3\tau'^2}}{\sigma_{YP}}$$

$$\lambda_b = \sqrt{\frac{2Q_n + 2.75Q_m + 3|Q_{nm}| + \sqrt{0.25{Q_m}^2 + {Q_{nm}}^2}}{2}}$$

Where:

$$Q_n = {n_x}^2 - n_x n_y + {n_y}^2 + 3{n_{xy}}^2$$

Where:

$n_x = \frac{\sigma_x{}'}{\sigma_{YP}}$, $n_y = \frac{\sigma_y{}' + \sigma_{yb2}}{\sigma_{YP}}$ and $n_{xy} = \frac{\tau'}{\sigma_{YP}}$

$$Q_m = {m_y}^2$$

Where:

$$m_y = \frac{M_y}{M_p}$$

$$M_p = \frac{{t_p}^2}{4}\sigma_{YP}$$

$$Q_{nm} = m_y(n_y - 0.5n_x)$$

An2.1.3 Buckling Strength Assessment under Shear Loads

The buckling utilisation factor η_τ under shear loads is to be obtained as follows:

$$\eta_\tau = \sqrt{\frac{1}{{\sigma_{YP}}^2}({\sigma_x}^2 - \sigma_x\sigma_y + {\sigma_y}^2 + 3\tau^2) + \left(\frac{\tau_b}{\tau_{eb}}\right)^2}$$

Where:

$\tau_b = |\tau| + 0.5(\sigma_x + \sigma_y) \geq 0$ (*N/mm*²)

τ_{eb}: Elastic shearing buckling stress (*N/mm*²)

$$\tau_{eb} = \left(5.34 + \frac{4}{\alpha^2}\right)\frac{\pi^2 E}{12(1-\nu^2)}\left(\frac{t_p}{b}\right)^2$$

An2.1.4 Overall Buckling Strength Assessment for Stiffened Panels

The utilisation factor η_g of overall buckling of the stiffened panel under compressive loads in the shorter side direction is to be obtained as follows:

$$\eta_g = \frac{\sigma_y}{\sigma_{GL}}$$

Where:

σ_{GL}: Overall buckling stress (*N/mm*²) of the stiffened panel

$$\sigma_{GL} = \frac{\pi^2}{{n_{bm}}^2{l_b}^4{b_{GL}}^2 t_p}\left[D_p({n_{bm}}^4{l_b}^4 + 2{n_{bm}}^2{l_b}^2{b_{GL}}^2) + \frac{1}{s}EI_b{b_{GL}}^4 \times 10^4\right]$$

$b_{GL} = (n_{st} + 1)s(mm)$

n_{st}: Number of stiffeners for the stiffened panel under consideration. In principle, this is to be taken as five, but the actual quantity may be used when the actual number of stiffeners for the stiffened panel is less than five.

D_p: Flexural rigidity (*N-mm*) of the plate

$$D_p = \frac{E{t_p}^3}{12(1-\nu^2)}$$

n_{bm}: Number of buckling half waves in the normal direction to the stiffener, which is an integer from one to the number

of stiffeners n_{st} at which overall buckling stress σ_{GL} (N/mm^2) takes its minimum value.

s: Spacing (mm) between stiffeners, to be taken as the maximum spacing when the spacing is not the same in the panel.

I_b: Moment of inertia (cm^4) per one stiffener.

l_b: Effective buckling length (mm) of the stiffener

$l_b = 0.8l$ for cases where a sufficiently rigid structure is provided at both ends of the stiffener or both ends of the stiffener are firmly fixed by brackets

$l_b = 0.9l$ for cases where a sufficiently rigid structure is provided at one end of the stiffener or one end of the stiffener is firmly fixed by a bracket, or the stiffener is a hold web frame of a chip carrier

$l_b = l$ for all other cases

An2.2 Buckling Strength Assessments for Plate Panels

An2.2.1 Buckling Strength Assessment under Compressive Loads in Longer Side Direction

1 The buckling utilisation factor η_l for the stiffened panel under compressive loads in the longer side direction is to be obtained as follows:

$$\eta_l = \frac{1}{\gamma_c}$$

Where:

γ_c: Multiplier calculated by the method shown in **-2**

2 The minimum multiplier $\gamma_c (> 0)$ that satisfies the buckling criteria calculated according to the procedure from the following **(1)** to **(4)** is to be obtained by iterative calculation.

(1) Calculation of stresses and pressure for buckling strength assessment

$$\begin{bmatrix} \sigma_x' \\ \sigma_y' \\ \tau' \end{bmatrix} = \gamma_c \begin{bmatrix} \sigma_x \\ \sigma_y \\ \tau \end{bmatrix}$$

σ_x', σ_y', τ': Stresses used for calculation of buckling criteria, multiplied by the multiplier.

(2) Calculation of buckling deflection w_l (mm)

Amplitude of the buckling deflection w_l generated when the compressive load in the longer side direction is dominant is to be obtained according to **An2.1.1-2(2). However,** f_2 and f_3 are to be obtained as follows.

$$f_2 = \frac{\pi^4 E}{32b^2} t_p$$

$$f_3 = \frac{\pi^4 E}{12(1-\nu^2)b^2} {t_p}^3$$

(3) Calculation of stresses generated by buckling deflection

Stresses (N/mm^2) generated by buckling deflection σ_{xb}, σ_{yb} and the moment (N) per unit length M_x are to be obtained as follows

$$\sigma_b = ({w_l}^2 - {w_{l0}}^2)\frac{\pi^2 E}{8b^2}$$

$$M_b = (w_l - w_{l0})\frac{\pi^2 E}{12b^2}{t_p}^3$$

(4) Judgement of buckling

Judgement of buckling is to be made according to the following formula:

$$\max(\lambda_a, \lambda_b) = 1$$

$$\lambda_a = \frac{\sqrt{(\sigma_x' + \sigma_b)^2 - (\sigma_x' + \sigma_b)(\sigma_y' - \sigma_b) + (\sigma_y' - \sigma_b)^2 + 3\tau'^2}}{\sigma_{YP}}$$

$$\lambda_b = \sqrt{\frac{2Q_n + 2.75Q_m + 3|Q_{nm}| + \sqrt{0.25{Q_m}^2 + {Q_{nm}}^2}}{2}}$$

Where:

$$Q_n = {n_x}^2 - n_x n_y + {n_y}^2 + 3{n_{xy}}^2$$

Where:

$n_x = \frac{\sigma_x' - \sigma_b}{\sigma_{YP}}$, $n_y = \frac{\sigma_y' - \sigma_b}{\sigma_{YP}}$ and $n_{xy} = \frac{\tau'}{\sigma_{YP}}$

$$Q_m = {m_b}^2$$

Where:

$m_b = \frac{M_b}{M_p}$

$M_p = \frac{t_p^2}{4}\sigma_{YP}$

$Q_{nm} = 0.5m_b(n_x + n_y)$

An2.2.2 Buckling Strength Assessment under Compressive Loads in Shorter Side Direction

The buckling utilisation factor η_s under compressive loads in the shorter side direction is to be taken according to **An2.1.2**. However, f_3 is to be obtained as follows.

$$f_3 = \frac{\pi^4 E}{48(1-\nu^2)b^2}\left(2\alpha - \alpha_c + \frac{2}{\alpha_c} + \frac{1}{\alpha_c^3}\right)t_p^3$$

An2.2.3 Buckling Strength Assessment under Shear Loads

The buckling utilisation factor η_τ under shearing loads is to be taken according to **An2.1.3**.

An2.3 Panels with Openings

An2.3.1 Buckling Strength Assessments for Panels with Openings

Buckling strength assessments of panels with openings that constitute principal supporting members are to be performed in consideration of the combination of axial compressive stress in the span direction of the principal supporting member and shear stress either as the entire panel itself or as divided plate panels, depending on the arrangement of the reinforcements adjacent to the opening.

An2.3.2 When No Reinforcement is Provided Adjacent to Openings

1 In the case of panels where no reinforcement is provided adjacent to their openings (as shown in **Table An3**), the panel is to be treated as two separate plate panels (panels P1 and P2) at the opening of the original panel, and the height of each separate panels is to be taken as twice its actual height. Moreover, the buckling utilisation factor for each separate is to be obtained according to **An2.2**. In such cases, σ_{P1} σ_{P2}, τ_{P1} and τ_{P2} shown in the following **(1)** and **(2)** are to be considered as the reference stresses used in the buckling strength assessment.

(1) σ_{P1}, σ_{P2}: Average compressive stress ($\psi = 0$) (*N/mm*^{2}) acting on panels P1 and P2.

(2) τ_{P1}, τ_{P2}: Shear stress (*N/mm*^{2}) acting on the separate panels P1 and P2

$$\tau_{P1} = \tau_{P2} = \tau_{av}\frac{h}{h_1 + h_2}$$

whereτ_{av}: Average shear stress (*N/mm*^{2}) acting on the panel with the opening without considering the increase of stress due to said opening.

2 In addition to **-1** above, the buckling utilisation factor is to be obtained as follows in consideration of the entire original panel with the opening as shown in **Table An3**:

$$\eta_\tau = \sqrt{\frac{\sigma_{av}^2 + 3\tau_{av}^2}{\sigma_{YP}^2} + \left(\frac{\tau_b}{\tau_{eb}}\right)^2}$$

$\tau_b = |\tau_{av}| + 0.5\sigma_{av} \geq 0$ (*N/mm*^{2})

Where:

τ_{av}: According to **-1** above

σ_{av}: Average compressive stress (*N/mm*^{2}) acting on the entire panel with the opening

τ_{eb}: Elastic shear buckling stress (*N/mm*^{2}) in consideration of the effect of the opening is to be obtained as follows

$$\tau_{eb} = \gamma\left(5.34 + \frac{4}{\alpha^2}\right)\frac{\pi^2 E}{12(1-\nu^2)}\left(\frac{t_p}{b}\right)^2$$

Where:

γ: Reduction factor due to the opening

$$\gamma = \left[1 + \frac{h_0}{2h}\right]^{-2}$$

An2.3.3 When Reinforcement is Provided Adjacent to Openings

In the case of panels where reinforcement is provided adjacent to openings, panels P1 and P2 are to be treated as two separate plate panels divided by the reinforcements at the opening of the original panel (as shown in **Table An3**), and buckling strength assessments are to be performed according to **An2.2**. The reference stresses σ_{P1} σ_{P2} τ_{P1} and τ_{P2} used in the buckling strength assessment are to be taken according to **An2.3.2**.

Table An3 Buckling Strength Assessments for Panels with Openings

Reinforce -ment	Panel with opening	Panels to be assessed		
No opening	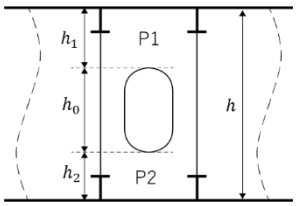	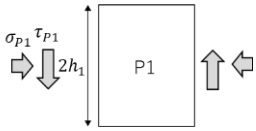	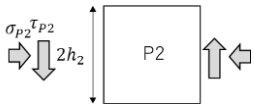	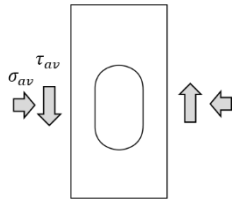
With opening	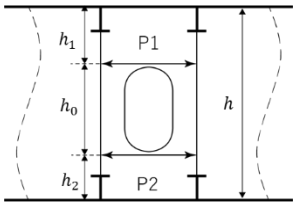		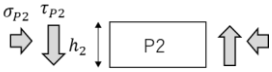	

An2.4 Corrugated Bulkheads

An2.4.1 Flange and Web Local Buckling

1 Buckling strength assessment of the panels of the flange and web of corrugated bulkheads is to be performed according to **An2.2**. In such cases, each panel is to be divided into smaller panels having an aspect ratio of 2 in which the short side of each smaller panel is equal to the width of the flange or web. Assessments of the smaller panels are to then be made using the thicknesses and stresses at their respective locations.

2 In the application of **-1** above, for local buckling under compressive loads in longer side direction of the flange of corrugated bulkheads, utilisation factor may be calculated by the following formulae instead of the assessment specified in **An2.2.1**. In this case, local buckling under compressive loads in shorter side direction specified in **An2.2.2** does not need to be assessed. Panel is to be divided in accordance with **-1** above.

$$\eta_l = \frac{\sigma_x}{\sigma_{cr_cor}}$$

σ_{cr_cor} : Critical buckling stress considering buckling of corrugated bulkhead (N/mm^2) is according to the following formula.

$$\sigma_{cr_cor} = \frac{2C_x}{C_x + 1}\sigma_{Yp}$$

C_x : According to the following formula.

$$C_x = \frac{2.25}{\beta} - \frac{1.25}{\beta^2}$$

An2.5 Struts, Pillars and Crossties

An2.5.1 Column Buckling

1 The buckling utilisation factor η_{cl} of members such as pillars and struts which are subjected to axial compressive loads is to be obtained as follows.

$$\eta_{cl} = \frac{F}{A\sigma_{cr}} \times 10^{-1}$$

Where:

A: Cross-sectional area (cm^2) of the member to be assessed

F: Compressive load (kN) acting on the member to be assessed in which. the compressive load acting at the centre of the member span is to be obtained based on cargo hold analysis.

σ_{cr}: Critical buckling stress (N/mm^2) of the pillar and strut

$$\sigma_{cr} = \sigma_Y\left(1 - \frac{\sigma_Y}{4\sigma_E}\right) \text{ for } \sigma_E > \frac{\sigma_Y}{2}$$

$$\sigma_{cr} = \sigma_E \text{ for } \sigma_E \leq \frac{\sigma_Y}{2}$$

2 The elastic buckling stress (N/mm^2) of the assessed member is to be the minimum of the buckling strength obtained by **(1)** through **(3)**.

(1) Column buckling stress σ_{EC} (N/mm^2) is to be obtained as follows:

$$\sigma_{EC} = C_{BC}\pi^2 E\frac{I_{n50}}{A\,l^2} \times 10^2$$

Where:

I_{n50}: Minimum moment of inertia (cm^4) of the member to be assessed

C_{BC}: Fixed end effect factor according to the following **(i)** through **(iii)**.

(i) $C_{BC} = 4$ when the boundary condition of both ends is fixed; however, when large bending moment is applied on the assessed member, the value in **(iii)** is to be taken.

(ii) $C_{BC} = 2$ when the boundary condition of one end is fixed and the other end is simply supported or crosstie

(iii) $C_{BC} = 1$ when the boundary condition of both ends is simply supported

l: Span (mm) of the assessed member

(2) Torsional buckling stress σ_{ET} (N/mm^2) is to be obtained as follows:

$$\sigma_{ET} = \frac{GI_T}{I_p} + C_{BC}\frac{\pi^2 E I_w}{I_p l^2} \times 10^2$$

Where:

I_T: Saint Venant's torsion constant (cm^4) for the assessed member

I_P: Polar moment of inertia of the assessed member (cm^4)

I_w: Sectional moment of inertia (cm^6) of the assessed member

(3) When the position of the centre of gravity of the cross section of the assessed member does not coincide with the shear centre, the interactive mode of column buckling and torsional buckling is to be considered. The buckling stress σ_{ETF} (N/mm^2) for this mode is to be obtained as follows:

$$\sigma_{ETF} = \frac{1}{2\zeta}\left[(\sigma_{EC} + \sigma_{ET}) - \sqrt{(\sigma_{EC} + \sigma_{ET})^2 - 4\zeta\sigma_{EC}\sigma_{ET}}\right]$$

Where:

$$\zeta = 1 - \frac{({y_0}^2 + {z_0}^2)A}{I_p}$$

y_0: Distance (cm) in the y-axis direction from the centre of gravity of the cross section to the shear centre.

z_0: Distance (cm) in the z-axis direction from the centre of gravity of the cross section to the shear centre.

An2.6 Principal Supporting Member Webs Penetrated by Stiffeners

An2.6.1 Equivalent Panel Assessment Method

Plate panels for principal supporting member webs penetrated by stiffeners may be assessed as the equivalent panel, as shown in **Fig. An1**.

Fig. An1 Principal Supporting Member Webs Penetrated by Stiffeners

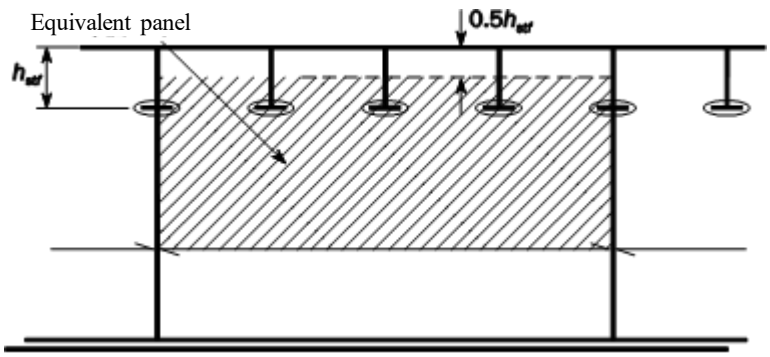

An3. Idealization for Buckling Strength Assessments

An3.1 Idealization of Dimensions and Yield Strength

An3.1.1 Average Panel Thickness

When panel thickness is not uniform for the entire panel, the panel thickness t_p (mm) used in buckling strength assessments is to be obtained as follows:

$$t_p = \frac{\sum_1^n A_i t_i}{\sum_1^n A_i}$$

Where:

A_i: i-th element area (mm^2)

t_i: i-th element thickness (mm)

n: Number of elements constituting the panel

However, buckling strength assessments are to be carried out for each respective thickness of the panel in the case of corrugated bulkheads.

An3.1.2 Panel Yield Stress

Panel yield stress is to be taken as the smallest of the specified minimum yield stresses of the panel elements.

An3.2 Reference Stress for Buckling Strength Assessments

An3.2.1 Reference Stress in Longer Side Direction

The reference stress σ_x (N/mm^2) in the longer side direction is to be obtained as follows:

$$\sigma_x = \frac{\sum_1^n A_i \sigma_{xi}}{\sum_1^n A_i}$$

Where:

A_i: i-th element area (mm^2).

σ_{xi}: Normal stress (N/mm^2) in the i-th element longer side direction

n: Number of elements constituting the panel

An3.2.2 Reference Stress in Shorter Side Direction

The reference normal stress σ_y (N/mm^2) in the shorter side direction is to be obtained as follows:

$$\sigma_y = \frac{2+\psi_y}{3}\max(\sigma_{y1}, \sigma_{y2}) \quad \text{for } 0 \le \psi_y \le 1$$

$$\sigma_y = \frac{2}{3-2\psi_y}\max(\sigma_{y1}, \sigma_{y2}) \quad \text{for } \psi_y < 0$$

Where:

$$\sigma_{y1} = \frac{\sum_1^n A_i\sigma_{yi}\sum_1^n A_i x_i^2 - \sum_1^n A_i x_i \sum_1^n A_i x_i \sigma_{yi}}{\sum_1^n A_i \sum_1^n A_i x_i^2 - (\sum_1^n A_i x_i)^2} \ (N/mm^2)$$

$$\sigma_{y2} = \frac{a(\sum_1^n A_i \sum_1^n A_i x_i \sigma_{yi} - \sum_1^n A_i x_i \sum_1^n A_i \sigma_{yi})}{\sum_1^n A_i \sum_1^n A_i x_i^2 - (\sum_1^n A_i x_i)^2} + \sigma_{y1} \ (N/mm^2)$$

Where:

A_i: i-th element area (cm^2)

σ_{yi}: Normal stress (N/mm^2) in i-th element short side direction

x_i: Distance (mm) from one end of the short side to the i-th element centre as shown in **Fig. An2**

n: Number of elements constituting the panel

ψ_y: Factor indicating the stress gradient

$$\psi_y = \frac{\min(\sigma_{y1}, \sigma_{y2})}{\max(\sigma_{y1}, \sigma_{y2})} \quad \text{for } \max(\sigma_{y1}, \sigma_{y2}) \ge 0$$

$$\psi_y = 1 \quad \text{for } \max(\sigma_{y1}, \sigma_{y2}) < 0$$

An3.2.3 Shearing Stress of Panels

Shearing stress τ (N/mm^2) is to be obtained as follows:

$$\tau = \frac{\sum_1^n A_i \tau_i}{\sum_1^n A_i} \ (N/mm^2)$$

Where:

A_i: i-th element area (mm^2)

τ_i: i-th element shearing stress (N/mm^2).

n: Number of elements constituting the panel

An3.3 Idealization of Out-of-Plane Loads

An3.3.1 Lateral Loads Acting on Panels

When the lateral load is not uniform for the entire panel, the lateral load P (kN/m^2) used in buckling strength assessments is to be obtained as follows:

$$P = \frac{\sum_1^n A_i P_i}{\sum_1^n A_i}$$

Where:

A_i: i-th element area (mm^2)

P_i: i-th element lateral load (kN/m^2)

n: Number of elements constituting the panel.

Fig. An2 Buckling Panel Coordinate System

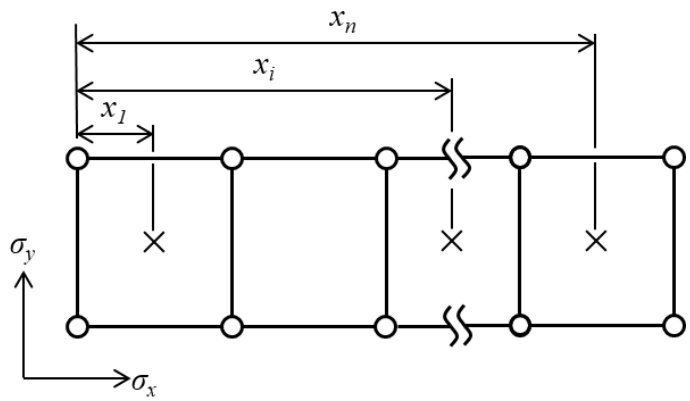

An4. Alternative Methods

An4.1 General

An4.1.1

When deemed appropriate by the Society, the ultimate strength of individual structural members in consideration of elastic buckling strength and the load carrying capacity after elastic buckling may be obtained by an alternative method such as non-linear finite element analysis.

An4.2 Non-linear Finite Element Analysis

An4.2.1

When the strength of individual structural members is to be assessed by non-linear finite element analysis, the following important influencing factors in the non-linear structural response are to be considered with respect to modeling.

(1) Geometrical non-linear behavior

(2) Non-linear behavior of the material

(3) Initial irregularities (initial deflection of the plate and stiffener)

(4) Combined loads

(5) Boundary conditions

(6) Correlation between buckling modes

(7) Correlation between structural members such as plates, stiffeners, and girders

(8) Load carrying capacity after buckling

An4.2.2

Special attention is required with respect to modeling the geometry and magnitude of initial deformation. It is to be confirmed that the geometry and magnitude of an initial deformation is the factor of the most dominant collapse mode.

Annex 8.6A STRENGTH ASSESSMENT CONSIDERING EFFECT OF SURROUNDING STRUCTURES

Symbols

t_p: Net thickness (mm) of the plating

σ_{elem_y}: Normal stress (N/mm^2) applied on the elements adjacent to the shorter side of the target plating, which is the stress in the shorter side direction of the plating, obtained from cargo hold analysis without consideration for any rigidity reduction

E_{bl}: Apparent modulus of elasticity (N/mm^2) after elastic buckling

σ_{US}: Buckling stress (N/mm^2) of the panel under compressive loads in the shorter side direction of the panel

σ_{el-bl}: Elastic buckling stress (N/mm^2) of the panel under compressive loads in the shorter side direction of the panel

σ_{eval}: Evaluation stress (N/mm^2) considering the ratio of deformation increase, as specified in **An2.5**

σ_Y: Specified minimum yield stress (N/mm^2) of the plate under consideration

An1. General

An1.1 General

An1.1.1 Overview

1 This Annex specifies a strength assessment method for a member to be assessed whose surrounding members are expected to withstand compressive loads instead of the member to be assessed where elastic buckling of the member occurs. Through this method, strength assessment is carried out in consideration of withstanding loads by the surrounding structures instead of a member to be assessed by calculating the stress and strain act on their structures after elastic buckling occurs at a part of the structure, taking the reduction of rigidity after the phenomena into account.

2 The method specified in this Annex can be applied only to stiffened panels and plate panels to which compressive stress in the shorter side direction of the panels is dominant.

3 In this Annex, compressive stress is taken as positive for σ_{elem_y} and σ_{eval}.

4 The strength assessment specified in this Annex is to be carried out for each member to be assessed.

An2. Strength Assessment Method Considering the Effect of the Surrounding Structures

An2.1 Outline

An2.1.1

The procedure of the strength assessment considering the effect of the surrounding structures is shown in **Fig. An1**.

Fig. An1 Assessment Procedure

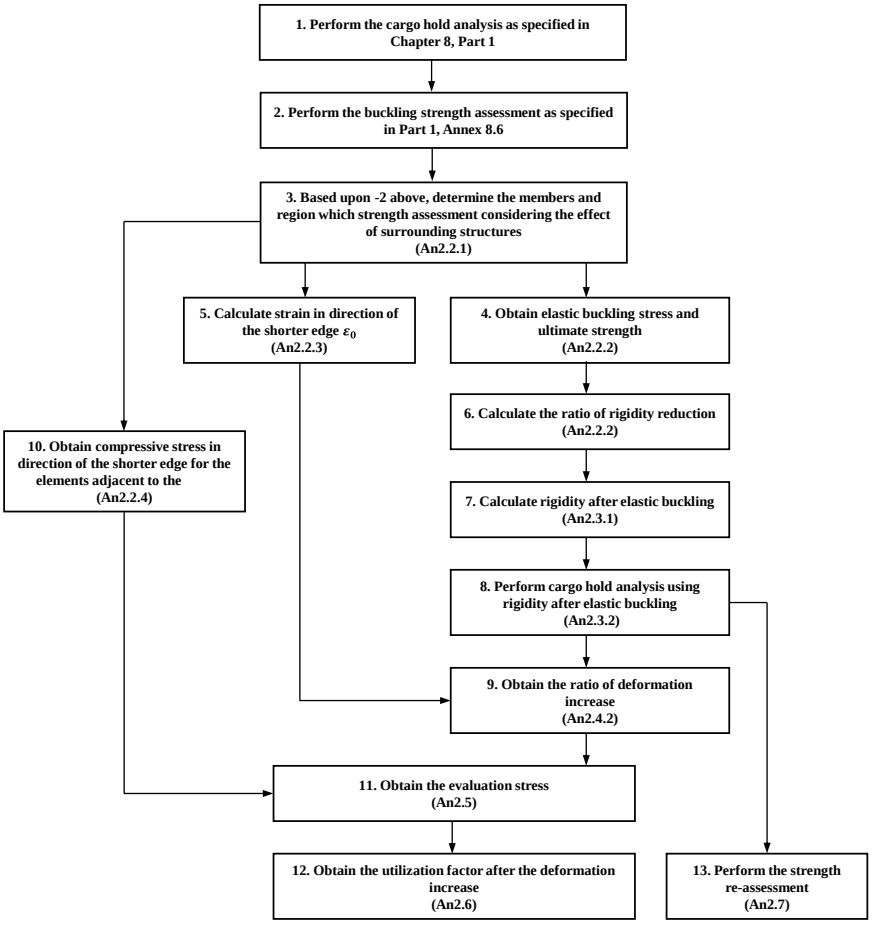

Note: Numbers in parentheses indicate corresponding section number.

An2.2 Selection of Region of Rigidity Reduction and Ratio of Rigidity Reduction

An2.2.1 Region of Rigidity Reduction

All elements forming stiffened panels and plate panels of members for which the buckling utilisation factor exceeds 1.0 in buckling strength assessments of the shorter side direction specified in **Annex 8.6** and elements in the region where the similar deformation behavior to the above occurs are to be taken as the region of rigidity reduction. An example where side shell is selected as the target for this assessment is shown in **Fig. An2**. Compressive stress applied on the elements adjacent to the shorter side of theses stiffened and plate panels, which is in the shorter side direction of the panels, is to be obtained.

Fig. An2 Region of Rigidity Reduction (In the Case of Side Shell)

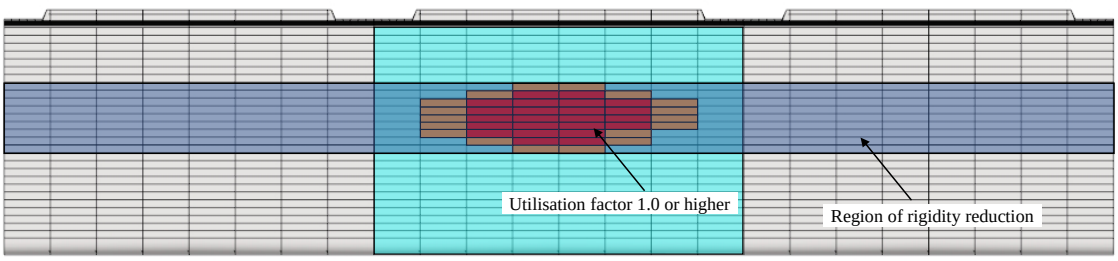

An2.2.2 Ratio of Rigidity Reduction

The ratio of rigidity reduction γ_{bl} is to be obtained from the following formula for all stiffened panels and plate panels in the region of rigidity reduction.

$$\gamma_{bl} = \frac{\sigma_{US} - \sigma_{el-bl}}{\sigma_Y - \sigma_{el-bl}}$$

σ_{US}: Value (N/mm^2) where the evaluation stress in the shorter side direction in **Annex 8.6, Chapter 8** is multiplied by the

multiplier when the buckling criterion given in **An2.1.2-2(1), Annex 8.6, Chapter 8** is taken as 1.0.

σ_{el-bl}: Elastic buckling stress (N/mm^2), as given by the following formula.

$$\sigma_{el-bl} = \left(\frac{l}{s}+\frac{s}{l}\right)^2 \frac{\pi^2 E}{12(1-\nu^2)}\left(\frac{t_p}{l}\right)^2$$

s: Width (mm) of the plate panel, to be taken as stiffener spacing.

l: Length (mm) in the longer side direction of the panel.

An2.2.3 Strain in Evaluation Area

ε_0, strain in the shorter side direction of the panels for all elements in the region of rigidity reduction, is to be obtained.

An2.2.4 Stress in Evaluation Area

σ_{elem_y}, stress in the shorter side direction of the panels, is to be obtained for the elements adjacent to the shorter side of stiffened and plate panels for which the buckling utilisation factor exceeds 1.0 in buckling strength assessments of the shorter side direction.

An2.3 Cargo Hold Analysis Considering Rigidity Reduction

An2.3.1 Rigidity after Elastic Buckling

The rigidity after elastic buckling is to be obtained from the following formula:

$$E_{bl} = \gamma_{bl_imn} E$$

γ_{bl_min}: Minimum value of the ratio of rigidity reduction γ_{bl} for the panels calculated in **An2.2.2**.

An2.3.2 Cargo Hold Analysis Considering Rigidity Reduction

Cargo hold analysis is to be performed replacing Young's modulus of all elements in the region of rigidity reduction with E_{bl} obtained in accordance with **An2.3.1**.

An2.4 Calculation of Ratio of Deformation Increase

An2.4.1 Calculation of Strain at the Location to be Assessed

ε_1, strain in the shorter side direction of stiffened panels and plate panels, is to be obtained for the elements adjacent to the shorter side in the region of rigidity reduction, by the analysis in accordance with **An2.3.2**. However, ε_1 is not to be taken as more than 0.

An2.4.2 Ratio of Deformation Increase

The ratio of deformation increase γ_{def} is to be obtained from the following formula:

$$\gamma_{def} = \frac{\varepsilon_1}{\varepsilon_0}$$

An2.5 Evaluation stress

An2.5.1

The evaluation stress σ_{eval} is to be calculated for the elements adjacent to the shorter side of the panels in the region of rigidity reduction in accordance with the following formula, using σ_{elem_y} specified in **An2.2.4** and the ratio of deformation increase obtained in accordance with **An2.4.2:**

$$\sigma_{eval} = \sigma_{el-bl} + \gamma_{def}\left(\sigma_{elem_y} - \sigma_{el-bl}\right)$$

An2.6 Utilisation Factor after Deformation Increase

An2.6.1

The utilisation factor after deformation increase η_{def} is to be obtained from the following formula:

$$\eta_{def} = \frac{\sigma_{eval}}{\sigma_Y}$$

An2.7 Strength Assessments of Surrounding Structures after Rigidity Reduction

An2.7.1

1 The yield strength and buckling strength assessments are to be performed for the region other than the region of rigidity reduction determined in **An2.2.1**, based upon stress obtained from finite element analysis in consideration of the rigidity reduction specified in An2.3.2. The buckling strength assessment is to be accordance with **Annex 8.6 "Buckling Strength Assessment based on Cargo Hold Analysis"**.

2 In application of **-1** above, the strength assessments may be omitted for elements and panels to which the appropriate strength assessment is not applicable.

3 In application of **-1** above, the strength assessment based upon the requirements of **An2.2** to **An2.6** is not to be carried out for the region other than the region of rigidity reduction.

Chapter 9 FATIGUE

Symbols

For symbols not specified in this Chapter, refer to **1.4.**

T_{FD}: Fatigue design life (years) specified by the designer, but not to be taken less than 25 *years*.

9.1 General

9.1.1 Overview

9.1.1.1

1 This Chapter specifies the requirements for fatigue strength assessments as shown in **Table 9.1.1-1**.

2 **Fig. 9.1.1-1** shows the flowchart of fatigue strength assessment.

Table 9.1.1-1 Overview of Chapter 9

Section	Title	Overview
9.1	General	Application and assumptions, etc. of fatigue strength assessment
9.2	Hot Spots To Be Assessed	Requirements for the hot spots where fatigue strength is to be assessed
9.3	Simplified Stress Analysis	Requirements for derivation of the hot spot stress of the parts where longitudinals penetrate transverse girder and bulkheads
9.4	Finite Element Analysis	Requirements for derivation of the hot spot stress in connections of platings and girders
9.5	Fatigue Strength Assessment	Requirements for the method for fatigue strength assessment using hot spot stress
9.6	Detail Design Standards	Requirements for detail design standards of welded joints where load is carried to the weld
9.7	Fatigue Strength Assessment of Weld Root	Requirements for fatigue strength assessment of weld roots

Fig. 9.1.1-1 Fatigue Strength Assessment Flowchart

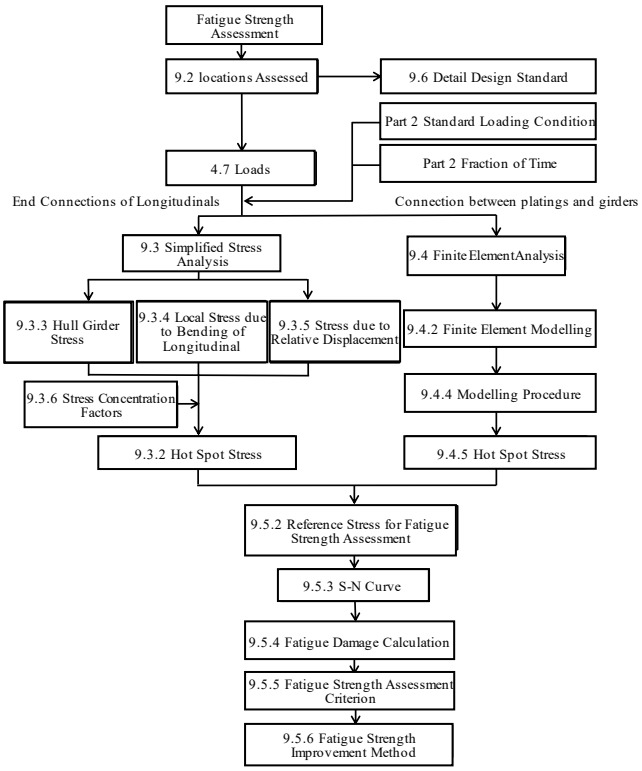

9.1.2 Application of Fatigue Strength Assessment

9.1.2.1 General

1 This Chapter provides the requirements for fatigue strength assessment of hot spots specified in **9.2** assuming an operating period equal to the fatigue design life T_{FD} of the ship.

2 Worldwide loads are to be used as the standard fatigue load in fatigue strength assessments. Worldwide loads are the loads considering operation in severe sea states, such as in the North Atlantic Ocean, considering the routing effect and operating effect.

3 Notwithstanding the requirement in **-2** above, for the ships designed for operation principally in severe sea states, fatigue strength assessment is to be conducted using the North Atlantic Ocean loads.

4 Fatigue strength assessment is to be conducted for hot spots in the cargo region to prevent fatigue damage in the welds and free edges of structural members.

9.1.2.2 Application*

1 Fatigue strength assessment is to be conducted for the following ships **(1)** to **(3)** based on the hot spot stress obtained by the simplified stress analysis in **9.3**.

(1) Ships for which fatigue strength assessment is required in **Part 2**

(2) Ships for which the class notation "PS-FA" is affixed to classification characters

(3) Ships for which fatigue strength assessment is deemed necessary by the Society

2 Fatigue strength assessment is to be conducted for the following ships **(1)** to **(3)** below based on the hot spot stress obtained by the finite element analysis in **9.4**.

(1) Ships for which fatigue strength assessment is required in **Part 2**

(2) Ships for which the class notation "PS-FA" is affixed to classification characters

(3) Ships for which fatigue strength assessment is deemed necessary by the Society

9.1.2.3 Hot Spots To Be Assessed

1 Hot spots where fatigue strength assessment is required are as given in **9.2.**

2 Hot spots to be assessed by the simplified stress analysis specified in **9.3** are as given in **9.2.1**.

3 Hot spots to be assessed by the finite element analysis specified in **9.4** are as given **9.2.2**.

4 Notwithstanding the requirements in **-1** to **-3** above, the hot spots to be assessed may be added when deemed necessary by the

Society.

9.1.2.4 Detail Design Standards

The requirements for preventing fatigue damage of critical load carrying welded joints are specified as detail design standards in 9.6.

9.1.2.5 Material

The fatigue strength assessment specified in this Chapter is to be applied to rolled steels for hull as specified in **Chapter 3**, **Part K**. Materials other than rolled steels for hull specified in **Chapter 3**, **Part K** and special materials such as fatigue resistant steel and corrosion resistant steel are to be at the Society's discretion.

9.1.2.6 Wave Loads

1 Fatigue strength assessment is to be conducted based on the equivalent design wave specified in **Chapter 4**.

2 Fatigue strength assessment considering whipping and springing is to be as given in 9.5.4.2.

9.1.2.7 Fatigue Strength Under Impact Loads, Low Cycle Loads and Vibration

Fatigue strength under the impact load such as sloshing in partially filled tanks, low cycle loads due to change of loading conditions and vibration are not considered in this Chapter.

9.1.3 Definitions

9.1.3.1 Hot Spot

Hot spots are locations where fatigue cracks may initiate due to the combined effect of structural stress fluctuation and local stress concentration, such as the weld toe in way of structural stress concentration areas caused by structural discontinuities and welded attachment, the weld root of partial penetration or fillet welds and the free edge of structural members.

9.1.3.2 Nominal Stress

Nominal stress is the normal stress in a structural component taking into account the macro-geometrical effect of the structure but disregarding the stress concentration due to structural discontinuities and the presence of welds.

9.1.3.3 Hot Spot Stress

Hot spot stress is the stress at the position of the hot spot which considers the stress concentration, but disregards the local stress concentration caused by welds in welded joints. Hot spot stress is to be calculated by multiplying the nominal stress by a Stress Concentration Factor (*SCF*) according to 9.3, or by a very fine mesh finite element analysis using very fine mesh according to 9.4.

9.1.3.4 Equivalent Stress Range

The equivalent stress range is the stress range taking into account the effects of the mean stress including residual stress, in the components of the principal stress normal to or parallel to the weld line.

9.1.4 Assumptions

9.1.4.1 General

The following assumptions **(1)** to **(9)** are made in the fatigue strength assessment specified in this Chapter.

(1) A linear cumulative damage model (i.e. Miner's rule) given in 9.5.5 is used in the calculation of fatigue damage.

(2) Fatigue design life T_{FD} is taken not less than 25 *years*.

(3) Rule quasi-static wave loads are determined at the 10^{-2} probability level of exceedance by the Equivalent Design Wave (*EDW*) concept.

(4) Stresses are assessed by the net scantlings t_{n25}, according to 9.3 and 9.4.

(5) Hot spot stress is used for fatigue strength assessment of weld toes and the free edge of members, and the effective notch stress is used for fatigue strength assessment of the weld root.

(6) Excluding exceptional cases, fatigue strength assessment of welds is made for the weld toe. For the welded joints where loads are carried to the weld, the assessment is to be in accordance with 9.1.4.2, 9.1.4.3 or 9.7.

(7) The design *S-N* curve at two standard deviations below the mean *S-N* curve is used. The *S-N* curve in the in-air environment is used for the period when the coating at the location being assessed is effective and the *S-N* curve in the corrosive environment is used for the period when the effectiveness of the coating is lost.

(8) The long-term distribution of the stress range for wave loads is assumed to follow an exponential distribution.

(9) The acceptance criterion for fatigue strength assessment is given in 9.5.5.

9.1.4.2 Positions Where Full Penetration Weld Is Required

Full penetration welding is to be applied at positions in the following **(1)** to **(4)** in consideration of fatigue strength.

(1) Butt welds of longitudinal hull girder structural members

(2) Connections of the floor and bilge hopper plating or inner bottom plating in radiused bilge hopper knuckle parts

(3) Connections of the corrugated bulkhead and the top plate of the lower stool or the inner bottom plating, specified in Table 12.2.2-1

(4) High stress concentration locations as deemed appropriate by the Society

9.1.4.3 Positions Where Full Penetration Weld or Partial Penetration Weld Is Required

1 For welded joints where loads are carried to welds and the fatigue strength assessment is required in Part 2, full penetration welding or partial penetration welding is to be applied in consideration of fatigue strength.

2 Notwithstanding the requirement in **-1** above, fillet welds may be used in the case where a fatigue strength assessment of the weld root specified in 9.7 is conducted and the relevant criteria are satisfied.

9.1.5 Fatigue Strength Assessment Method

9.1.5.1 General

1 Fatigue strength assessments of hot spots are to be made by a cumulative fatigue damage calculation (simplified stress analysis for hot spot stress, finite element analysis for hot spot stress or effective notch stress analysis of weld root).

2 Notwithstanding the requirement **-1** above, fatigue strength assessment may be omitted if the design is in accordance with the detail design standard.

9.1.5.2 Simplified Stress Analysis for Hot Spot Stress

1 The simplified stress analysis specified in 9.3 is used to determine the hot spot stress at the weld toe at the longitudinal end connections given in 9.2.1.

2 Hot spot stress is to be calculated by multiplying the nominal stress by the Stress Concentration Factor (*SCF*) of the hot spot of the detail under consideration, according to 9.3.2.

9.1.5.3 Finite Element analysis For Hot Spot Stress

1 The finite element analysis specified in 9.4 is used to determine the hot spot stress from very fine mesh models.

2 The hot spots where fatigue strength assessment by the very fine mesh finite element analysis is required are given in Part 2.

9.1.5.4 Fatigue Detail Design Standards

Detail design standards to ensure improved fatigue strength of hot spots are given in 9.6. Alternative detail design configurations may be accepted subject to demonstration of satisfactory fatigue strength by fatigue strength assessment.

9.1.6 Corrosion Model

9.1.6.1 Net Thickness

Fatigue strength assessment is to be conducted based on the net thickness t_{n25}.

9.1.7 Loading Conditions

9.1.7.1

1 Fatigue strength assessments are to be carried out for representative loading conditions according to the ship's intended operation and the fraction of time for each loading condition. The loading conditions to be considered in fatigue strength assessment are given in 4.7.2.1.

2 The draught and still water vertical bending moment in the loading conditions under consideration used in the fatigue strength assessment are, in principle, to be the values for departure conditions.

9.1.8 Loads

9.1.8.1 Assumptions

1 The loads to be considered in the fatigue strength assessment specified in this Chapter are given in 4.7.

2 To investigate the combinations of variable loads for the fatigue strength assessment, all wave conditions used in the fatigue strength assessment in each loading condition under consideration are to be taken into account.

9.2 Hot Spots To Be Assessed

9.2.1 Hot Spots to be Assessed by Simplified Stress Analysis

9.2.1.1

1 The fatigue strength of end connections of longitudinals to floors, transverse girders, and transverse bulkheads where fatigue

strength assessment is required under **Part 2** is to be carried out at the midship part of the cargo region by simplified stress analysis according to **9.3**.

2 If cargo holds beyond the midship part are included in the target hold selected according to **9.2.4**, the fatigue strength of those holds is also to be carried out.

3 When deemed necessary by the Society, the fatigue strength of parts beyond the midship part is also to be carried out.

9.2.2 Hot Spots to be Assessed by Finite Element Analysis

9.2.2.1

1 The fatigue strength of connection of platings and girders and the free edge of the base material where fatigue strength assessment is required under **Part 2** is to be checked by hot spot stress analysis by the finite element analysis according to **9.4**. The hot spots in general structural details are given in **Table 9.2.2-1** to **Table 9.2.2-12**.

2 For the structures deemed appropriate by the Society, the hot spots to be assessed may be added or reduced.

9.2.3 Structural Details According to Detail Design Standards

9.2.3.1

The detail design standards are given in **9.6.3** to **9.6.5**.

9.2.4 Target Hold for Fatigue Strength Assessment

9.2.4.1

The target hold for fatigue strength assessment is to be the same as that selected for cargo hold analysis according to **8.2.1.1-3**.

Table 9.2.2-1 Hot Spots for Welded Lower Hopper Knuckle Connection

Designation	Location	Member for stress measurement	Type of stress
HS1	Connection of inner bottom plating and bilge hopper plating	Inner bottom plating, on cargo tank side	**9.4.5.3-1(1)** Type a1-0
HS2	Connection of inner bottom plating and bilge hopper plating	Bilge hopper plating, on cargo tank side	
HS3-1	Connection of side girder and transverse girder	Transverse girder	**9.4.5.3-1(2)** Type a1-1
HS3-2	Connection of inner bottom plating and transverse girder	Transverse girder	
HS4-1	Connection of side girder and floor	Floor	
HS4-2	Connection of inner bottom plating and floor	Floor	
HS5-1	Connection of side girder and transverse girder / floor	Side girder	
HS5-2	Connection of inner bottom plating and side girder	Side girder	
HS5-3	Connection of side girder and transverse girder / floor	Side girder	
HS5-4	Connection of inner bottom plating and side girder	Side girder	
HS6	Connection of scarfing bracket and inner bottom plating	Inner bottom plating	**9.4.5.3-2(3)** Type b2-1

The frame position is generally located closest to the mid length of the hold. Where a swash bulkhead is fitted, this is generally located closest to the mid length between the swash bulkhead and the oil-tight bulkhead.

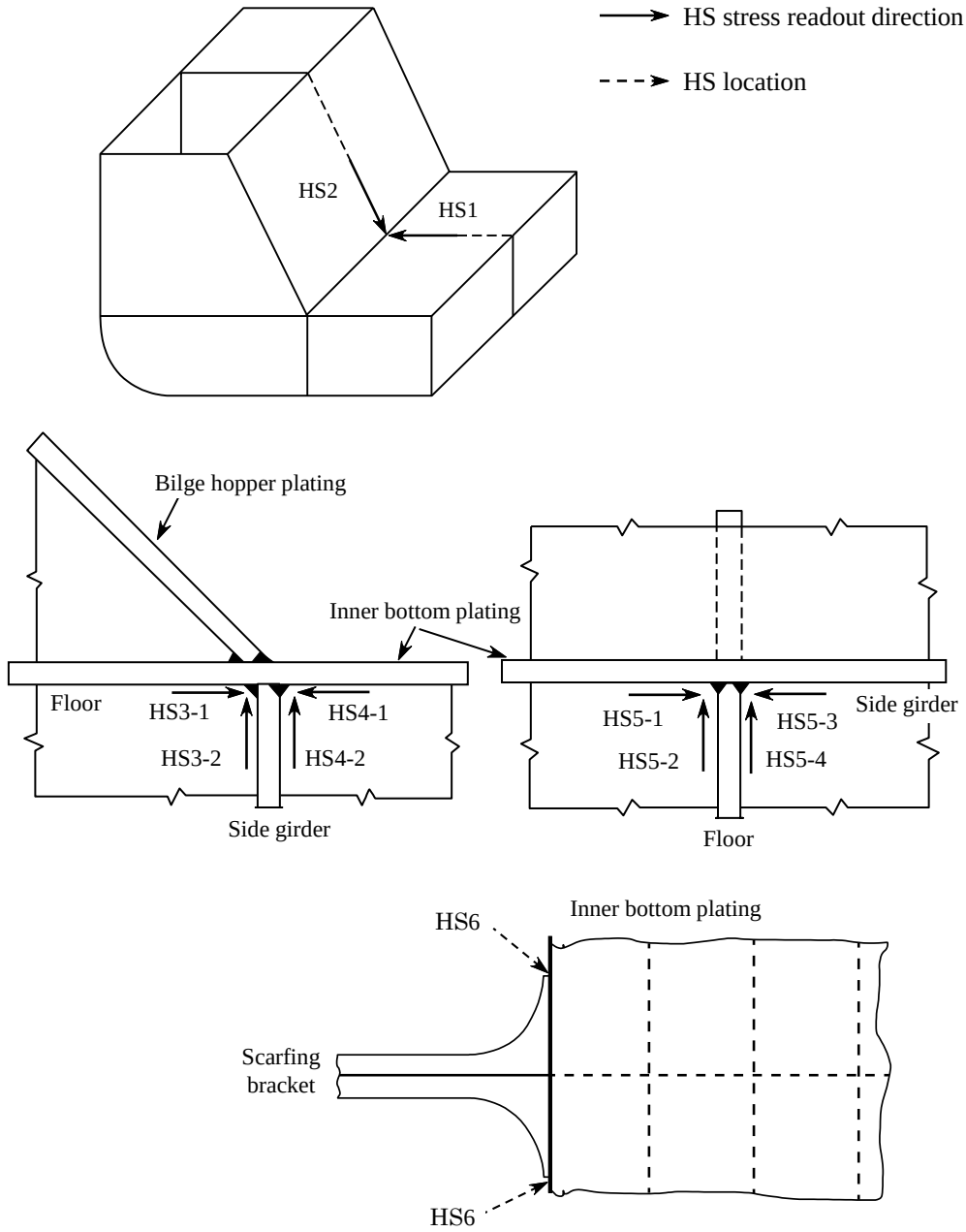

Table 9.2.2-2 Hot Spots of Radiused Lower Hopper Knuckle Connection

Designation	Location	Member for stress measurement	Type of stress
HS1	Connection of inner bottom plating and side girder	Inner bottom plating of double bottom tank side	9.4.5.3-1(1) Type a1-0
HS2	Connection of side girder and bilge hopper plating	Bilge hopper plating of double bottom tank side	
HS3	Connection of transverse girder and bilge hopper plating	Bilge hopper plating of double bottom tank side (Position where stress concentration is highest in way of transverse girder)	9.4.5.3-1(3) Type a1-2
HS4-1	Connection of side girder and transverse girder	Transverse girder	9.4.5.3-1(2) Type a1-1
HS4-2	Connection of inner bottom plating and transverse girder	Transverse girder	
HS5-1	Connection of side girder and floor	Floor	
HS5-2	Connection of inner bottom plating and floor	Floor	
HS6-1	Connection of side girder and transverse girder / floor	Side girder	
HS6-2	Connection of inner bottom plating and side girder	Side girder	
HS6-3	Connection of side girder and transverse girder / floor	Side girder	
HS6-4	Connection of inner bottom plating and side girder	Side girder	

The frame position is generally located closest to the mid length of the hold. Where a swash bulkhead is fitted, this is generally located closest to the mid length between the swash bulkhead and the oil-tight bulkhead.

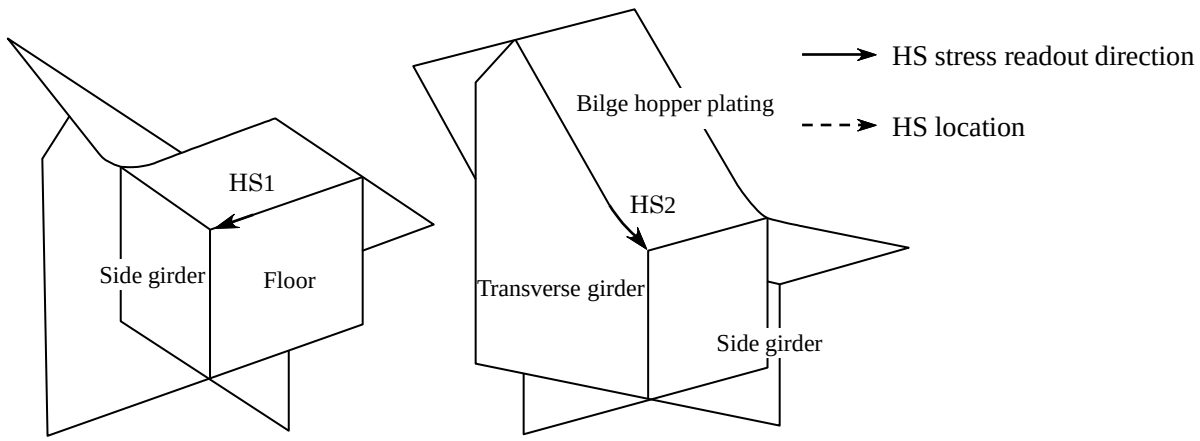

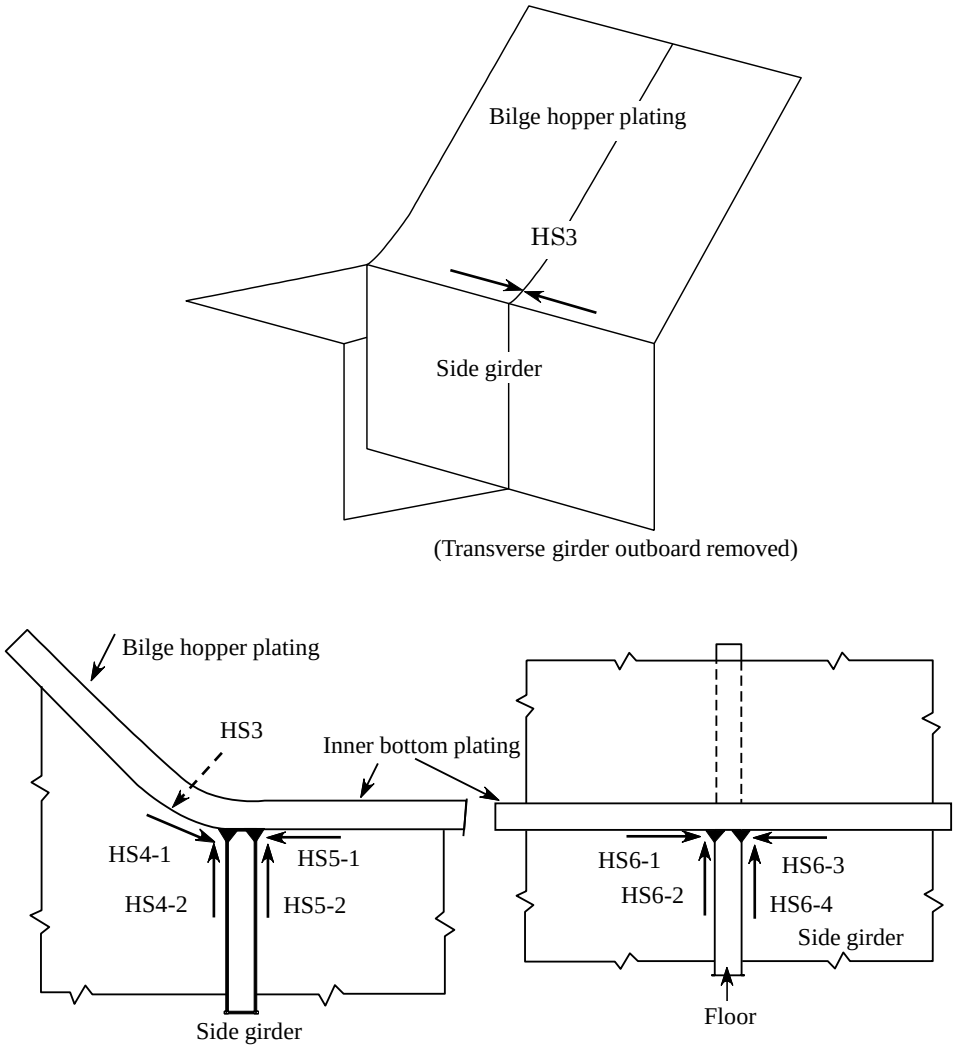
Bilge hopper plating
HS3
Side girder
(Transverse girder outboard removed)
Bilge hopper plating
HS3
Inner bottom plating
HS4-1
HS4-2
HS5-1
HS5-2
Side girder
HS6-1
HS6-2
HS6-3
HS6-4
Side girder
Floor

Table 9.2.2-3 Hot Spots for Welded Upper Knuckle Connection

Designation	Location	Member for stress measurement	Type of stress
HS1	Connection of inner longitudinal bulkhead and side stringer	Inner longitudinal bulkhead, on cargo hold side	9.4.5.3-1(1) Type a1-0
HS2	Connection of side stringer and bilge hopper plating	Bilge hopper plating, on cargo hold side	
HS3-1	Connection of transverse girder below stringer and bilge hopper plating	Transverse girder	9.4.5.3-1(2) Type a1-1
HS3-2	Connection of side stringer and transverse girder below stringer	Transverse girder	
HS4-1	Connection of transverse girder above stringer and inner longitudinal bulkhead	Transverse girder	
HS4-2	Connection of side stringer and transverse girder above stringer	Transverse girder	
HS5-1	Connection of inner longitudinal bulkhead and transverse girder above stringer	Inner longitudinal bulkhead (inner hull tank side)	
HS5-2	Connection of inner longitudinal bulkhead and side stringer	Inner longitudinal bulkhead (inner hull tank side)	
HS5-3	Connection of inner longitudinal bulkhead and transverse girder above stringer	Inner longitudinal bulkhead (inner hull tank side)	
HS5-4	Connection of inner longitudinal bulkhead and side stringer	Inner longitudinal bulkhead (inner hull tank side)	
The frame position is generally located closest to the mid length of the hold. Where a swash bulkhead is fitted, this is generally located closest to the mid length between the swash bulkhead and the oil-tight bulkhead.			

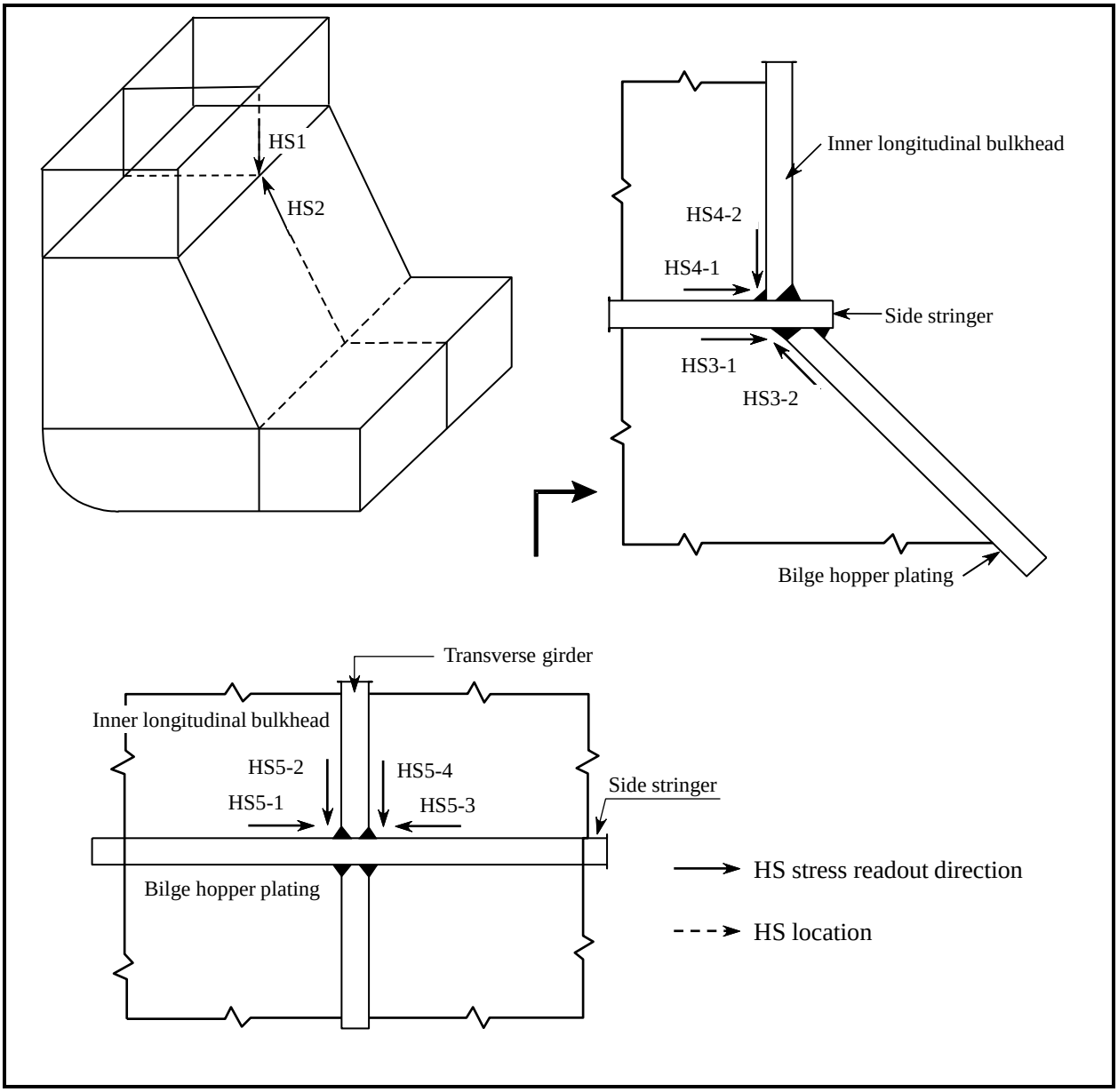
HS1
HS2
Inner longitudinal bulkhead
HS4-2
HS4-1
Side stringer
HS3-1
HS3-2
Bilge hopper plating
Transverse girder
Inner longitudinal bulkhead
HS5-2
HS5-4
HS5-1
HS5-3
Side stringer
Bilge hopper plating
HS stress readout direction
HS location

Table 9.2.2-4 Hot Spots for Connections of Transverse Bulkhead Lower Stools to Inner Bottom Plating in way of Double Bottom Girders

Designation	Location	Member for stress measurement	Type of stress
HS1	Connection of stool plating and inner bottom plating	Inner bottom plating, on cargo hold side	9.4.5.3-1(1) Type a1-0
HS2	Connection of stool plating and inner bottom plating	Stool plating, on cargo hold side	
HS3-1	Connection of side girder and floor under stool plating	Side girder	9.4.5.3-1(2) Type a1-1
HS3-2	Connection of inner bottom plating and side girder	Side girder	
HS4-1	Connection of side girder under stool plating and floor under stool plating	Side girder	
HS4-2	Connection of inner bottom plating and side girder under stool	Side girder	
HS5-1	Connection of side girder and floor under stool plating	Floor	
HS5-2	Connection of inner bottom plating and floor under stool plating	Floor	
HS5-3	Connection of side girder and floor under stool plating	Floor	
HS5-4	Connection of inner bottom plating and floor under stool plating	Floor	
The position is generally located closest to the mid breadth of the hold. Where more than one compartment is provided in the double bottom structure, the position is to be the boundary of the compartment.			

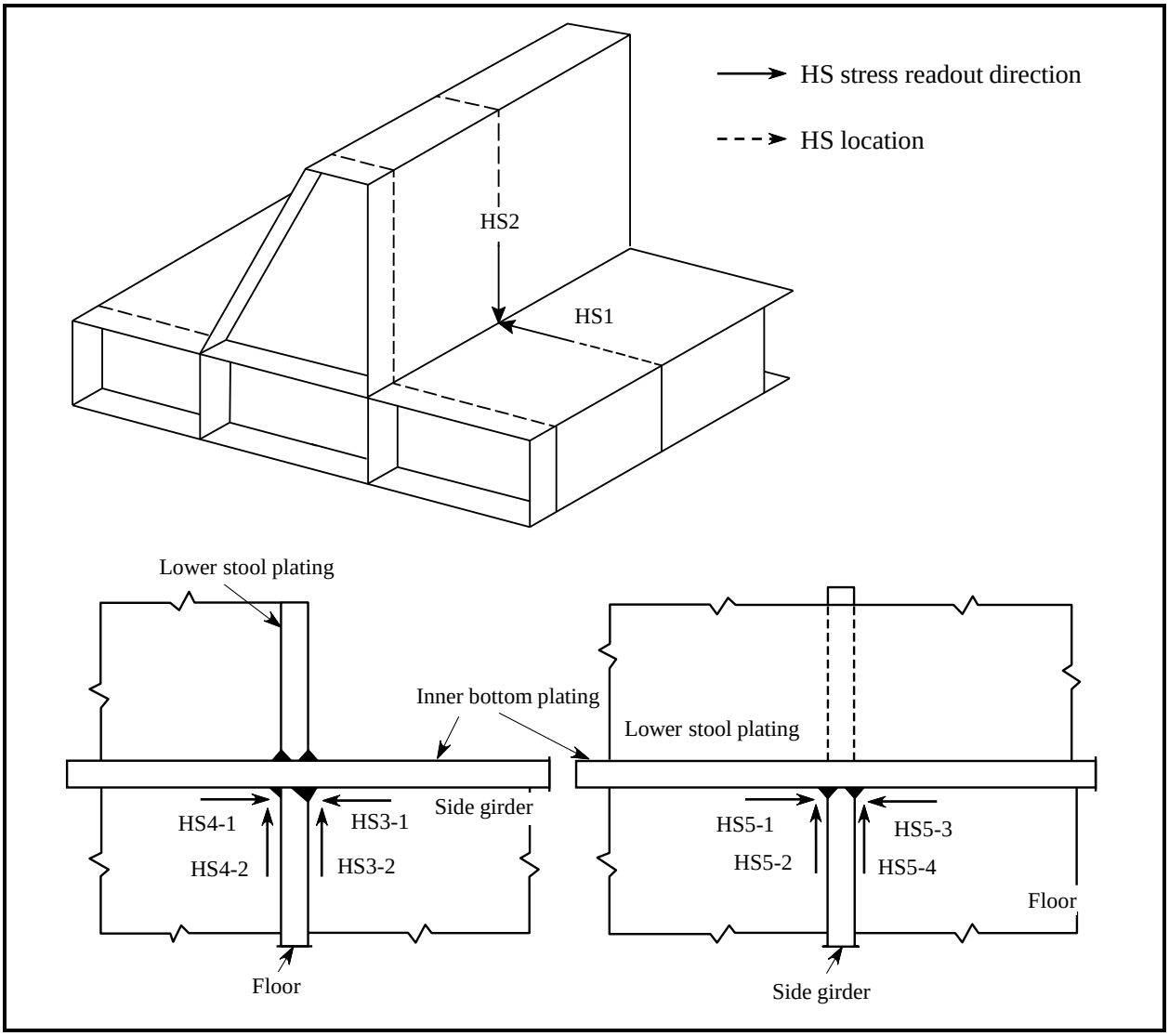
HS stress readout direction
HS location
HS2
HS1
Lower stool plating
Inner bottom plating
Lower stool plating
Side girder
HS4-1
HS3-1
HS4-2
HS3-2
Floor
HS5-1
HS5-3
HS5-2
HS5-4
Floor
Side girder

Table 9.2.2-5 Hot Spots for Corrugated Bulkhead to Lower Stool Connection (with Gusset Plates)

Designation	Location	Member for stress measurement	Type of stress
HS1-1	Connection of corrugation flange edge and shedder plate (Welded corrugation corner)	Corrugation flange edge above shedder plate	**9.4.5.3-2(1)** Type b1
HS1-2	Connection of corrugation corner and shedder plate (Radiused corrugation corner)	Corrugation corner above shedder plate	**9.4.5.3-1(3)** Type a1-2
HS2-1	Connection of corrugation flange and shedder plate (Welded corrugation corner)	Corrugation flange above shedder plate	**9.4.5.3-1(2)** Type a1-1
HS2-2	Connection of corrugation flange and shedder plate (Radiused corrugation corner)	Corrugation flange above shedder plate	**9.4.5.3-1(3)** Type a1-2
HS3-1	Connection of corrugation flange and shedder plate (Welded corrugation corner)	Corrugation flange under shedder plate	**9.4.5.3-1(2)** Type a1-1
HS3-2	Connection of corrugation flange and shedder plate (Radiused corrugation corner)	Corrugation flange under shedder plate	**9.4.5.3-1(3)** Type a1-2
HS4-1	Connection of corrugation flange centre and stool top plating	Corrugation flange	**9.4.5.3-1(3)** Type a1-2
HS4-2	Connection of stool plating at corrugation flange centre and stool top plating	Stool plating	
HS5-1	Connection of corrugation flange or gusset plate at diaphragm position and stool top plating	Corrugation flange or gusset plate	
HS5-2	Connection of stool plating at diaphragm position and stool top plating	Stool plating	**9.4.5.3-1(1)** Type a1-0

For longitudinal bulkheads, the frame position is generally located closest to the mid length of the hold. Where a swash bulkhead is fitted, this is generally located closest to the mid length between the swash bulkhead and the oil-tight bulkhead. For transverse bulkheads, the position is generally located closest to the mid breadth of the hold.

Designation	Location	Member for stress measurement	Type of stress

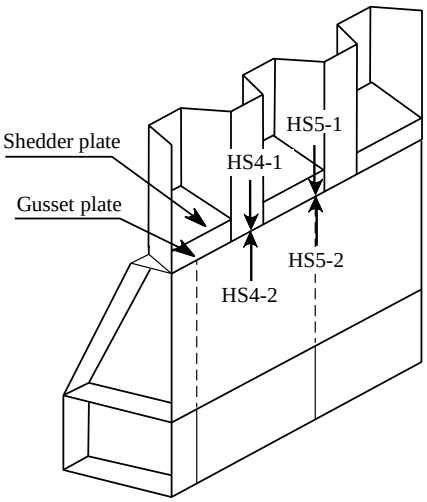

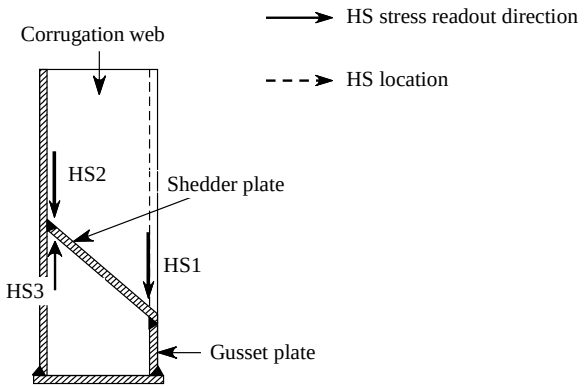

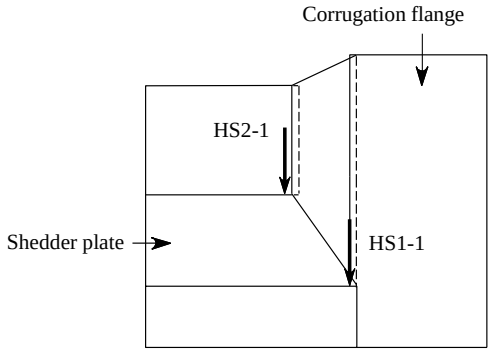

Welded corrugation corner

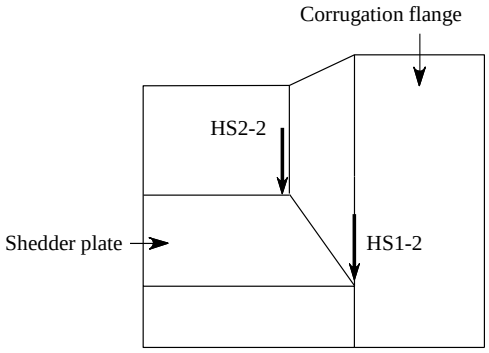

Knuckle corrugation corner

Table 9.2.2-6 Hot Spots for Corrugated Bulkhead to Lower Stool Connection
(Intersecting Shedder Plates and Single Sided Shedder Plate)

Intersecting shedder plates			
Designation	Location	Member for stress measurement	Type of stress
HS6	Intersection of shedder plates	Corrugation flange	9.4.5.3-1(3) Type a1-2
The position is generally located closest to the connection of the longitudinal bulkhead and the transverse bulkhead.			

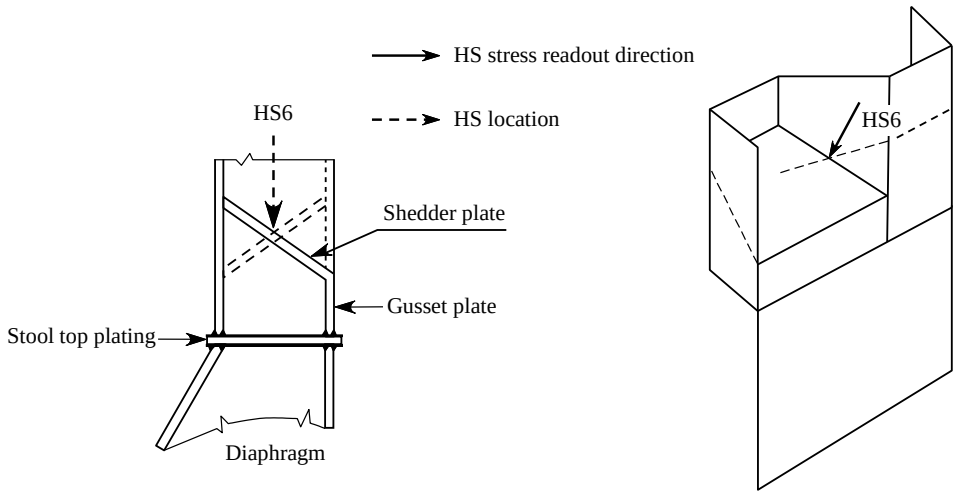

Single sided shedder plate	
Position	Type of stress
Welded connection of corrugation web and flange to lower stool top plating. For details of hot spots, see HS1 and HS2 of Table 9.2.2-7.	9.4.5.3-1(4) Type a2 9.4.5.3-1(3) Type a1-2 9.4.5.3-2(1) Type b1

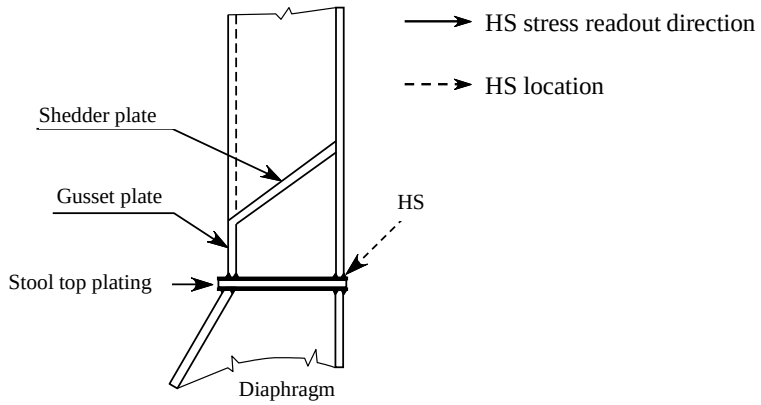

Table 9.2.2-7 Hot Spots for Corrugated Bulkhead to Lower Stool or Inner Bottom Plating Connection (No Gusset Plate)

Designation	Location	Member for stress measurement	Type of stress
HS1-1	Connection of corrugation flange edge and inner bottom plating / stool top plating (1) (Welded corrugation corner)	Inner bottom plating or stool top plating	**9.4.5.3-1(4)** Type a2
HS1-2	Connection of corrugation corner and inner bottom plating / stool top plating (1) (Radiused corrugation corner)	Inner bottom plating or stool top plating (Wide angle side)	**9.4.5.3-1(3)** Type a1-2
HS2-1	Connection of corrugation flange edge and inner bottom plating / stool top plating (2) (Welded corrugation corner)	Corrugation flange edge	**9.4.5.3-2(1)** Type b1
HS2-2	Connection of corrugation corner and inner bottom plating / stool top plating (2) (Radiused corrugation corner)	Corrugation corner	**9.4.5.3-1(3)** Type a1-2
HS3	Free edge of supporting bracket (2)	Supporting bracket	**9.4.5.3-2(5)** Base material

(1) The position is generally located closest to the connection of the longitudinal bulkhead and the transverse bulkhead.

(2) For longitudinal bulkheads, the frame position is generally located closest to the mid length of the hold. Where a swash bulkhead is fitted, this is generally located closest to the mid length between the swash bulkhead and the oil-tight bulkhead. For transverse bulkheads, the position is generally located closest to the mid breadth of the hold.

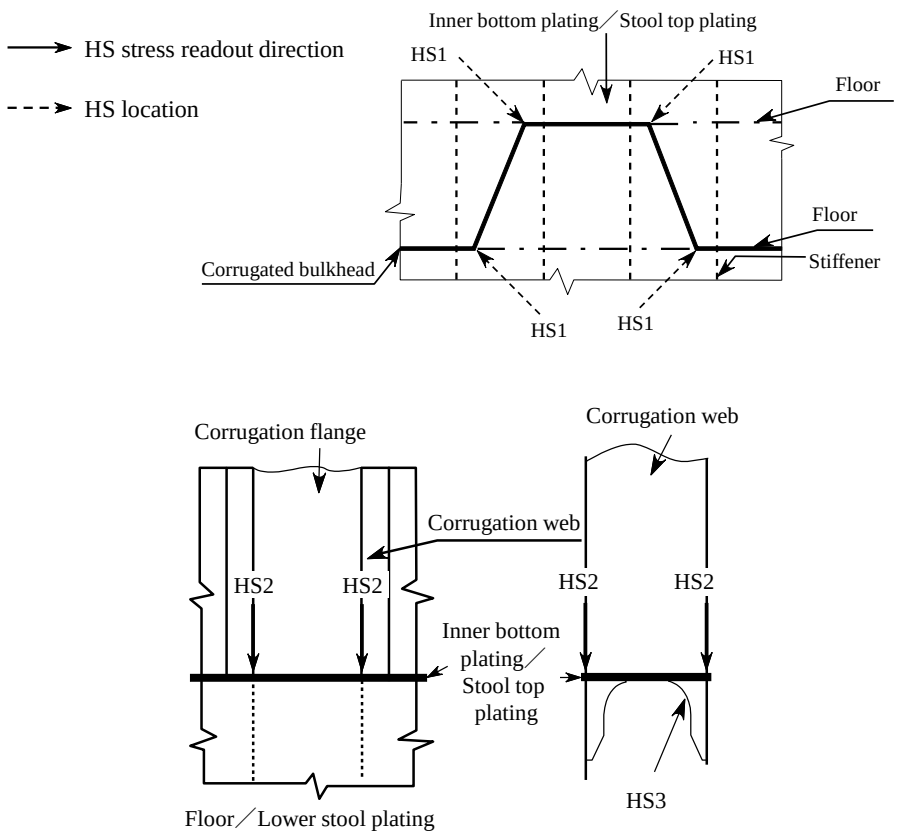

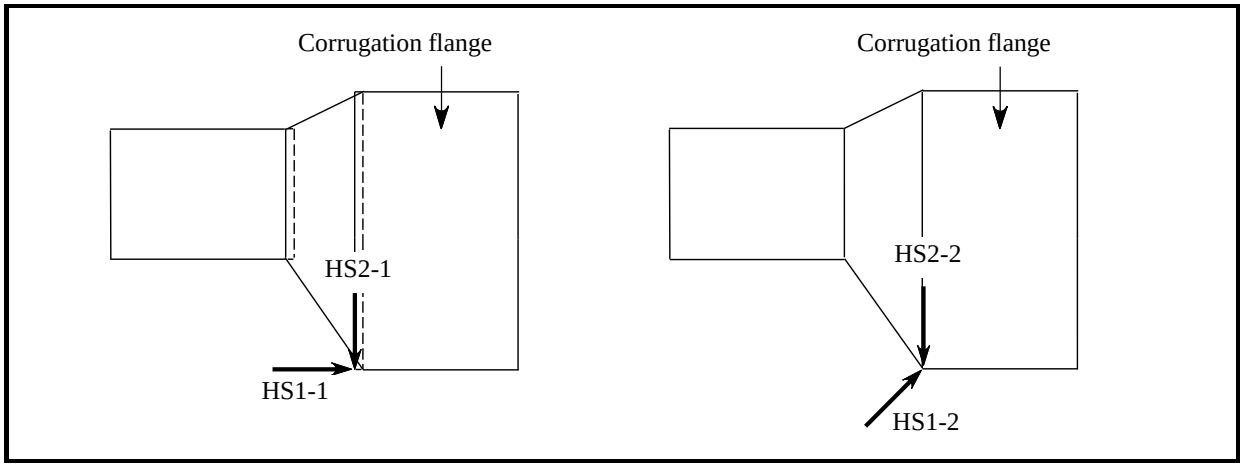
Corrugation flange
HS2-1
HS1-1
Corrugation flange
HS2-2
HS1-2

Table 9.2.2-8 Hot Spots for Connections between Transverse Bulkhead and Inner Longitudinal Bulkhead in way of Transverse Bulkhead Stringer and Side Stringer without Backing Bracket at Stringer Heel

Designation	Location	Member for stress measurement	Type of stress
HS1	Connection of inner longitudinal bulkhead on cargo tank side to plane side of transverse bulkhead (i.e. opposite side to stiffening) at heel of transverse bulkhead horizontal stringer	Inner longitudinal bulkhead opposite side to stiffening	9.4.5.3-1(1) Type a1-0
HS2	Connection of inner longitudinal bulkhead on cargo tank side to plane side of transverse bulkhead (i.e. opposite side to stiffening) at heel of transverse bulkhead horizontal stringer	Transverse bulkhead opposite side to stiffening	
HS3-1	Connection of transverse bulkhead horizontal stringer and the inner longitudinal bulkhead	Horizontal stringer	9.4.5.3-1(2) Type a1-1
HS3-2	Connection of transverse bulkhead horizontal stringer and transverse bulkhead	Horizontal stringer	
HS4-1	Connection of side stringer and inner longitudinal bulkhead	Side stringer	
HS4-2	Connection of side stringer and the transverse girder outboard of inner longitudinal bulkhead	Side stringer	
HS5-1	Connection of side stringer and inner longitudinal bulkhead	Side stringer	
HS5-2	Connection of side stringer and transverse girder outboard of inner longitudinal bulkhead	Side stringer	

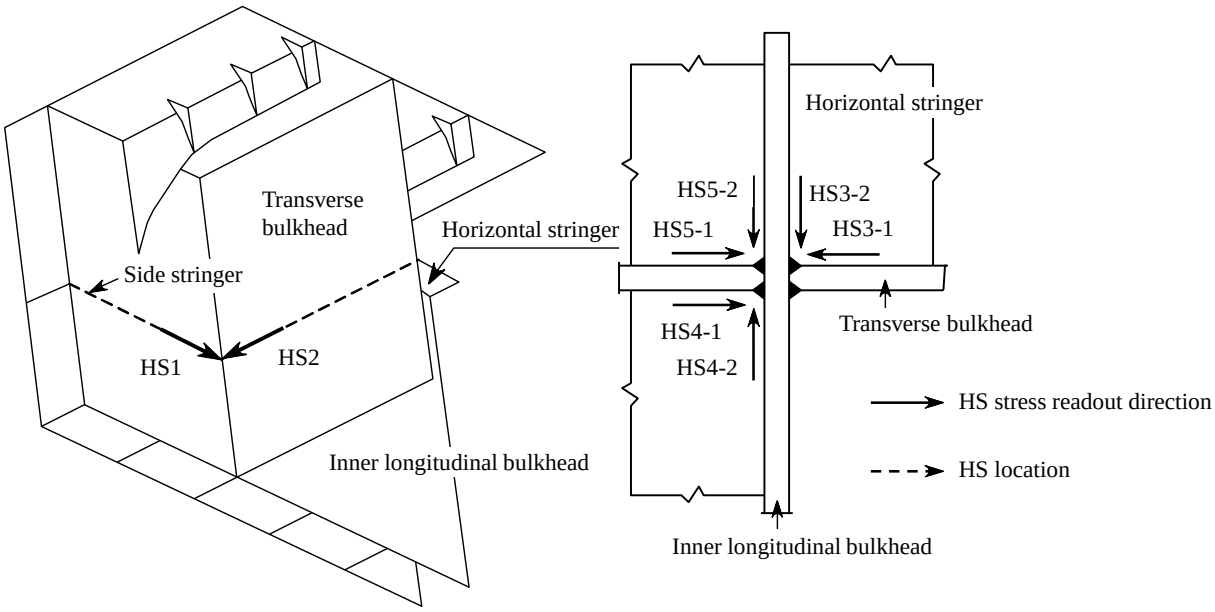

Table 9.2.2-9 Hot Spots for Connection between Transverse Bulkhead and Inner Longitudinal Bulkhead in way of Transverse Bulkhead Horizontal Stringer and Side Stringer, with Backing Bracket at Stringer Heel

Designation	Location	Member for stress measurement	Type of stress
HS1	R region in bracket centre (Where a face plate is not fitted to the bracket)	Bracket	**9.4.5.3-2(5)** Base material
HS2	Inner longitudinal bulkhead at bracket toe	Inner longitudinal bulkhead opposite side to stiffening	**9.4.5.3-1(4)** Type a2
HS3	Transverse bulkhead at bracket toe	Transverse bulkhead opposite side to stiffening	
HS4	Weld connection of face plate to bracket in way of the face plate termination (Where a face plate is fitted to the bracket)	Bracket	**9.4.5.3-2(2)** Type b2-0

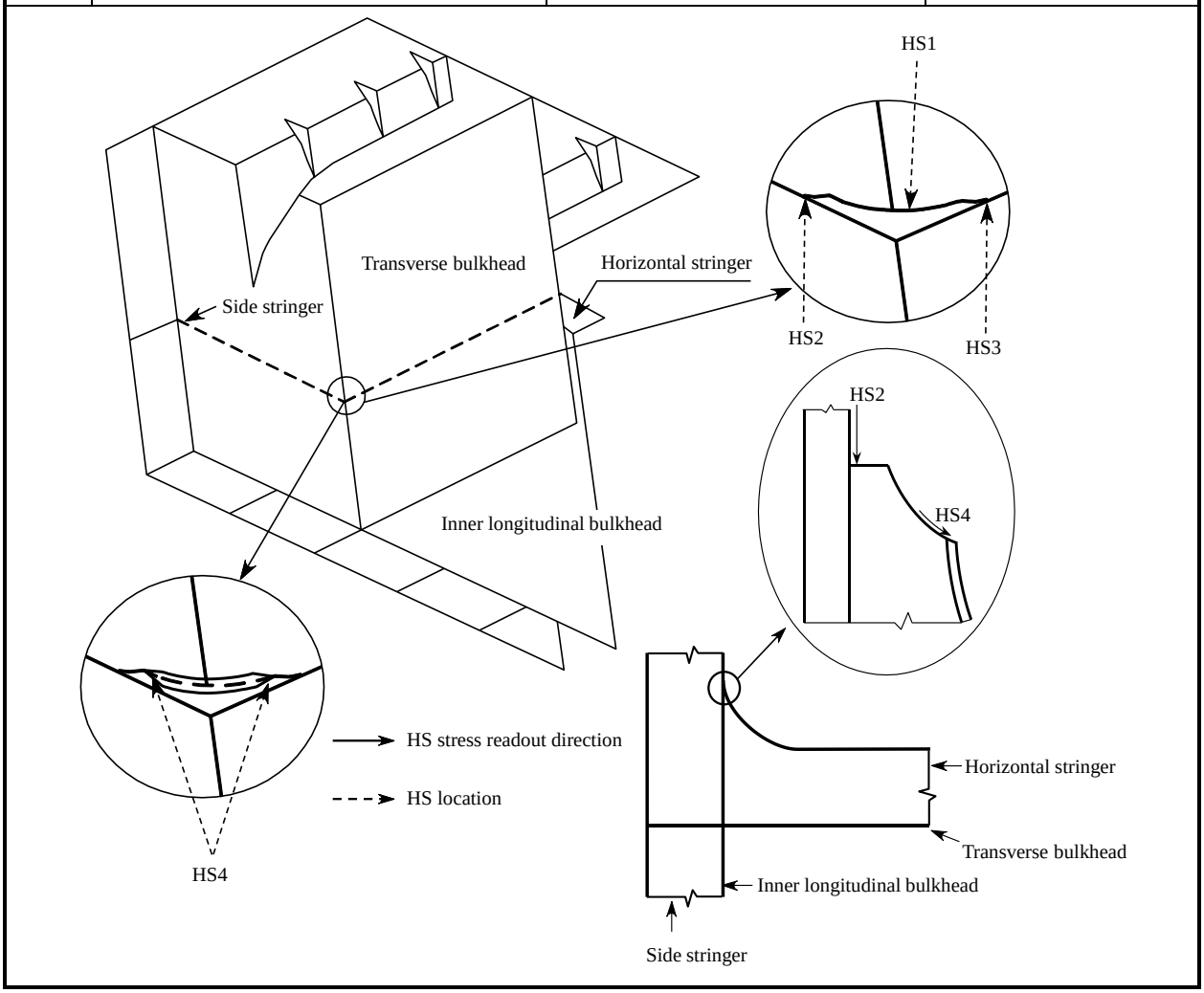

Table 9.2.2-10 Hot Spots for Lower Side Frame Bracket Toe

Designation	Location	Member for stress measurement	Type of stress
HS1	Bilge hopper plating in way of hold frame toe	Bilge hopper plating, on cargo hold side	**9.4.5.3-1(4)** Type a2
HS2	Weld connection of face plate to side frame in way of the face plate termination	Side frame	**9.4.5.3-2(2)** Type b2-0
The frame position is generally located closest to the mid length of the hold. Where a swash bulkhead is fitted, this is generally located closest to the mid length between the swash bulkhead and the oil-tight bulkhead.			

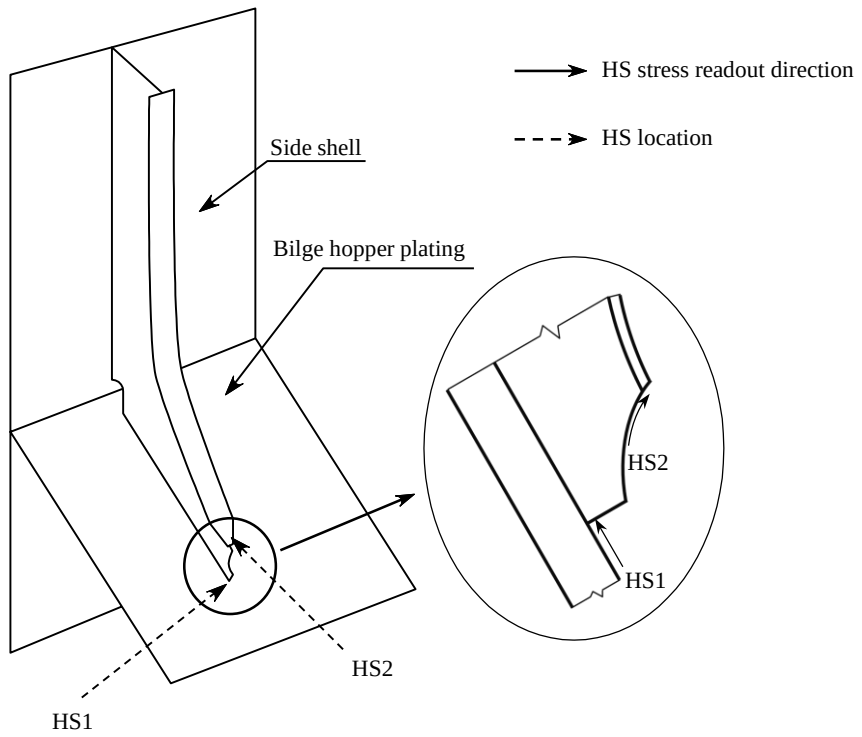

Table 9.2.2-11 Hot Spots for Connections of Longitudinals and Transverse Girder Including Cut-outs and Lug Plates

Designation	Location	Member for stress measurement	Type of stress
The critical hot spot is to be decided for each design in agreement with the Society. Typically the following three hot spots are to be considered:			
HS1	Corners of cut-out edge	Transverse girder	**9.4.5.3-2(5)** Base material
HS2	Connection of transverse girder/lug plate to longitudinal's web in way of slot	Transverse girder and longitudinal's web	**9.4.5.3-2(1)** Type b1
HS3	Overlapping connection between transverse girder and lug plate	Transverse girder	**9.4.5.3-2(2)** Type b2-0

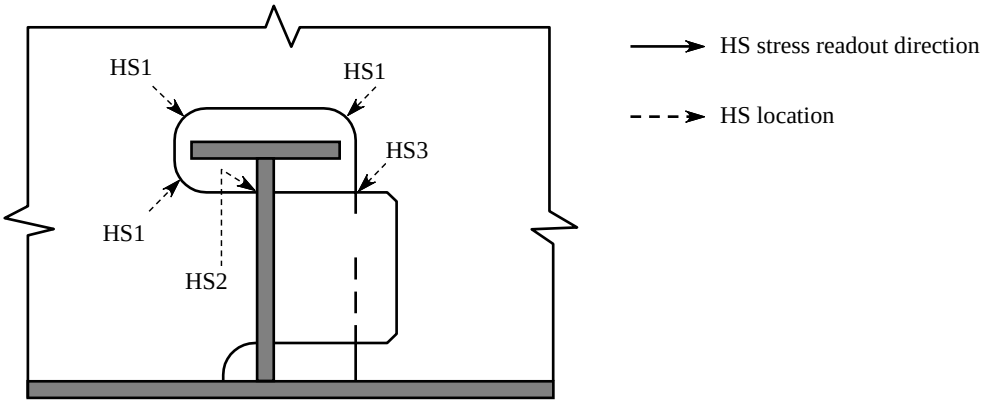

Table 9.2.2-12 Hot Spots for Deck Plating and Longitudinal Hatch Coaming End Bracket Toe

Design ation	Location	Member for stress measurement	Type of stress
HS1	Hatch corner radiused edge	Hatch corner	9.4.5.3-2(5) Base material
HS3	Radius of hatch coaming bracket toe	Bracket of the longitudinal hatch coaming	
HS2	Upper deck plating in way of hatch coaming bracket toe	Upper side of the upper deck	9.4.5.3-1(4) Type a2
HS4	Weld connection of face plate to bracket in way of the face plate termination (Where a face plate is fitted to the bracket)	Bracket	9.4.5.3-2(2) Type b2-0

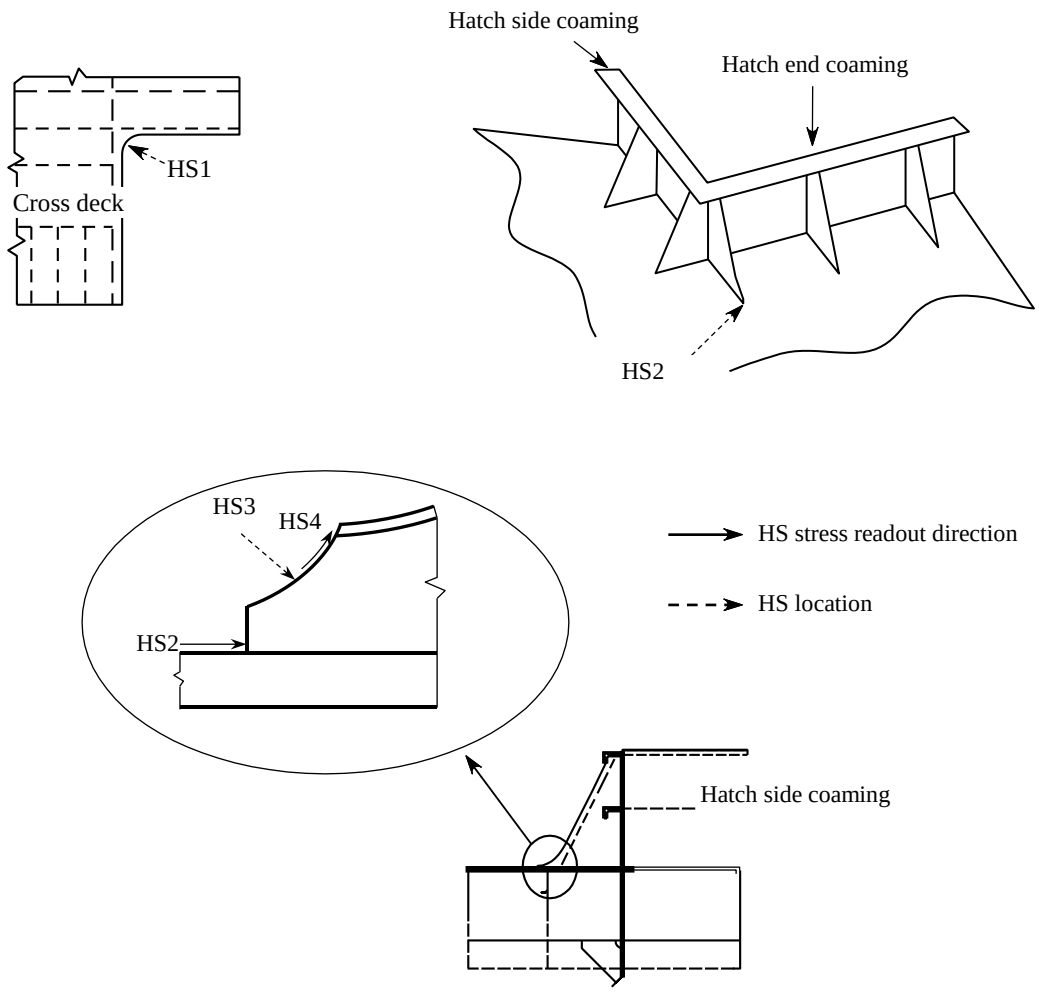

9.3 Simplified Stress Analysis

Symbols

For symbols not specified in this 9.3, refer to 1.4.

(i) Suffix which denotes wave condition *HM, FM*, *BR-P*, *BR-S*, *BP-P* or *BP-S* specified in 4.7.2.2:

"i1" denotes wave condition *HM*-1, *FM*-1, *BR*-1*P*, *BR*-1*S*, *BP*-1*P* or *BP*-1*S*

"i2" denotes wave condition *HM*-2, *FM*-2, *BR*-2*P*, *BR*-2*S*, *BP*-2*P* or *BP*-2*S*

(j) Suffix which denotes loading condition

ℓ_{bdg}: Effective bending span (m) of longitudinal as specified in Chapter 6

I_{y-n25}: Net vertical hull girder moment of inertia (m^4) at the longitudinal position being considered. The corrosion addition considered is given in 3.3.4.

I_{z-n25}: Net vertical hull girder moment of inertia (m^4) at the longitudinal position being considered. The corrosion addition considered is given in 3.3.4.

y: Transverse coordinate (m) of the load calculation point under consideration

z: Vertical coordinate (m) of the load calculation point under consideration

z_n: Distance (m) from the base line to the horizontal neutral axis

K_a: Geometrical stress concentration factor for stress generated due to axial load given in 9.3.6.2

K_b: Geometrical stress concentration factor for stress due to lateral pressure given in 9.3.6.2

K_n: Stress concentration factor due to unsymmetrical longitudinal geometry given in 9.3.6.1

9.3.1 General

9.3.1.1 General

This 9.3 specifies the procedure for simplified stress analysis of the longitudinal end connections.

9.3.1.2 Application

The requirement of this 9.3 is to be used for assessment of the hot spot stress range and mean stress of the longitudinal end connections in the following **(1)** and **(2)**.

(1) Connection of the longitudinal end and floor or transverse girder

(2) Connection of the longitudinal end and transverse bulkhead including swash bulkhead of cargo hold or stool

9.3.1.3 Assumptions

1 Fatigue strength assessment of longitudinal end connections is to be conducted using the hot spot stress calculated from the nominal stress multiplied by the stress concentration factor according to 9.3.6.

2 The longitudinal end connection types are as given in 9.3.6.2.

3 When the connection type is different from those shown in Table 9.3.6-2, the fatigue strength assessment is to be conducted using the hot spot stress calculated by the finite element analysis according to 9.3.7.

9.3.2 Hot Spot Stress

9.3.2.1 Hot Spot Stress Range

The hot spot stress range (N/mm^2) due to dynamic loads for loading condition (j) is to be obtained from the following formula:

$$\Delta\sigma_{HS,(j)} = \max_i(\Delta\sigma_{HS,i(j)})$$

$\Delta\sigma_{HS,i(j)}$: Hot spot stress range (N/mm^2) due to dynamic loads for wave condition (i) of loading condition (j) obtained from the following formula

$$\Delta\sigma_{HS,i(j)} = \left|\left(\sigma_{GD,i1(j)} + \sigma_{LD,i1(j)} + \sigma_{dD,i1(j)}\right) - \left(\sigma_{GD,i2(j)} + \sigma_{LD,i2(j)} + \sigma_{dD,i2(j)}\right)\right|$$

$\sigma_{GD,i1(j)}, \sigma_{GD,i2(j)}$: Stress ($N/mm^2$) due to global hull girder wave bending moments as specified in 9.3.3.1

$\sigma_{LD,i1(j)}, \sigma_{LD,i2(j)}$: Stress ($N/mm^2$) due to local variable pressure as specified in 9.3.4.1

$\sigma_{dD,i1(j)}, \sigma_{dD,i2(j)}$: Stress ($N/mm^2$) due to relative displacement as specified in 9.3.5.2

9.3.2.2 Hot Spot Mean Stress

The hot spot mean stress $\sigma_{mean,(j)}$ (N/mm^2) due to static and dynamic loads for loading condition (j) obtained from $\sigma_{mean,i(j)}$ is to be is to be used with the same wave condition (i) of the respective stress range $\Delta\sigma_{HS,(j)}$:

$\sigma_{mean,i(j)}$: Hot spot mean stress due to static and dynamic loads for wave condition (i) of loading condition (j) obtained from

the following formula$\sigma_{mean,i(j)} = \sigma_{GS,(j)} + \sigma_{LS,(j)} + \sigma_{dS,(j)} + \sigma_{mLD,i(j)}$

$\sigma_{GS,(j)}$: Stress (N/mm^2) due to still water hull girder bending moment as specified in 9.3.3.2

$\sigma_{LS,(j)}$: Stress (N/mm^2) due to local static pressure as specified in 9.3.4.2

$\sigma_{dS,(j)}$: Stress (N/mm^2) due to relative displacement in still water, according to the following formula:

$$\sigma_{dS,(j)} = \frac{\sigma_{dD,i1(j)} + \sigma_{dD,i2(j)}}{2}$$

$\sigma_{dD,i1(j)}, \sigma_{dD,i2(j)}$: Stress ($N/mm^2$) due to relative displacement as specified in 9.3.5.2

$\sigma_{mLD,i(j)}$: Mean stress (N/mm^2) due to local dynamic pressure, according to the following formula:

$$\sigma_{mLD,i(j)} = \frac{\sigma_{LD,i1(j)} + \sigma_{LD,i2(j)}}{2}$$

$\sigma_{LD,i1(j)}, \sigma_{LD,i2(j)}$: Stress ($N/mm^2$) due to local dynamic pressure as specified in 9.3.4.1

9.3.3 Hull Girder Stress

9.3.3.1 Stress due to Hull Girder Wave Bending Moments

The hull girder hot spot stress (N/mm^2) for wave conditions "$i1$" and "$i2$" of loading condition (j) is to be obtained from the following formula:

$$\sigma_{GD,ik(j)} = K_a \left[\frac{M_{WV-LC,ik}}{I_{y-n25}} (z - z_n) - \frac{M_{WH-LC,ik}}{I_{z-n25}} y \right] \times 10^{-3}$$

$M_{WV-LC,ik}$: Vertical wave bending moment $C_{4v} M_{WV}$ ($kN\text{-}m$) of the considered wave condition, as specified in 4.7.2.10, at the hull girder load calculation point of the considered longitudinal position for wave conditions "$i1$" and "$i2$" of loading condition (j)

$M_{WH-LC,ik}$: Horizontal wave bending moment $C_{4h} M_{WH}$ ($kN\text{-}m$) of the considered wave condition, as specified in 4.7.2.10, at the hull girder load calculation point of the considered longitudinal position for wave conditions "$i1$" and "$i2$" of loading condition (j)

9.3.3.2 Stress due to Still Water Hull Girder Bending Moment

The hull girder hot spot stress (N/mm^2) due to still water bending moment in loading condition (j) is obtained from the following formula:

$$\sigma_{GS,(j)} = \frac{K_a \cdot M_{SV} \cdot (z - z_n)}{I_{y-n25}} \times 10^{-3}$$

M_{SV}:Still water vertical bending moment ($kN\text{-}m$) at the hull girder load calculation point of the considered longitudinal position, to be the value specified in the loading manual

9.3.4 Local Stress due to Bending of Longitudinals

9.3.4.1 Stress due to Dynamic Pressure

The hot spot stress (N/mm^2) due to local dynamic pressure for wave conditions "$i1$" and "$i2$" of loading condition (j) is to be obtained from the following formula:

$$\sigma_{LD,ik(j)} = \frac{K_b K_n s \ell_{bdg}{}^2 \left(\eta_w f_{NL} P_{exw,ik(j)} + \eta_{ld} P_{ld,ik(j)} + \eta_{bd} P_{bd,ik(j)}\right) \left(1 - \frac{6x_e}{\ell_{bdg}} + \frac{6x_e{}^2}{\ell_{bdg}{}^2}\right)}{12 Z_{eff-n25}}$$

$P_{exW,ik(j)}$: Wave pressure (kN/m^2) specified in 4.7.2.4-2 at the mid span for wave conditions "$i1$" and "$i2$" for loading condition (j)

$P_{ld,ik(j)}$: Dynamic liquid tank pressure (kN/m^2) at the mid span, as specified in 4.7.2.5-2, for wave conditions "$i1$" and "$i2$" for loading condition (j). Pressure acting on both sides of the longitudinal, i.e. applied on the attached plate on the longitudinal side and on opposite side to the longitudinal, could be simultaneously considered if relevant in the loading condition.

$P_{bd,ik(j)}$: Dynamic dry bulk cargo pressure (kN/m^2) at the mid span, as specified in 4.7.2.6-2, for wave conditions "$i1$" and "$i2$" for loading condition (j)

$\eta_W, \eta_{Id}, \eta_{bd}$: Pressure normal coefficient, taken as:

$\eta = 1$ when the considered pressure acts on the longitudinal side

$\eta = -1$ otherwise

f_{NL}: Correction factor for the non-linearity of the wave pressure as given in Table 9.3.4-1

x_e: Distance (m) to the hot spot from the closest end of the span ℓ_{bdg} as given in Fig. 9.3.4-1

$Z_{eff-n25}$: Section modulus (cm^3) of the considered longitudinal calculated considering an effective breadth b_{eff} of

attached plating

b_{eff}: Effective breadth (mm) of plating specified at the ends of the span and in way of brackets and supporting members, as given in Table 9.3.4-2

Table 9.3.4-1 Values of f_{NL}

Condition	f_{NL}
$z > T_{LC} + 2h_w$	$f_{NL} = 1$
$T_{LC} + 1.8h_w < z \le T_{LC} + 2h_w$	$f_{NL} = 2.5\frac{z - T_{LC}}{h_w} - 4$
$T_{LC} + 1.6h_w < z \le T_{LC} + 1.8h_w$	$f_{NL} = 0.5\frac{z - T_{LC}}{h_w} - 0.4$
$T_{LC} + 1.2h_w < z \le T_{LC} + 1.6h_w$	$f_{NL} = 0.4$
$T_{LC} + 0.6h_w < z \le T_{LC} + 1.2h_w$	$f_{NL} = 0.7 - 0.25\frac{z - T_{LC}}{h_w}$
$T_{LC} - 0.2h_w < z \le T_{LC} + 0.6h_w$	$f_{NL} = 1 - 0.75\frac{z - T_{LC}}{h_w}$
$T_{LC} - h_w < z \le T_{LC} - 0.2h_w$	$f_{NL} = 0.1875\frac{z - T_{LC}}{h_w} + 1.1875$
$z \le T_{LC} - h_w$	$f_{NL} = 1$
h_w: Water head (m) equivalent to the pressure at the waterline as specified in 4.7.2.4-2	

Table 9.3.4-2 Effective Breadth of Attached Plating

Condition	Effective breadth of attached plating
$\frac{\ell_{bdg}}{s}\left(1 - \frac{1}{\sqrt{3}}\right) \times 10^3 \ge 1$	$b_{eff} = s \cdot \min\left(\frac{1.04}{1 + \frac{3}{\left[\frac{\ell_{bdg}}{s}\left(1 - \frac{1}{\sqrt{3}}\right) \times 10^3\right]^{1.35}}}, 1.0\right)$
$\frac{\ell_{bdg}}{s}\left(1 - \frac{1}{\sqrt{3}}\right) \times 10^3 < 1$	$b_{eff} = 0.26\ell_{bdg}\left(1 - \frac{1}{\sqrt{3}}\right) \times 10^3$

Fig. 9.3.4-1 Definition of Effective Span and x_e for Hot Spot

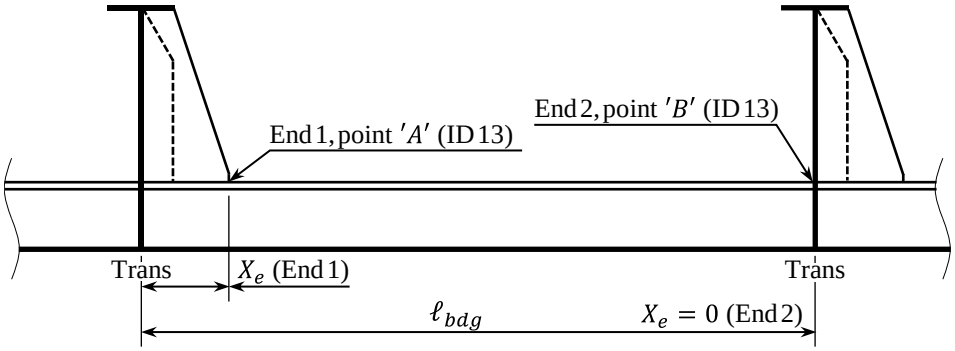

Supported by free flange transverses

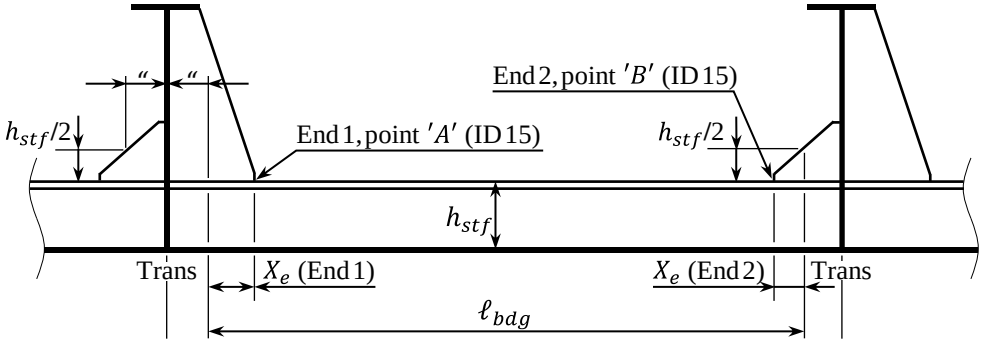

Supported by free flange transverses

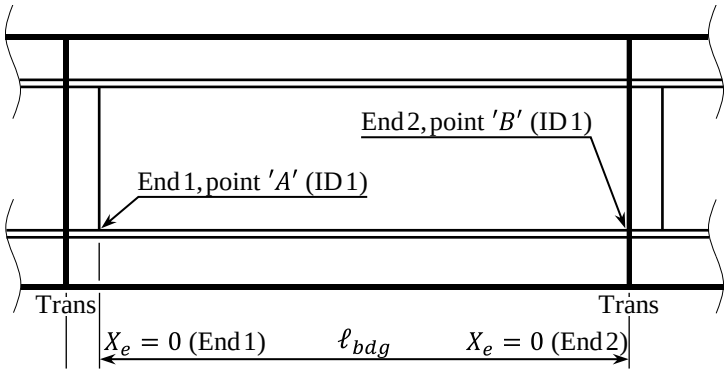

Supported by double skin/transverse bulkheads

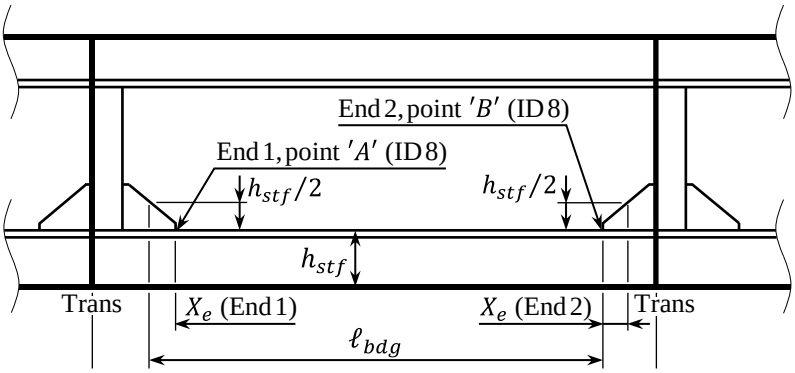

Supported by double skin/transverse bulkheads

9.3.4.2 Stress due to Static Pressure

The hot spot stress (N/mm^2) due to local static pressure for loading condition (j) is to be obtained from the following formula:

$$\sigma_{LS,(j)} = \frac{K_b K_n s \ell_{bdg}{}^2 \left(\eta_s P_{exs,(j)} + \eta_{ls} P_{ls,(j)} + \eta_{bs} P_{bs,(j)}\right)\left(1 - \frac{6x_e}{\ell_{bdg}} + \frac{6x_e{}^2}{\ell_{bdg}{}^2}\right)}{12 Z_{eff-n25}}$$

$P_{exS,(j)}$: Static external pressure (kN/m^2) in loading condition (j) specified in 4.7.2.4-1

$P_{ls,(j)}$: Static liquid tank pressure (kN/m^2) in loading condition (j) specified in 4.7.2.5-1. Pressure acting on both sides of the longitudinal could be simultaneously considered if relevant in the loading condition.

$P_{bs,(j)}$: Static dry bulk cargo pressure (kN/m^2) in loading condition (j) specified in 4.7.2.6-1

η_S, η_{Is}, η_{bs}: Pressure normal coefficient, taken as:

$\eta = 1$ when the considered pressure acts on the longitudinal side

$\eta = -1$ otherwise

9.3.5 Stress due to Relative Displacement

9.3.5.1 General

1 The additional hot spot stress due to relative displacement is to be considered at the ends of transverse bulkheads, including the swash bulkhead of cargo holds, transverse girders in way of stool and longitudinals installed on the floor.

2 Relative displacement is defined as the following **(1)** or **(2)** depending on the assessment position.

(1) For stiffeners penetrating floors in way of stool, the relative displacement is defined as the displacement of the longitudinal measured at the first floor forward or afterward of the stool relative to the displacement of the longitudinal at the floor in way of stool.

(2) For other longitudinals, the relative displacement is defined as the displacement of the longitudinal measured at the first transverse web frame (or floor) forward or afterward of the transverse bulkhead relative to the displacement of the longitudinal at the transverse bulkhead including the swash bulkhead.

3 Where the stress at the hot spot location (i.e. at the flange of the longitudinal) due to relative displacement is in tension, the sign of the relative displacement is positive.

9.3.5.2 Stress due to Relative Displacement

1 The stress due to relative displacement is to be obtained by finite element analysis.

2 The stress $\sigma_{dD,ik(j)}$ (kN/m^2) due to relative displacement is to be obtained by the following formulae:

$$\sigma_{dD,ik(j)} = \begin{cases} K_b \sigma_{d-a,ik(j)} & \text{At position } a \\ K_b \sigma_{d-f,ik(j)} & \text{At position } f \end{cases} \quad (k = 1,2)$$

a, f: Suffix which denotes the location as indicated in Fig. 9.3.5-1

Aft, Fwd: Suffix which denotes the direction, Afterward (Aft) or Forward (Fwd), from the transverse bulkhead as shown in Fig. 9.3.5-1

K_b: Stress concentration factor due to bending for the location "a" or "f" which may correspond to Points "A" or "B" as specified in Table 9.3.6-2

$\sigma_{d-a,ik(j)}$, $\sigma_{d-f,ik(j)}$:

Additional stress (N/mm^2) at location "a" or "f" due to the relative displacement between the transverse bulkhead including the swash bulkhead and the forward (Fwd) or afterward (Aft) transverse girder, or between floors in way of stool and forward (Fwd) or afterward (Aft) floors, for wave conditions $i1$ and $i2$ of loading condition (j), taken as:

$$\sigma_{d-a,ik(j)} = \frac{3}{14}\frac{E}{Z_{Aft-n25}\left(I_{Aft-n25}\ell_{Fwd} + I_{Fwd-n25}\ell_{Aft}\right)}\left[(28-7\alpha) I_{Aft-n25} I_{Fwd-n25}\frac{\delta_{Aft,ik(j)}}{\ell_{Aft}}\left(1 - \frac{56-21\alpha}{28-7\alpha}\frac{|x_{eAft}|}{\ell_{Aft}}\right) + (28-7\alpha) I_{Aft-n25} I_{Fwd-n25}\frac{\delta_{Fwd,ik(j)}}{\ell_{Fwd}}\left(1 - \frac{36-9\alpha}{28-7\alpha}\frac{|x_{eAft}|}{\ell_{Aft}}\right) - (20-12\alpha) I_{Aft-n25}^2 \frac{\ell_{Fwd}\delta_{Aft,ik(j)}|x_{eAft}|}{\ell_{Aft}^3}\right] \times 10^{-5}$$

$$\sigma_{d-f,ik(j)} = \frac{3}{14}\frac{E}{Z_{Fwd-n25}\left(I_{Aft-n25}\ell_{Fwd} + I_{Fwd-n25}\ell_{Aft}\right)}\left[(28-7\alpha) I_{Aft-n25} I_{Fwd-n25}\frac{\delta_{Fwd,ik(j)}}{\ell_{Fwd}}\right.$$

$$\left(1-\frac{56-21\alpha}{28-7\alpha}\frac{|x_{eFwd}|}{\ell_{Fwd}}\right)+(28-7\alpha)I_{Aft-n25}I_{Fwd-n25}\frac{\delta_{Aft,ik(j)}}{\ell_{Aft}}\left(1-\frac{36-9\alpha}{28-7\alpha}\frac{|x_{eFwd}|}{\ell_{Fwd}}\right)$$
$$-(20-12\alpha)I_{Fwd-n25}^2\frac{\ell_{Aft}\delta_{Fwd,ik(j)}|x_{eFwd}|}{\ell_{Fwd}^3}\Bigg]\times 10^{-5}$$

$I_{Fwd-n25}, I_{Aft-n25}$: Moment of inertia (cm^4) of the forward (*Fwd*) and afterward (*Aft*) longitudinals including the effective breadth b_{eff} of attached plating specified in 9.3.4.1

$Z_{Fwd-n25}, Z_{Aft-n25}$: Section modulus (cm^3) of the forward (*Fwd*) and afterward (*Aft*) longitudinals including the effective breadth b_{eff} of attached plating specified in 9.3.4.1

ℓ_{Fwd}, ℓ_{Aft}: Span (m) of forward (*Fwd*) and afterward (*Aft*) longitudinals as shown in Fig. 9.3.5-1

x_{eFwd}, x_{eAft}: Distance (m), as shown in Fig. 9.3.4-1, to the hot spot in location "*a*" or "*f*" from the closest end of ℓ_{Fwd} and ℓ_{Aft} respectively

$\delta_{Fwd,ik(j)}, \delta_{Aft,ik(j)}$: Relative displacement (mm) in the direction perpendicular to the attached plate between the transverse bulkhead including swash bulkhead (or floor in way of stool) and the forward (*Fwd*) or afterward (*Aft*) transverse girder (or floor) as shown in Fig. 9.3.5-1. However, the relative displacement in the stool may be disregarded.

α: Coefficient according to degree of fixation taken as 1.4

Fig. 9.3.5-1 Definition of Relative Displacement (Example of Side Longitudinal)

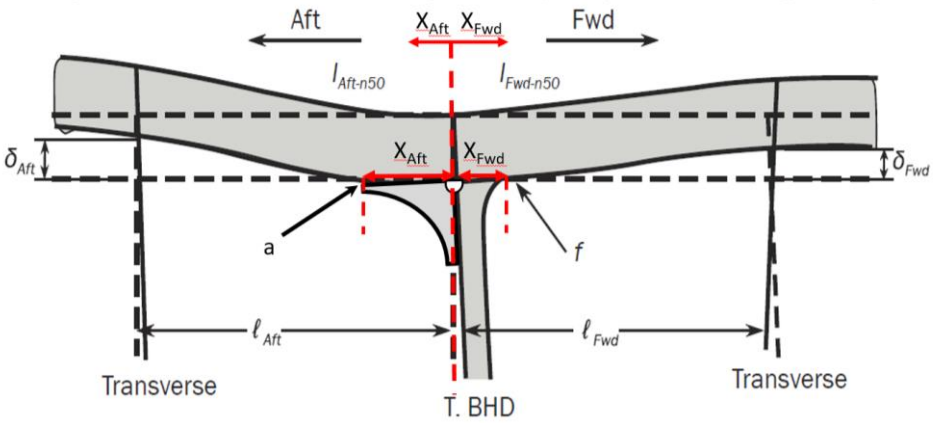

9.3.6 Stress Concentration Factors

9.3.6.1 Unsymmetrical Longitudinal

1 The stress concentration factor K_n for unsymmetrical flanges of longitudinals under lateral load, calculated at the web's mid-thickness position as shown in Fig. 9.3.6-1, is to be taken as:

$$K_n=\frac{1+\lambda\beta^2}{1+\lambda\beta^2\psi_z}$$

λ: Coefficient, as given in the following formula:

Where:

$$\lambda=\frac{3\left(1+\frac{\eta}{280}\right)}{1+\frac{\eta}{40}}$$

$$\eta=\frac{l_{bdg}{}^4 10^{12}}{b_{f-n25}{}^3\cdot t_{f-n25}\cdot h_{stf-n25}{}^2\left(\frac{4\cdot h_{stf-n25}}{t_{w-n25}{}^3}+\frac{s}{t_{p-n25}{}^3}\right)}$$

β: According to the following formulae, depending on the type of the longitudinal

For built-up longitudinals:

$$\beta=1-\frac{2b_{g-n25}}{b_{f-n25}}$$

For rolled angle longitudinals:

$$\beta=1-\frac{t_{w-n25}}{b_{f-n25}}$$

b_{g-n25}: Eccentricity (mm) of the longitudinal equal to the distance from the flange edge to the web centreline, as shown in **Fig. 9.3.6-2**

b_{f-n25}: Flange breadth (mm), as shown in **Fig. 9.3.6-2**

t_{f-n25}: Flange thickness (mm), as shown in **Fig. 9.3.6-2**

$h_{stf-n25}$: Height (mm)of longitudinal, including face plate, as shown in **Fig. 9.3.6-2**

t_{w-n25}: Web thickness (mm), as shown in **Fig. 9.3.6-2**

h_{w-n25}: Web height (mm), as shown in **Fig. 9.3.6-2**

t_{p-n25}: Attached plating thickness (mm), as shown in **Fig. 9.3.6-2**

ψ_z: Coefficient given as:

$$\psi_z = \frac{h_{w-n25}{}^2 t_{w-n25}}{4Z_{n25}} 10^{-3}$$

Z_{n25}: Section modulus (cm^3) of longitudinal with attached plating breadth equal to the longitudinal spacing

Fig. 9.3.6-1 Bending Stress in Longitudinals with Symmetrical and Unsymmetrical Flange

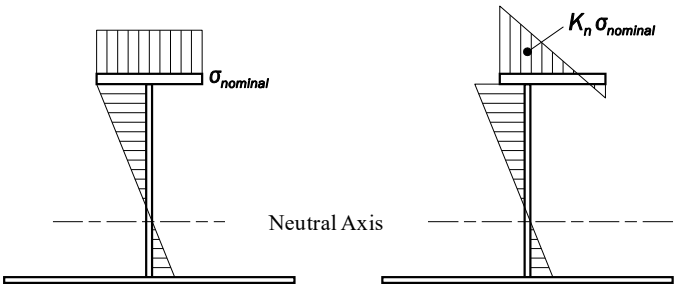

Fig. 9.3.6-2 Net Scantlings of Longitudinal

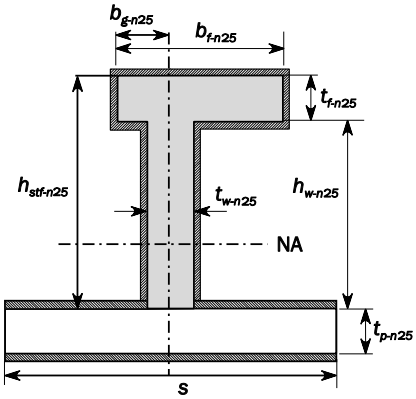

2 For bulb plates, the K_n factor is to be calculated using the equivalent built-up profile as shown in **Fig. 9.3.6-3**. The flange of the equivalent built-up profile is to have the same properties as the bulb flange, i.e. the same cross-sectional area and moment of inertia about the vertical axis and neutral axis position. Examples of the bulb plate equivalent built-up profile dimensions are shown in **Table 9.3.6-1**.

Fig. 9.3.6-3 Bulb Profile and Equivalent Built-up Profile

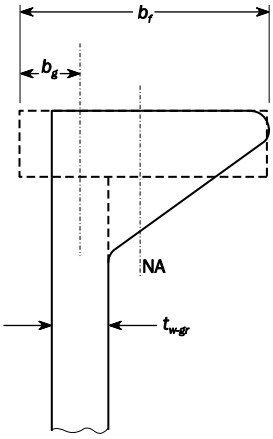

Table 9.3.6-1 Bulb Profile Equivalent Built-up Profile Dimensions

Bulb		Equivalent built-up flange in gross thickness		
Height (mm)	Gross web thickness t_{w-gr} (mm)	b_f (mm)	t_{f-gr} (mm)	b_g (mm)
200	9 – 13	$t_{w-gr}+24.5$	22.9	$(t_{w-gr}+0.9)/2$
220	9 – 13	$t_{w-gr}+27.6$	25.4	$(t_{w-gr}+1.0)/2$
240	10 – 14	$t_{w-gr}+30.3$	28.0	$(t_{w-gr}+1.1)/2$
260	10 – 14	$t_{w-gr}+33.0$	30.6	$(t_{w-gr}+1.3)/2$
280	10 – 14	$t_{w-gr}+35.4$	33.3	$(t_{w-gr}+1.4)/2$
300	11 – 16	$t_{w-gr}+38.4$	35.9	$(t_{w-gr}+1.5)/2$
320	11 – 16	$t_{w-gr}+41.0$	38.5	$(t_{w-gr}+1.6)/2$
340	12 – 17	$t_{w-gr}+43.3$	41.3	$(t_{w-gr}+1.7)/2$
370	13 – 19	$t_{w-gr}+47.5$	45.2	$(t_{w-gr}+1.9)/2$
400	14 – 19	$t_{w-gr}+51.7$	49.1	$(t_{w-gr}+2.1)/2$
430	15 – 21	$t_{w-gr}+55.8$	53.1	$(t_{w-gr}+2.3)/2$

9.3.6.2 Longitudinal End Connections

1 The stress concentration factors K_a and K_b are given in **Table 9.3.6-2** for the end connection of longitudinals subjected to axial and lateral loads. When using the values of **Table 9.3.6-2** for the soft toe, the web stiffener end and toe shape of the backing bracket are to comply with the following:

$\theta \leq 20$

$h_{toe} \leq \max(t_{bkt-gr}, 15)$

θ: Angle of the toe (deg), as shown in **Fig. 9.3.6-4**

h_{toe}:Height of the toe (mm), as shown in **Fig. 9.3.6-4**

t_{bkt-gr}: Bracket gross thickness (mm)

2 Recommended detail designs for longitudinal end connections with soft toes and backing brackets are as shown in **Fig. 9.3.6-4**.

3 When connection types other than those given in **Table 9.3.6-2** are used, the fatigue strength of that type is to be assessed using the hot spot stress obtained as specified in **9.4** or by the hot spot stress calculated by applying the stress concentration factor obtained as specified in **9.3.7**.

Fig. 9.3.6-4 Detail Design of Soft Toes and Backing Brackets

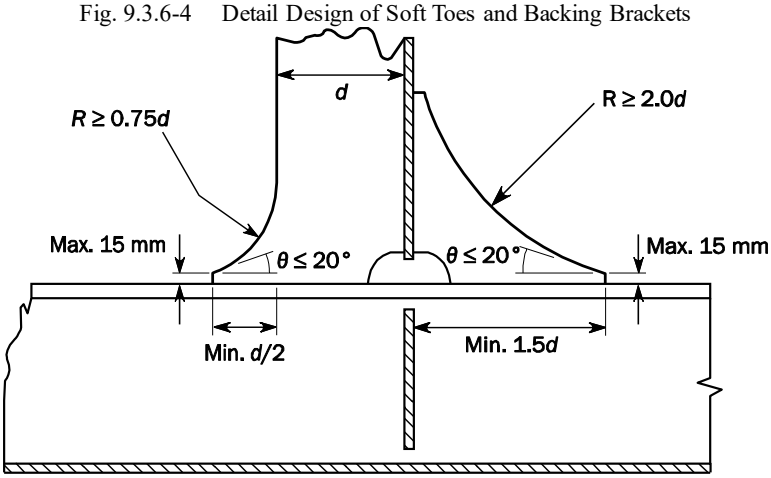

Recommended design of soft toes and backing bracket of web stiffeners

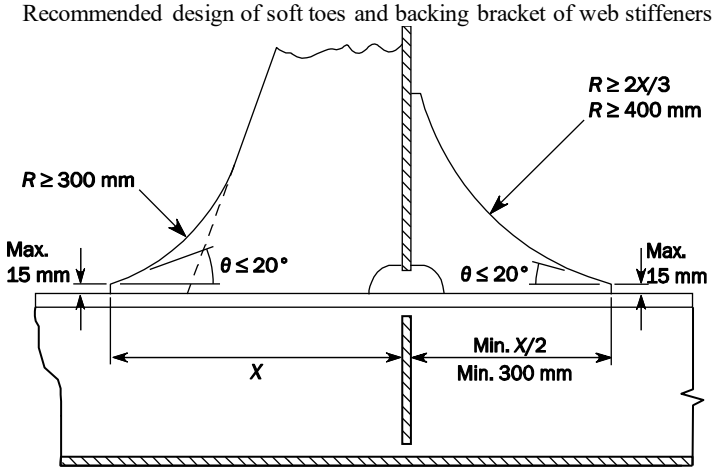

Recommended design of soft toes and backing bracket of tripping brackets

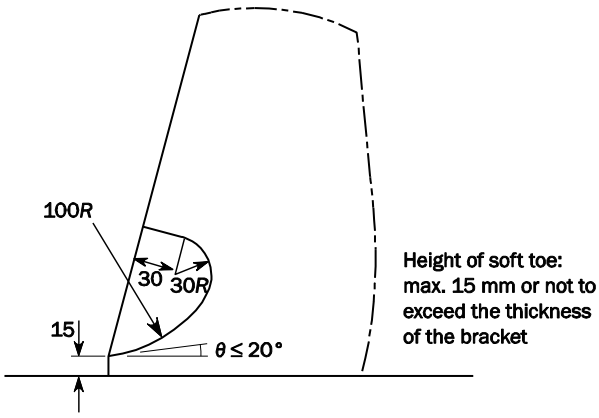

Recommended alternative design of soft toes of tripping brackets

9.3.6.3 Flat Bar Longitudinal End Connections

1 When flat bar longitudinals are used and web stiffeners or brackets are installed (ID1 to ID30 of **Table 9.3.6-2**), the stress concentration factor applied at the end connection is to be 1.4 times the value in **Table 9.3.6-2**. However, when the thickness of the longitudinal is not less than 1.4 times the thickness of the web stiffener or bracket, the stress concentration factor is to be 1.25 times the value in **Table 9.3.6-2**.

2 When the hot spot is obtained by very fine mesh finite element analysis, the stress concentration factor is to be corrected by multiplying the following factors, depending on the thickness of the longitudinal and the thickness of the web stiffener or bracket at the end connection.

$$f_{\mathrm{HSS}} = 0.436 \cdot \left(\frac{t_{2-n25}}{t_{1-n25}} - 1\right)^2 + 1$$

t_{1-n25}: Thickness (mm) of flat bar longitudinal

t_{2-n25}: Thickness (mm) of stiffener connected to flat bar longitudinal

9.3.6.4 Longitudinal without End Connection to Stiffener

1 When a stiffener is omitted or not connected to the longitudinal flange in way of the following, a watertight collar plate as shown in **Fig. 9.3.6-5** (Type *ID*31 connection in **Table 9.3.6-2**) is to be installed or the detail design of the cut-out region as specified in **9.6.3.1** is to be used.

(1) Side shell below $1.1T_{sc}$

(2) Bottom

(3) Inner longitudinal bulkhead below $1.1T_{sc}$

(4) Bilge hopper

(5) Topside tank sloping plate below $1.1T_{sc}$

(6) Inner bottom plating

2 Equivalence to cut-outs given in **9.6.3.1** may be accepted provided it is assessed for fatigue by using comparative analysis by finite element analysis based on hot spot stress around the cut-out in the web plate of the primary supporting member inclusive of the collar, as given in **9.6.3.2**.

Fig. 9.3.6-5 Watertight Collar Plate

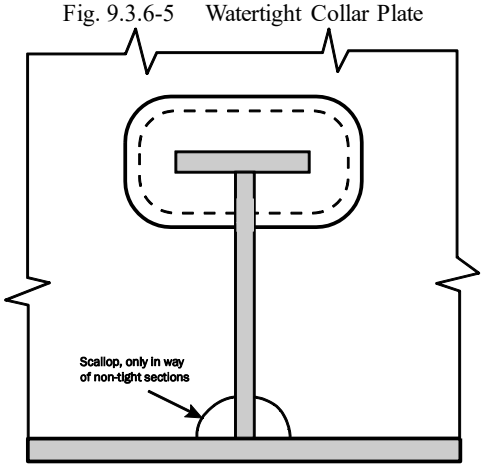

Table 9.3.6-2 Stress Concentration Factors for End Connections of Longitudinals with Flanges

ID	Connection type (2)	Point *A*		Point *B*	
		K_a	K_b	K_a	K_b
1 (1)	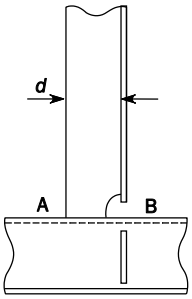	1.28 for $d \leq 150$ 1.36 for $150 < d \leq 250$ 1.45 for $d > 250$	1.40 for $d \leq 150$ 1.50 for $150 < d \leq 250$ 1.60 for $d > 250$	1.28 for $d \leq 150$ 1.36 for $150 < d \leq 250$ 1.45 for $d > 250$	1.60
2 (1)	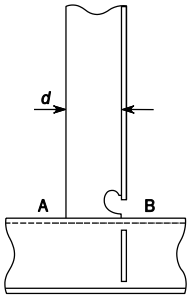	1.28 for $d \leq 150$ 1.36 for $150 < d \leq 250$ 1.45 for $d > 250$	1.40 for $d \leq 150$ 1.50 for $150 < d \leq 250$ 1.60 for $d > 250$	1.14 for $d \leq 150$ 1.24 for $150 < d \leq 250$ 1.34 for $d > 250$	1.27
3	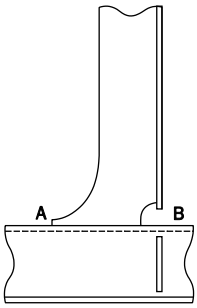	1.28	1.34	1.52	1.67
4	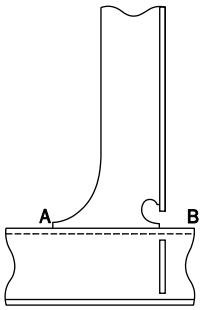	1.28	1.34	1.34	1.34
5	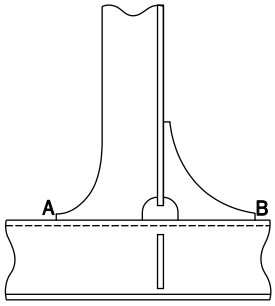	1.28	1.34	1.28	1.34

ID	Connection type (2)	Point *A*		Point *B*	
		K_a	K_b	K_a	K_b
6	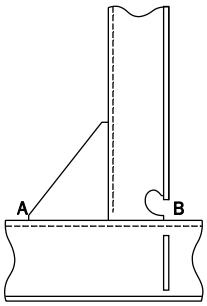	1.52	1.67	1.34	1.34
7	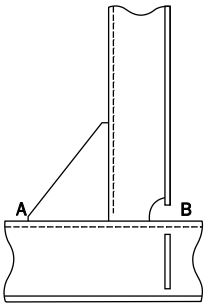	1.52	1.67	1.52	1.67
8	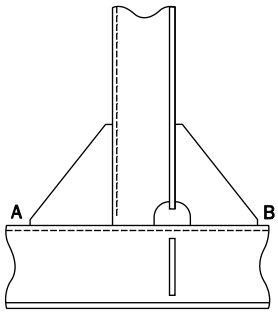	1.52	1.67	1.52	1.67
9	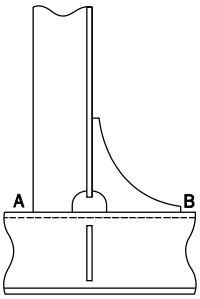	1.52	1.67	1.28	1.34
10	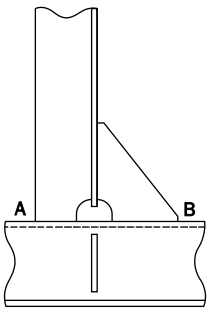	1.52	1.67	1.52	1.67

ID	Connection type (2)	Point *A*		Point *B*	
		K_a	K_b	K_a	K_b
11	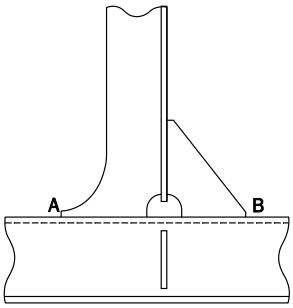	1.28	1.34	1.52	1.67
12	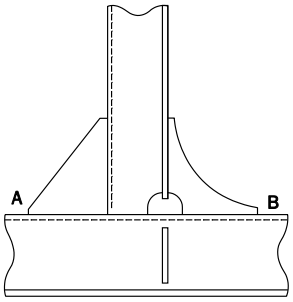	1.52	1.67	1.28	1.34
13	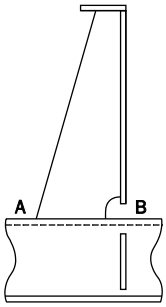	1.52	1.67	1.52	1.67
14	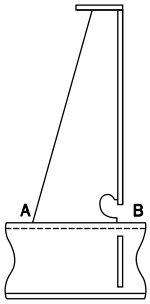	1.52	1.67	1.34	1.34
15	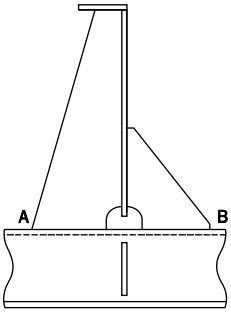	1.52	1.67	1.52	1.67

ID	Connection type (2)	Point *A*		Point *B*	
		K_a	K_b	K_a	K_b
16	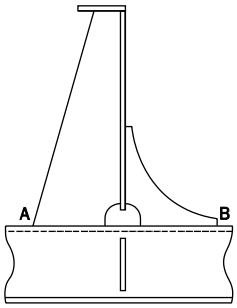	1.52	1.67	1.28	1.34
17	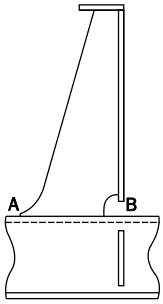	1.28	1.34	1.52	1.67
18	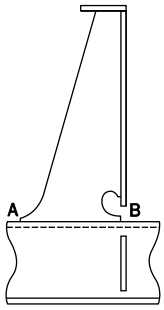	1.28	1.34	1.34	1.34
19	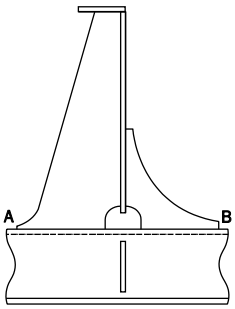	1.28	1.34	1.28	1.34
20	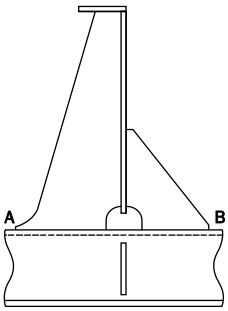	1.28	1.34	1.52	1.67

ID	Connection type (2)	Point *A*		Point *B*	
		K_a	K_b	K_a	K_b
21	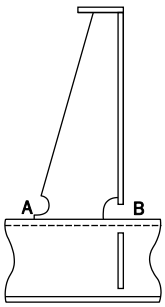	1.28	1.34	1.52	1.67
22	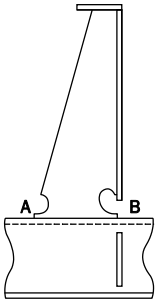	1.28	1.34	1.34	1.34
23	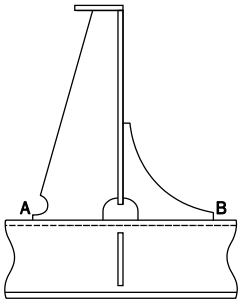	1.28	1.34	1.28	1.34
24	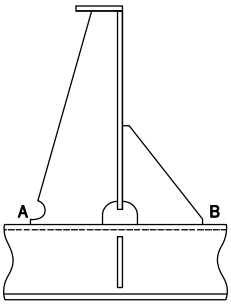	1.28	1.34	1.52	1.67
25 (1)	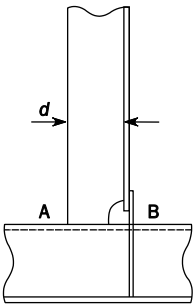	1.28 for $d \leq 150$ 1.36 for $150 < d \leq 250$ 1.45 for $d > 250$	1.40 for $d \leq 150$ 1.50 for $150 < d \leq 250$ 1.60 for $d > 250$	1.14 for $d \leq 150$ 1.24 for $150 < d \leq 250$ 1.34 for $d > 250$	1.25 for $d \leq 150$ 1.36 for $150 < d \leq 250$ 1.47 for $d > 250$

ID	Connection type (2)	Point *A*		Point *B*	
		K_a	K_b	K_a	K_b
26	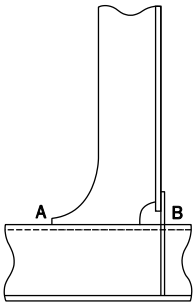	1.28	1.34	1.34	1.47
27	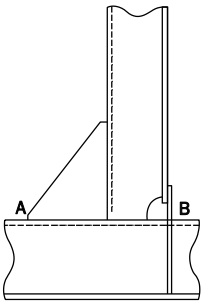	1.52	1.67	1.34	1.47
28	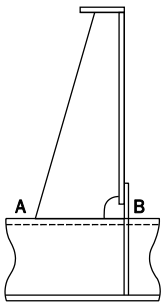	1.52	1.67	1.34	1.47
29	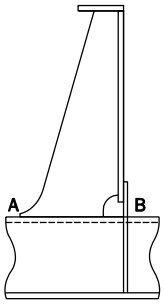	1.28	1.34	1.34	1.47
30	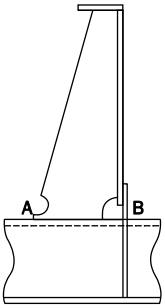	1.28	1.34	1.34	1.47

ID	Connection type (2)	Point *A*		Point *B*	
		K_a	K_b	K_a	K_b
31 (3)	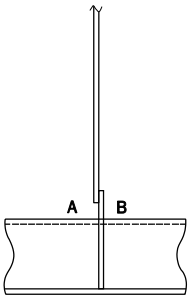	1.13	1.20	1.13	1.20

(1) The attachment length d (mm) is defined as the length of the welded attachment on the longitudinal flange without deduction of scallop.

(2) This also applies to unsymmetrical profiles where there is less than 8 mm clearance between the edge of the longitudinal flange and the attachment, e.g. bulb or angle profiles where the clearance of 8 mm cannot be achieved.

(3) *ID*31 refers to details where the web stiffener is omitted or not connected to the longitudinal flange. *See* 9.3.6.4.

9.3.7 Alternative Design

9.3.7.1 Derivation of Alternative Stress Concentration Factor

1 The derivation procedure for stress concentration factors for longitudinal end connections by a very fine mesh finite element analysis is given in the following **(1)** to **(3)**.

(1) The stress concentration factor is to be calculated by the following **(a)** to **(e)** based on an analysis using a finite element model of the longitudinal end connection to be considered.

(a) The extent and boundary condition of the finite element model are to be able to accurately reproduce the structural response of the longitudinal end connection to be assessed and to output an appropriate nominal stress and hot spot stress.

(b) At the location of the hot spot under consideration, the mesh size is to be in the order of the thickness of the longitudinal flange, but is to be 10 mm for flat bar longitudinals. In the area other than the very fine mesh area, the element size is to be in the order of $s/10$, where s is the longitudinal spacing.

(c) In general, the following loads are to be considered as the applied loads:

i) Axial load by enforced displacement applied to the model ends

ii) Lateral load by unit pressure applied to the shell plating

(d) The hot spot location and the definition and derivation method of hot spot stress are as given in 9.4.

(e) For the loads specified above in **(c) i)** and **ii)**, the stress concentration factors are determined as follows:

i) For the axial load

$$K_a = \frac{\sigma_{HSAx}}{\sigma_{NomAx}}$$

ii) For the bending load

$$K_b = \frac{\sigma_{HSBd}}{\sigma_{NomBd}}$$

σ_{HSAx}: Hot spot stress (N/mm^2) determined at the longitudinal flange or flat bar longitudinal edge for the axial load. For flat bar longitudinals, the hot spot stress is to be multiplied by f_{HSS} given in 9.3.6.3.

σ_{NomAx}: Nominal axial stress (N/mm^2) calculated at the longitudinal according to 9.3.3 for the axial load applied for the finite element analysis

σ_{HSBd}: Hot spot stress (N/mm^2) determined at the longitudinal flange or flat bar longitudinal edge for the unit pressure load. For flat bar longitudinals, the hot spot stress is to be multiplied by f_{HSS} given in 9.3.6.3.

σ_{NomBd}: Nominal bending stress (N/mm^2) calculated at the longitudinal flange or flat bar longitudinal edge according to 9.3.4 in way of the hot spot for the unit pressure load applied for the finite element analysis

(2) The finite element model is to be made by selecting a similar construction from **Table 9.3.6-2** using the same scantlings of the longitudinal end connections considered. The stress concentration factor is calculated by analysis of this finite element model.

(3) The stress concentration factor specified for the construction selected in **(2)** above (**Table 9.3.6-2**) is to be multiplied by the ratio of the stress concentration factors obtained in **(1)** and **(2)** above.

2 The derivation of stress concentration factors in the alternative design is to be documented and provided to the Society, and the approval of the Society is to be obtained in advance.

3 When this method is used, $K_n = 1$ is to be used for the stress concentration factor for unsymmetrical cross section specified in **9.3.6.1**.

9.4 Finite Element Analysis

9.4.1 General

9.4.1.1 General

The requirements of the evaluation method for hot spot stresses of connection of platings and girders, and the free edges of base materials by very fine finite element analysis is specified in **9.4**. The hot spot stress takes into account structural discontinuities due to the structural details of joints but does not consider local stress concentrations due to the presence of welds.

9.4.1.2 Confirmation of Calculation Method and Accuracy of Analysis

1 The analysis method and analysis program are to have the following functions.

(1) The effect of bending, shear, axial, and torsional deformation are to be effectively taken into consideration.

(2) The behaviour of the 3-D structural model is to be represented effectively under reasonable boundary conditions.

(3) The method and program are to be confirmed to have sufficient analytical accuracy.

2 The analysis method is to be approved in advance by the Society. The submission of details regarding the analysis method and verification of accuracy may be required when deemed necessary by the Society.

9.4.1.3 Strength Assessment Based on Advanced Analysis

In the application of **9.4**, the strength assessment based on an advanced analysis, such as direct load analysis, may be conducted when deemed appropriate by the Society. However, when the hot spot stress is calculated from the stress obtained by the analysis, no other methods than those specified in **9.4** are to be adopted.

9.4.1.4 Types of Hot Spot

The types of hot spots are described in **Table 9.4.1-1**. These are defined according to their location on the plate and their orientation to the weld toe as shown in **Fig. 9.4.1-1**.

Fig. 9.4.1-1 Types of Hot Spots

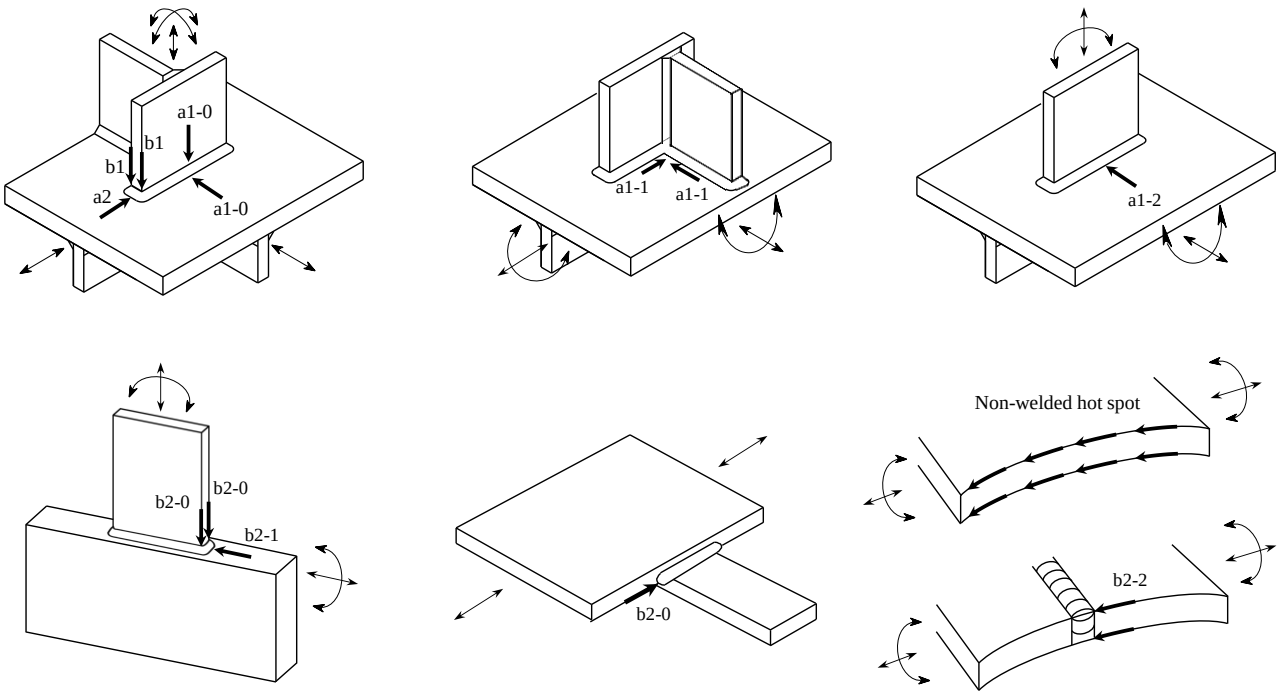

Table 9.4.1-1 Types of Hot Spots

Type		Description
a1	a1-0	Hot spot at the weld toe on the considered plate surface, where the plate is welded to a plate supported by a plate or bracket.
	a1-1	Hot spot at the weld toe on the considered plate surface at the corner surrounded by two intersecting plates.
	a1-2	Hot spot at the weld toe on the considered plate surface, where the plate is welded to a plate not supported by a plate or bracket. (The hot spot is located at the point of highest stress along the welded joint on the considered plate surface.)
a2	-	Hot spot at the weld toe on the considered plate surface at a gusset plate or bracket edge face, where the gusset plate or bracket is welded to the plate surface.
b1	-	Hot spot at the weld toe at corner of the considered gusset plate or bracket edge, where the gusset plate or bracket is welded to a plate surface.
b2	b2-0	Hot spot at the weld toe at corner of the considered plate edge, where the gusset plate or bracket is welded to a plate edge in the same plane. (The hot spot is the weld toe at corner of the thinner plate edge.)
		Hot spot at the weld toe at the face plate tip of a plate, frame, or bracket.
		Hot spot at the weld toe at corner of the loaded plate edge, where plates are welded by lap joint.
	b2-1	Hot spot at the weld toe on the considered plate edge face, where the gusset plate or bracket is welded to a plate edge in the same plane. (The hot spot is the weld toe on the edge face of the thicker plate.)
	b2-2	Hot spot at the weld toe at corner of the considered plates edge, where plates are welded by butt joint.
Base material	-	Hot spot at corner of the considered plate edge, where a structural discontinuity exists and the plates are not jointed by welding. (The hot spot is located at the point of highest stress along corner of the plate edge.)

9.4.2 Finite Element Modelling

9.4.2.1 General

1 The standard method for evaluation of hot spot stresses for fatigue strength assessment is to incorporate very fine finite element mesh zones for areas of high stress concentration into the global model.

2 The coarse mesh model of the cargo holds is to be made according to **8.3**. Alternatively, this very fine mesh analysis can be carried out by means of separate local finite element models with very fine mesh zones in conjunction with the boundary conditions obtained from a global model of the cargo holds. In this case, the corrosion deductions of the global model of the cargo holds are to be in coincidence with those of the local finite element model.

9.4.2.2 Extent of Model

1 The extent of a model is to be determined so that the structural response of the target hold and the positions to be assessed can be accurately reproduced. For standard method, the model is to represent three adjacent cargo holds with the target hold in the middle according to **8.3.1**.

2 Notwithstanding the requirement in **-1**, where estimation of a structural response that cannot be reproduced by the structural model of three adjacent cargo holds is required, modelling of the entire ship may be requested.

9.4.2.3 Members to be Modelled

1 All members in the very fine mesh zones are to be modelled. Here, "all members" include small items such as brackets, bracket face plates, plates edge.

2 The members specified in 8.3.1.2 are to be modelled outside the very fine mesh zone. Notwithstanding the requirement in 8.3.1.2, where small members or openings expected to affect hot spot stresses are located in the zone adjacent to but outside the very fine mesh zone, such small members are to be appropriately modelled.

9.4.2.4 Element Types

1 The element types used in the model are to be in accordance with the following **(1)** to **(4)**:

(1) Plating and girders are to be modelled using shell elements.

(2) Stiffeners, the face plates of primary supporting members and the face plates of brackets in the very fine mesh zone are to be modelled using shell elements.

(3) In principle, stiffeners outside the very fine mesh zone are to be modelled using beam elements and the eccentricity of the neutral axis is to be considered.

(4) Face plates of primary supporting members and of brackets outside the very fine mesh zone are to be modelled using rod elements or beam elements.

2 When deemed necessary by the Society, use solid elements may be requested.

3 The properties of the elements are to be in accordance with the requirement in 8.3.2.2.

9.4.2.5 Corrosion Model

The very fine mesh finite element models used for fatigue strength assessment are to be made using t_{n25} (mm). The corrosion addition to be considered is to be in accordance with the requirement in 3.3.4.

9.4.2.6 Local Finite Element Model

1 Where a separate local finite element model is used, the extent of the local model is to be such that the calculated stresses in the evaluation area are not significantly affected by the boundary condition. The boundary of the fine mesh region is to be taken at adjacent primary supporting members such as girders, stringers and floors in the hold model as far as practicable. Transverse web frames, stringer plates and girders at the boundaries of the local model need not be represented in the local model.

2 When a local finite element model is used, the extent of the local model and the modelling procedure are to be approved in advance by the Society.

9.4.2.7 Mesh Size

1 The size of the very fine mesh is to be in accordance with the following **(1)** to **(4)**:

(1) The very fine mesh finite element model for the evaluation of "*a*" type hot spot stress is to be based on shell element of standard mesh size $t_{gr} \times t_{gr}$, where t_{gr} is the gross thickness (mm) of the member for evaluation of the considered hot spot.

(2) The very fine mesh finite element model for the evaluation of "*b*" type hot spot stress is to be based on shell element of standard mesh size $10\ mm \times 10\ mm$.

(3) Except the following **(a)** to **(c)**, in principle, the mesh size of hot spots consisting of plates of different thicknesses may be the thickness of the thinnest plate among those evaluated.

(a) When the member that fatigue strength is considered critical is assessed as "*a*" type, the mesh size is to be equal to the thickness of that member.

(b) When the mesh size for "*a*" type hot spot is smaller than the half plate thickness, very fine mesh zones corresponding to the respective mesh sizes are to be prepared.

(c) When "*a*" and "*b*" type hot spots exist together in one structural detail and the thickness of the plate with "*a*" type hot spot exceeds 20 mm, very fine mesh zones corresponding to the respective mesh sizes are to be prepared.

(4) Notwithstanding the requirements in **(1)** to **(3)** above, a mesh size which is smaller than half the plate thickness may be used for type "*a*" hot spots where deemed appropriate by the Society.

(5) The mesh size of very fine mesh finite element models for the evaluation of "*a*2" type spot is not to be greater than the thickness of the considered plate.

2 The very fine mesh zone is to be extending over at least 10 elements in all directions from the hot spot. The transition of the surrounding element size between the coarser mesh and the very fine mesh zone is to be done gradually. This transition mesh is to be such that a uniform mesh with regular shape gradually transitions from smaller elements to larger ones. An example of the mesh

transition in way of the side frame bracket toe is shown in Fig. 9.4.2-1.

9.4.2.8 Notes on Modelling

1 Four-node shell elements are to be used inside the very fine mesh zone.

2 The four-node element is to have a complete linear field of in-plane stresses, and hence pure in-plane bending of the element can be exactly represented.

3 The shell elements are to represent the mid plane of the plating. For practical purposes, adjoining plates or girders of different thicknesses may be assumed to be median line aligned, i.e. no staggering in way of thickness change is required.

4 The geometry of the weld and construction misalignment are not required to be modelled.

5 All structure in close proximity to the very fine mesh zone is to be modelled explicitly with shell elements so that the structural response of the very fine mesh zone is obtained properly.

6 Triangular elements are to be avoided where possible.

7 Use of extreme aspect ratio (e.g. aspect ratio greater than 3) and distorted elements (e.g. element corner angle less than 60 degrees or greater than 120 degrees) are to be avoided.

8 The plates edge of welds in the very fine mesh zone are to be correctly modelled.

9 Where stresses are to be evaluated on a free edge, such as cut-outs of transverse girders, the edge of plating, and hatch corners, the location of the hot spot is to be corner of the plate edge. Beam elements having the same depth as the adjoining plate thickness and the width of 0.01 *mm* are to be arranged at corner of the shell elements edge to calculate the local edge stress values.

10 The very fine mesh is to be arranged so that t the stress in orthogonal direction to the weld line can be readout.

Fig. 9.4.2-1 Transition Area between Coarse and Very Fine Mesh

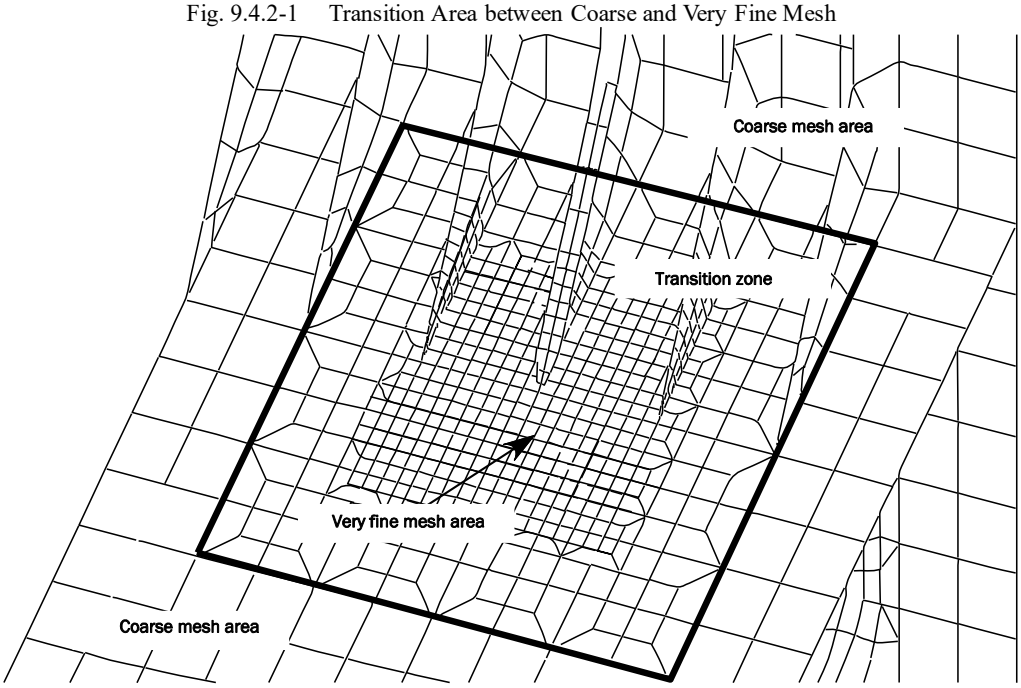

9.4.3 Modelling Procedure

9.4.3.1 Modelling Procedure

1 In addition to the general requirements in 9.4.2, the requirements of 9.4.3 are applicable to modelling of welded connections of the structural details specified in the following requirements.

2 The extent of modelling in the longitudinal direction for longitudinals and other members by shell elements according to 9.4.3 is to be single space of the transverse girder extending to both sides from the hot spot.

9.4.3.2 Bilge Hopper Knuckle Welded Connection

Connections of bilge hopper knuckles are to be modelled in accordance with the following **(1)** to **(5)**:

(1) Any scarfing brackets on the web frame adjoining the inner bottom plating, the first longitudinals away from the knuckle hot spot as well as any carlings and brackets offset from the main frames are to be modelled correctly using shell elements.

(2) Longitudinals further away from the knuckle may be modelled by beam elements.

(3) The inner bottom plating in the bilge hopper tank (overhang) outboard of the girder is to be modelled using shell elements up to the extent of the scarfing bracket.

(4) Away from the scarfing bracket in the longitudinal direction, the inner bottom plating (overhang) may be modelled using line elements of equivalent the area.

(5) Any perforations, such as cut-outs for cabling, pipes and access that are within the first stiffener space from the knuckle point are to be modelled correctly.

9.4.3.3 Horizontal Stringer Heel Connection

Heel connections of horizontal stringers are to be modelled in accordance with the following **(1)** and **(2)**:

(1) Shell elements are to be used for modelling the horizontal stringer heel connection and adjacent stiffeners.

(2) The first longitudinal and vertical stiffeners away from the heel hot spot are to be modelled correctly using shell elements.

9.4.3.4 Lower Stool − Inner Bottom Connection

Connections of the lower stools and inner bottom plating are to be modelled in accordance with the following **(1)** to **(4)**:

(1) Diaphragm webs, brackets inside the lower stool and stiffeners on the stool plating are to be modelled at their actual positions within the extent of the local model.

(2) Shell elements are to be used for modelling of diaphragms and brackets.

(3) The first vertical or horizontal stiffeners on the lower stool plating and the first longitudinals on the inner bottom are to be represented by shell elements.

(4) Other stiffeners may be represented by beam elements.

9.4.3.5 Lower Stool − Corrugated Bulkhead Connection

Connections of lower stools and corrugated bulkheads are to be modelled in accordance with the following **(1)** to **(4)**:

(1) Diaphragm webs, brackets inside the lower stool and stiffeners on the stool plating are to be modelled at their actual positions within the extent of the local model.

(2) Shell elements are to be used for modelling of diaphragms and brackets.

(3) The first vertical or horizontal stiffeners on the lower stool plating are to be represented by shell elements.

(4) Other stiffeners may be represented by beam elements.

9.4.3.6 Side Frame Bracket to Bilge Hopper Plating Connections

Shell elements are to be used for modelling the side frame brackets, bilge hopper plating, and the adjacent stiffeners.

9.4.3.7 Side Frame Bracket to Upper Sloping / Flat Wing Tank Connections

Shell elements are to be used for modelling the side frame brackets, upper sloping or flat bottom plating and adjacent stiffeners.

9.4.3.8 Hatch Corners

1 For rounded corners, a minimum of 15 elements in a 90 degree arc are to be used to describe the curvature of the hatchway radius plating (*See* **Fig. 9.4.3-1**).

2 For elliptical or parabolic corners, a minimum of 15 elements are to be used from the inboard radius end to a point on the edge located at half the longitudinal distance of the semi-major axis.

3 A total of at least 20 elements are to be used for modelling at the elliptical edge of the hatch corner (*See* **Fig. 9.4.3-2**).

4 In application of **-2** and **-3**, the element edge dimensions along the free edge of the radius is to be not less than the thickness of the plating being represented, and not more than 5 times the thickness of the plating.

Fig. 9.4.3-1 Mesh Density for Rounded Hatch Corner

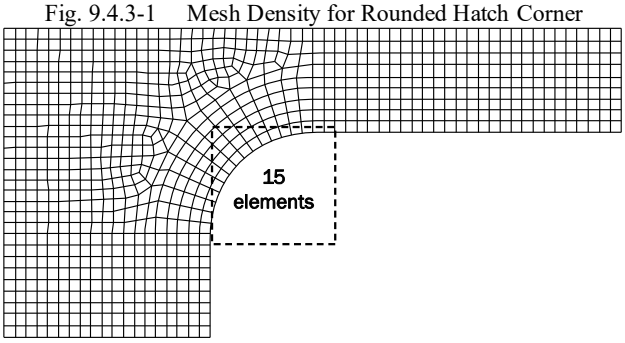

Fig. 9.4.3-2 Mesh Density for Elliptical Hatch Corner

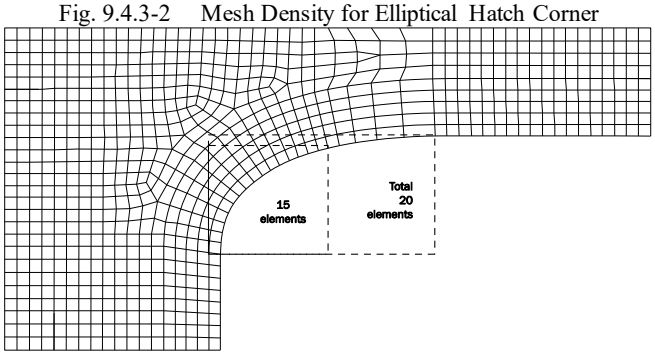

9.4.4 Boundary Conditions and Load Conditions

9.4.4.1 Boundary Conditions

1 Boundary conditions are to be set accordingly to appropriately reproduce the structural responses of the target hold in consideration of the extent of model and loads to be considered, etc.

2 Where a model to be used represents three cargo holds with the target hold in the middle, the standard boundary conditions are to consist of the rigid links at model ends and point constraints.

3 Where the target hold is the foremost cargo hold, the standard boundary conditions are to consist of the rigid link and planar constraints at the aft end of the model. Where the target hold is the aftmost cargo hold, the conditions are to consist of them at the fore end of the model.

9.4.4.2 Load Conditions

1 The load conditions considered are to be in accordance with the following **(1)** to **(3)**:

(1) The loads based upon the requirements specified in 4.7 are to be reproduced.

(2) In applying **-1** above, the external pressure may be simplified by extending the pressure at the middle of the target hold into along the whole longitudinal direction, as deemed appropriate by the Society.

(3) In applying **-1** above, for ships with structure symmetrical about centreline, the assessment may be carried out in accordance with either of the following **(1)** or **(2)**:

(a) The evaluation area is to be limited only to either the port or starboard side half, without omitting the equivalent design waves to be considered.

(b) Both sides of a ship may be assessed, omitting either of the equivalent design waves to be considered based upon waves from the port or starboard side, i.e. *BR*-1*S* may be omitted where *BR*-1P taken into account. Omissions in the similar way may be carried out for any load combinations of *BR*-2*P* and *BR*-2*S*, *BP*-1*P* and *BP*-1*S*, and *BP*-2*P* and *BP*-2*S*.

2 The method of load application to the structural model is to be in accordance with the following **(1)** to **(5)**:

(1) For external pressures, internal pressures due to liquid cargoes and due to bulk cargoes, a constant pressure calculated at the element's centroid is to be applied to the shell element of the loaded surfaces (e.g. outer shells for external pressure and tank or cargo hold boundaries for internal pressure).

(2) Loads due to containers are to be applied to the nearest nodal point from the locations where container comes into contact as the nodal load.

(3) Load application methods that do not fall under **(1)** and **(2)** above are to be as deemed appropriate by the Society.

(4) Unless otherwise specified, the effects of the static and dynamic loads due to the hull structure's self-weight are to be considered.

(5) The vertical and horizontal bending moments act in the target hold are to be adequately adjusted based upon the boundary conditions specified in 9.4.4.1 and the value of moments for each analysis case specified in 4.7, in accordance with a method deemed appropriate by the Society. As for the adjustment, the direct method is to be taken as the standard method.

9.4.5 Hot Spot Stress

9.4.5.1 Stress Range of Resultant Stress and Mean Stress

1 The resultant stress range in the direction orthogonal and parallel to the weld line is to be obtained based on the stresses obtained by the finite element analysis specified in 9.4. The orthogonal direction to the weld line is represented by the *x*-direction and the parallel direction is represented by the *y*-direction.

2 The resultant stress range of type "*a*" hot spot is to be obtained from the following formulas, when conditions "*i*1" and "*i*2" for the same equivalent design wave for the same loading condition (*j*) are considered. In this case, $\Delta\sigma_{ort_j}$ (*N/mm*^{2}) and $\Delta\sigma_{par_j}$ (*N/mm*^{2}) are to be obtained for the respective loading conditions considered. The mean stresses $\sigma_{ort_j_mean}$ (*N/mm*^{2}) and $\sigma_{par_j_mean}$ (*N/mm*^{2}) obtained from $\sigma_{ort_ij_mean}$ (*N/mm*^{2}) and $\sigma_{par_ij_mean}$ (N/mm^2) for the assessment are to be used with the same equivalent design wave of the stress range for the respective resultant stresses $\Delta\sigma_{ort_j}$ (*N/mm*^{2}) and $\Delta\sigma_{par_j}$ (*N/mm*^{2}).

$$\Delta\sigma_{ort_j} = \max_i(\Delta\sigma_{ort_ij})$$

$$\Delta\sigma_{par_j} = \max_i(\Delta\sigma_{par_ij})$$

Where:

$$\Delta\sigma_{ort_ij} = \sqrt{\Delta\sigma_{x_ij}{}^2 + \Delta\tau_{xy_{ij}}{}^2}$$

$$\Delta\sigma_{par_ij} = 0.72\sqrt{\Delta\sigma_{y_ij}{}^2 + \Delta\tau_{xy_{ij}}{}^2}$$

$$\sigma_{ort_ij_mean} = \begin{cases} \mathrm{sign}(\overline{\sigma_{x_ij}})\sqrt{\overline{\sigma_{x_ij}}^2 + \overline{\tau_{xy_ij}}^2} & : \ |\overline{\sigma_{x_ij}}| \geq |\overline{\tau_{xy_ij}}| \\ \mathrm{sign}(\overline{\tau_{xy_ij}})\sqrt{\overline{\sigma_{x_ij}}^2 + \overline{\tau_{xy_ij}}^2} & : \ |\overline{\sigma_{x_ij}}| < |\overline{\tau_{xy_ij}}| \end{cases}$$

$$\sigma_{par_ij_mean} = \begin{cases} \mathrm{sign}(\overline{\sigma_{y_ij}})0.72\sqrt{\overline{\sigma_{y_ij}}^2 + \overline{\tau_{xy_ij}}^2} & : \ |\overline{\sigma_{y_ij}}| \geq |\overline{\tau_{xy_ij}}| \\ \mathrm{sign}(\overline{\tau_{xy_ij}})0.72\sqrt{\overline{\sigma_{y_ij}}^2 + \overline{\tau_{xy_ij}}^2} & : \ |\overline{\sigma_{y_ij}}| < |\overline{\tau_{xy_ij}}| \end{cases}$$

sgn(X): Positive or negative sign of stress X (positive when normal stress is tension and positive when shear stress is in CCW direction).

$\Delta\sigma_{x_ij}$: Stress range (*N/mm*^{2}) in the *x*-direction in the *x-y* coordinate system of the equivalent design wave "*i*" for loading condition "*j*" according to the following formula:

$$\Delta\sigma_{x_ij} = |\sigma_{x_i1j} - \sigma_{x_i2j}|$$

$\Delta\sigma_{y_ij}$: Stress range (*N/mm*^{2}) in the *y*-direction in the *x-y* coordinate system of the equivalent design wave "*i*" for loading condition "*j*" according to the following formula:

$$\Delta\sigma_{y_ij} = |\sigma_{y_i1j} - \sigma_{y_i2j}|$$

$\Delta\tau_{xy_ij}$: Stress range of shear stress (*N/mm*^{2}) in the *x-y* coordinate system of the equivalent design wave "*i*" for loading condition "*j*" according to the following formula:

$$\Delta\tau_{xy_ij} = |\tau_{xy_i1j} - \tau_{xy_i2j}|$$

$\overline{\sigma_{x_ij}}$: Mean stress (*N/mm*^{2}) in the *x*-direction in the *x-y* coordinate system of the equivalent design wave "*i*" for loading condition "*j*" according to the following formula:

$$\overline{\sigma_{x_ij}} = \frac{\sigma_{x_i1j} + \sigma_{x_i2j}}{2}$$

$\overline{\sigma_{y_ij}}$: Mean stress (*N/mm*^{2}) in the *y*-direction in the *x-y* coordinate system of the equivalent design wave "*i*" for loading condition "*j*" according to the following formula:

$$\overline{\sigma_{y_ij}} = \frac{\sigma_{y_i1j} + \sigma_{y_i2j}}{2}$$

$\overline{\tau_{xy_ij}}$: Mean stress (*N/mm*^{2}) of shear stress in the *x-y* coordinate system of the equivalent design wave "*i*" for loading condition "*j*" according to the following formula:

$$\overline{\tau_{xy_ij}} = \frac{\tau_{x_i1j} + \tau_{x_i2j}}{2}$$

3 The resultant stress range of type "*b*" hot spot is to be obtained from the following formulas, when conditions "*i*1" and "*i*2" for the same equivalent design wave in the same loading condition (*j*) are considered. In this case, $\Delta\sigma_{ort_j}$ (*N/mm*^{2}) is to be obtained for

the respective loading conditions considered. The mean stresses $\sigma_{ort_j_mean}$ (N/mm^2) obtained from $\sigma_{ort_ij_mean}$ (N/mm^2) for the assessment is to be used with the same equivalent design wave for the stress range for the respective resultant stress $\Delta\sigma_{ort_j}$ (N/mm^2).

$$\Delta\sigma_{ort_j} = \max_i(\Delta\sigma_{ort_ij})$$

Where:

$$\Delta\sigma_{ort_ij} = |\Delta\sigma_{a_ij}|$$

$$\sigma_{ort_ij_mean} = \overline{\sigma_{a_ij}}$$

$\Delta\sigma_{a_ij}$: Stress range (N/mm^2) in the axial direction of the equivalent design wave "*i*" for loading condition "*j*" according to the following formula:

$$\Delta\sigma_{a_ij} = |\sigma_{a_i1j} - \sigma_{a_i2j}|$$

$\overline{\sigma_{a_ij}}$: Mean stress (N/mm^2) in the axial direction of the equivalent design wave "*i*" in loading condition "*j*" according to the following formula:

$$\overline{\sigma_{a_ij}} = \frac{\sigma_{a_i1j} + \sigma_{a_i2j}}{2}$$

9.4.5.2 Hot Spot Locations and Stress Readout Points

1 The hot spot locations and stress readout points for welded joints are to be in accordance with the following **(1)** to **(4)** depending on the type of hot spots. Examples of the types of welded joints and the joints reproduced using shell models are shown in **Fig. 9.4.5-1**.

(1) Type a1 hot spot (*See* **Fig. 9.4.5-2** to **Fig. 9.4.5-4**)

(a) The location of type a1 hot spot is the position shifted x_{shift} (mm) in the direction orthogonal to the weld line on the plates surface from the position of the node at the intersection of the shell elements of the plates. When assessing hot spot stress, the hot spot stress is obtained by reading out the stresses at positions shifted $0.5t_{n25}$ (mm) and $1.5t_{n25}$ (mm) in the direction orthogonal to the weld line from the hot spot location, based on the thickness of the plates for which hot spot stress is to be assessed. However, when using a mesh size smaller than half the thickness in accordance with **9.4.2.7-1(4)**, the hot spot stress is obtained by reading out the stress at the positions shifted $0.4t_{n25}$ (mm) and $1.0t_{n25}$ (mm) in the direction orthogonal to the weld line from the hot spot.

(b) x_{shift} is to be obtained from the following formula:

Cases other than $\phi = 90°$

When continuous plates are assessed:

$$x_{shift} = \frac{t_{2n25}}{2\sin\phi} + \frac{t_{1n25}}{2\tan\phi}\ (mm)$$

When discontinuous plates are assessed:

$$x_{shift} = \frac{t_{2n25}}{2\sin\phi}\ (mm)$$

Case $\phi = 90°$

$$x_{shift} = \frac{t_{2n25}}{2}\ (mm)$$

t_{1n25}: Thickness (mm) of plate containing the hot spot to be assessed (main plate)

t_{2n25}: Thickness (mm) of plate intersecting the main plate (attached plate)

ϕ: Angle (deg) between attached plate and main plate

(2) Type a2 hot spot (*See* **Fig. 9.4.5-5**)

The location of type a2 hot spot is the position of the node at the intersection between the shell element of a plate and the shell element edge face of a plate, gusset plate or bracket. The hot spot stress is obtained by reading out the stress at positions shifted $0.5t_{n25}$ (mm) and $1.5t_{n25}$ (mm) in the direction extending to the gusset plate or bracket from the hot spot, based on the thickness of the plate for which hot spot stress is to be assessed. However, when using a mesh size smaller than half the thickness in accordance with **9.4.2.7-1(4)**, the hot spot stress is obtained by reading out the stress at the positions shifted $0.4t_{n25}$ (mm) and $1.0t_{n25}$ (mm) in the direction extending to the gusset plate or bracket from the hot spot.

(3) Type b1 hot spot (*See* **Fig. 9.4.5-6**)

(a) The location of type b1 hot spot is the position shifted x_{shift} (mm) along the shell element edge face of the plate, gusset plate, or bracket from the position of the node at the intersection between the shell element edge face of a plate, gusset plate or bracket and the shell element of the plate. When assessing hot spot stress, the hot spot stress is obtained by reading out the stresses at position shifted 5 mm and 15 mm along the shell element edge face of the plate, gusset plate, or bracket

from the hot spot.

(b) x_{shift} is taken as follows:

$$x_{shift} = \frac{t_{2n25}}{2\sin\phi}\ (mm)$$

ϕ: Angle (deg) between gusset plate edge and plate intersecting the considered plate (attached plate)

t_{2n25}: Thickness (mm) of plate intersecting the considered plate (attached plate)

(4) Type b2 hot spot (*See* **Fig. 9.4.5-7**)

(a) The location of type b2 hot spot is the position of the node at the intersection between the shell element edge face of a plate, gusset plate, or bracket and the shell element of a plate. When assessing the hot spot stress at the corner of plate edge or the plate edge face, the hot spot stress is obtained by reading out the stresses at positions shifted 5 mm and 15 mm along the corner of plate edge or the plate edge face from the hot spot. When assessing the hot spot at a weld toe at the corner of plate edge welded by butt joint, the hot spot stress is obtained by reading out the stresses of two elements adjoining the hot spot.

(b) Type b2-1 hot spot stress is to be corrected by multiplication with the following factor:

$$f_{\mathrm{HSS}} = 0.436 \cdot \left(\frac{t_{2-n25}}{t_{1-n25}} - 1\right)^2 + 1$$

t_1: Thickness (mm) of plating to be assessed

t_2: Thickness (mm) of plating not to be assessed

Fig. 9.4.5-1 Types of Welded Joints and Corresponding Shell Models

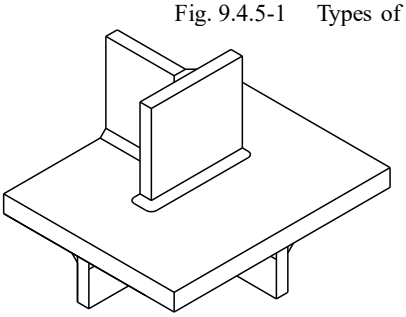

Cruciform joint

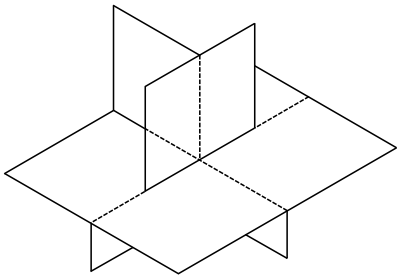

Shell model reproducing cruciform joint

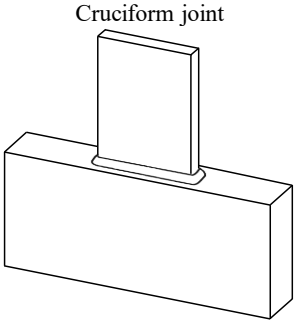

In-plane gusset joint

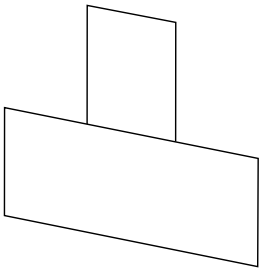

Shell model reproducing in-plane gusset joint

Fig. 9.4.5-2 Location and Readout Method for Type "a1-0" Hot Spot Stress

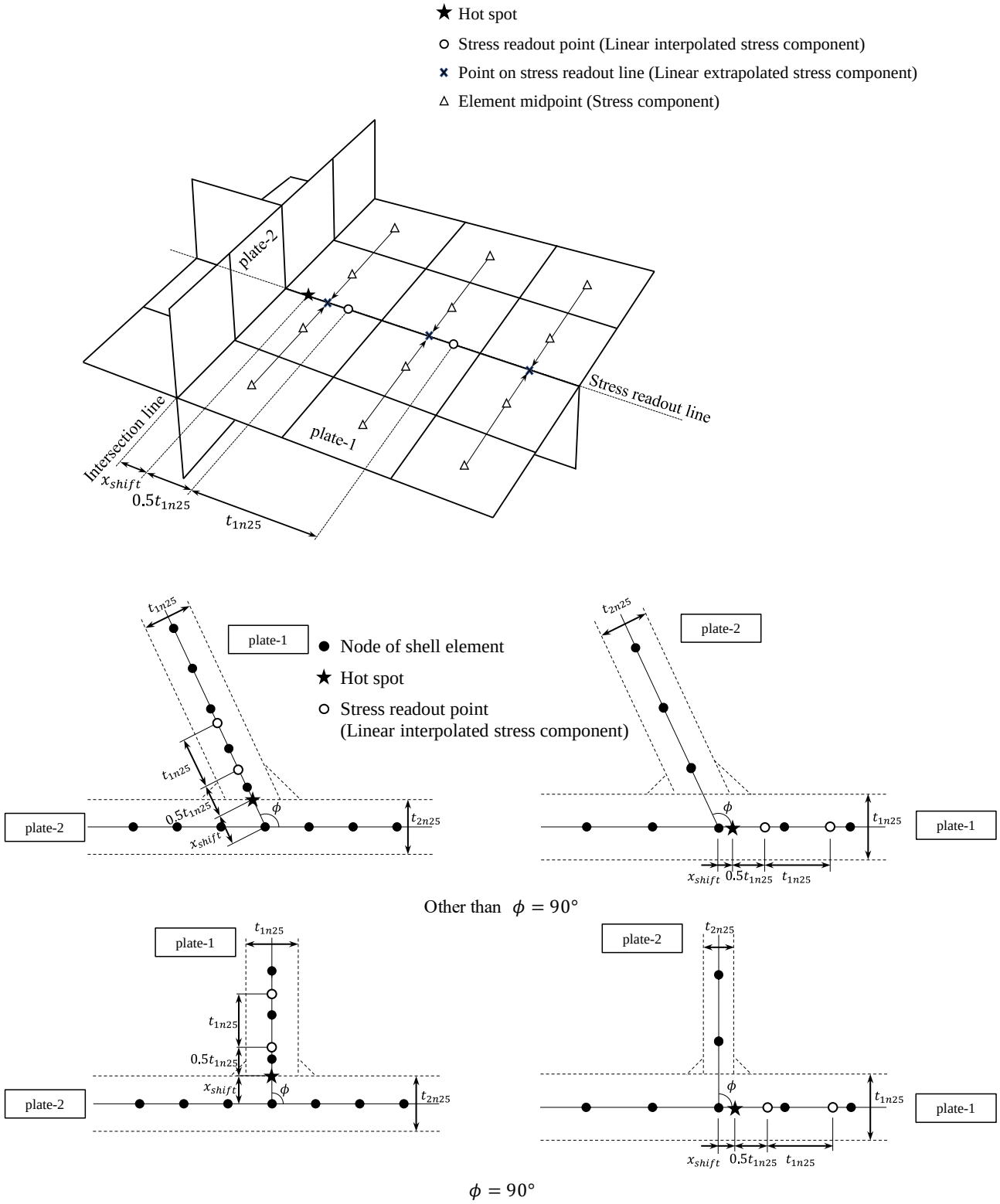

Fig. 9.4.5-3 Location and Readout Method for Type "a1-1" Hot Spot Stress

★ Hot spot
● Node of shell element
○ Stress readout point (Linear interpolated stress component)
× Point on stress readout line (Linear extrapolated stress component)
△ Element midpoint (Stress component)

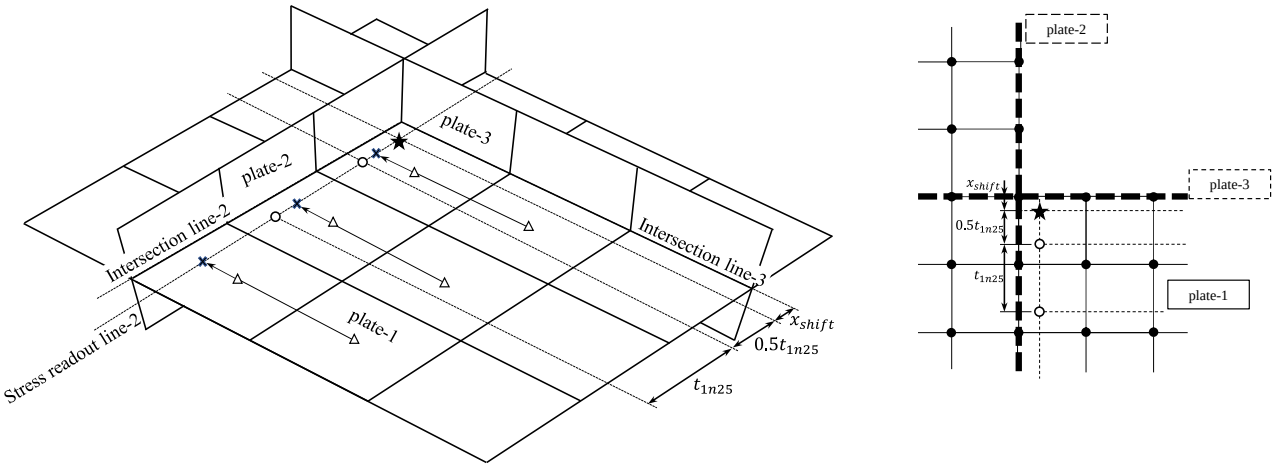

★ Hot spot
● Node of shell element
○ Stress readout point (Linear interpolated stress component)
× Point on stress readout line (Linear extrapolated stress component)
△ Element midpoint (Stress component)

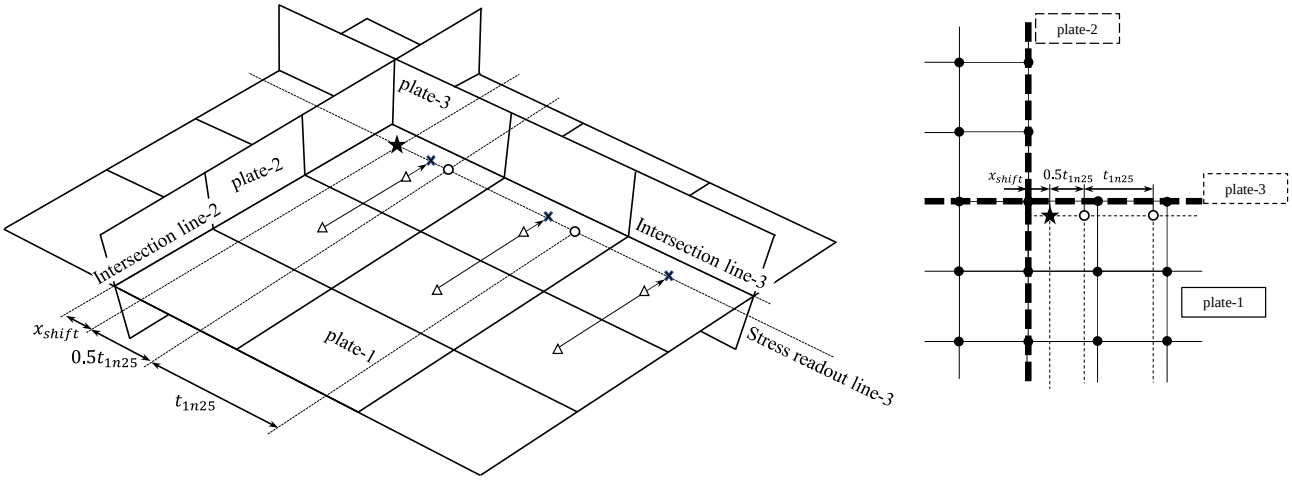

Fig. 9.4.5-4 Location and Readout Method for Type "*a*1-2" Hot Spot Stress

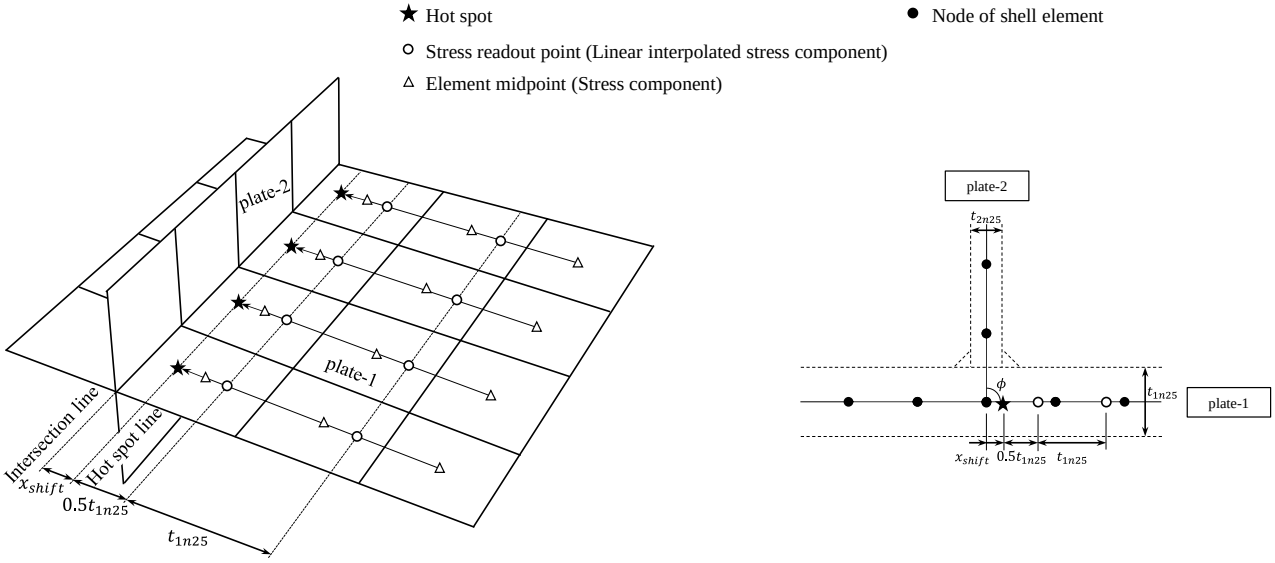

Fig. 9.4.5-5 Location and Readout Method for Type "*a*2" Hot Spot Stress

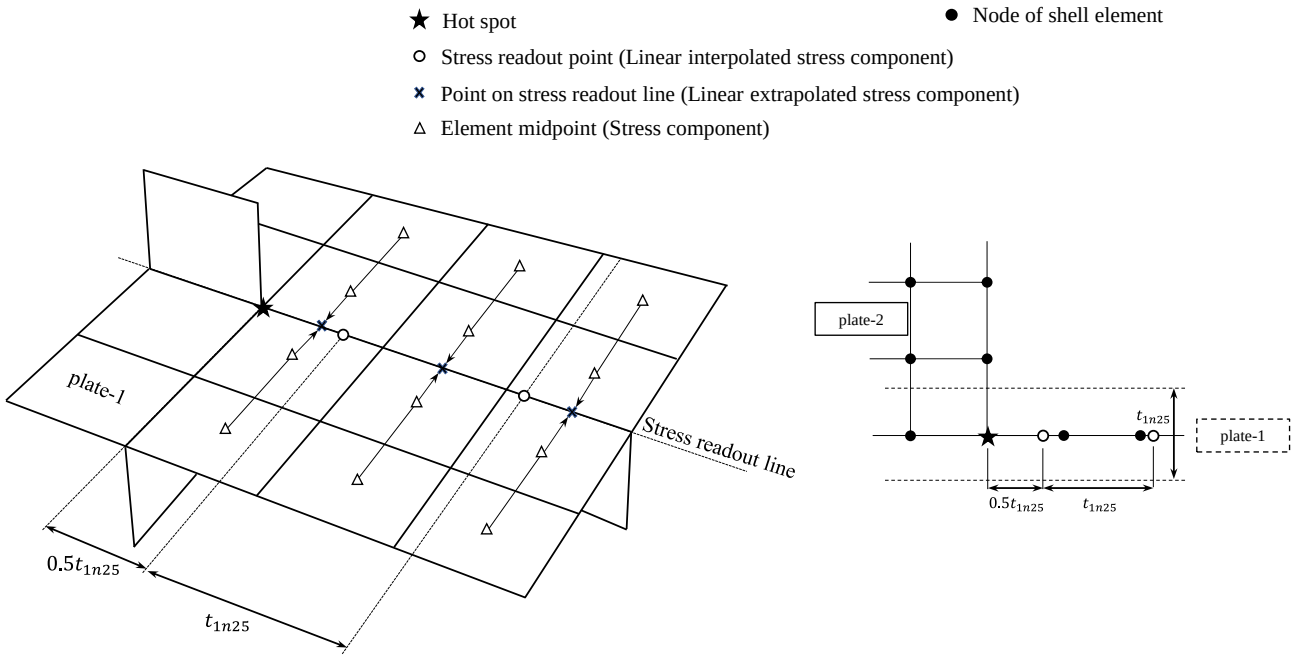

Fig. 9.4.5-6 Location and Readout Method for Type b1 Hot Spot Stress

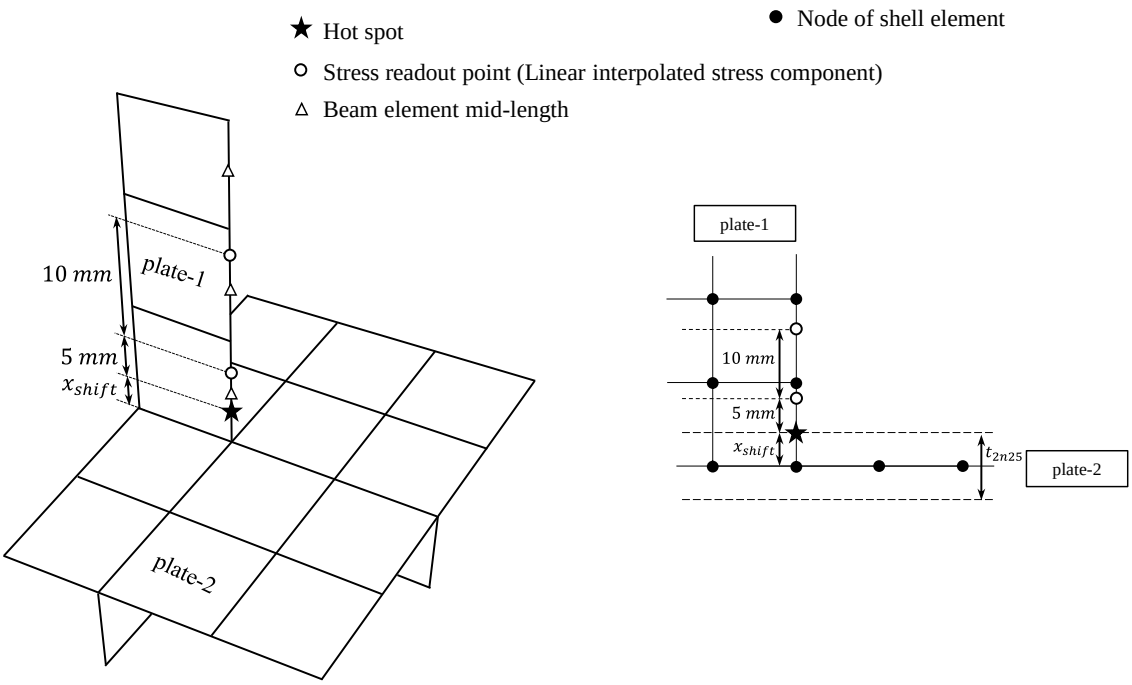

Fig. 9.4.5-7 Location and Readout Method for Type "*b*2-0" and Type "*b*2-1" Hot Spot Stress

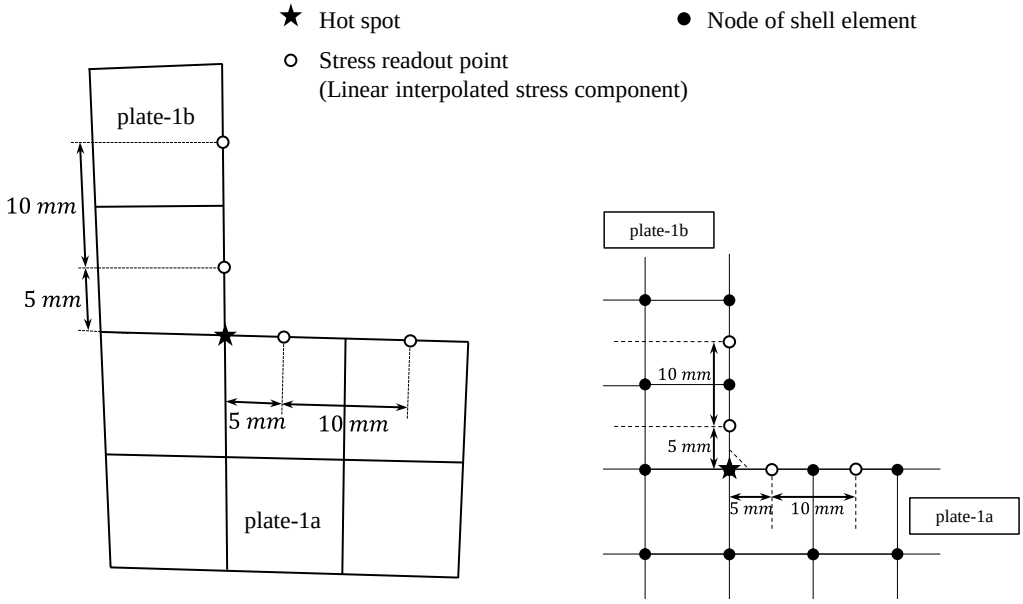

9.4.5.3 Stress Readout Method

1 The stress readout method for obtaining the type "*a*1" and type "*a*2" hot spots is to be in accordance with the following **(1)** to **(4)**:

(1) Stress readout method for type "*a*1-0" (*See* **Fig. 9.4.5-2**)

(a) The stress readout line is on the girder or stiffener supporting the intersection of plate joint.

(b) The stress components on the stress readout line is to be obtained by linear extrapolation of the stress components of two elements midpoint on left and right side of the stress readout line.

(c) The stress components at the points on stress readout line is to be obtained by linear interpolation of the stress components specified in **(b)** at two points adjacent to the points on stress readout line.

(d) The hot spot stress is to be obtained according to the procedure in **9.4.5.4**, and the stress on left and right side of the stress readout line, whichever is larger, is to be used for the assessment.

(2) Stress readout method for type "*a*1-1" (*See* **Fig. 9.4.5-3**)

(a) The stress readout lines are to be located on the surface of the considered plate shifted x_{shift} (mm) from the intersection lines of two surrounding plates and the considered plate at the corner.

(b) The stress components on the stress readout line are to be obtained by linear extrapolation of the stress components of two elements midpoint on inner side of the surrounding plates.

(c) The stress components at the points on stress readout line is to be obtained by linear interpolation of the stress components specified in **(b)** at two points adjacent to the points on stress read out line.

(d) The hot spot stress is to be obtained according to the procedure in **9.4.5.4**.

(3) Stress readout method for type "*a*1-2" (*See* **Fig. 9.4.5-4**)

(a) The hot spot line is to be located on the surface of the considered plate shifted x_{shift} (mm) from the intersection line of the intersection of plate joint.

(b) The stress readout line is the line passing through the element midpoint on the surface of the considered plate at the intersection of plate joint, and is to be orthogonal to the weld line.

(c) The stress components at the points on stress read out line is to be obtained by linear interpolation of the stress at two points adjacent to the points on stress read out line.

(d) All the hot spot stresses on the hot spot line are to be obtained according to the procedure in **9.4.5.4**.

(e) The hot spot location for the assessment is to be the position of maximum fatigue damage to the intersection of plate joint.

(4) Stress readout method for type "*a*2" (*See* **Fig. 9.4.5-5**)

(a) The stress readout line is to be in the direction extending to the gusset plate extension, and is to be on the girder or stiffener supporting the intersection of plate joint.

(b) The stress components on the stress read out line is to be obtained by linear extrapolation of the stress components of two elements midpoint on the left and right side of the stress readout line.

(c) The stress components at the points on stress readout line is to be obtained by linear interpolation of the stress components specified in **(b)** at two points adjacent to the points on stress readout line.

(d) The hot spot stress is to be obtained according to the procedure in **9.4.5.4**, and the stress on left and right side of the stress readout line, whichever is larger, is to be used for the assessment.

2 To readout the stress for type "*b*1" and type "*b*2" hot spots and for hot spots at the free edge of the base material, beam elements having the same thickness as that of the adjoining plating and the width of 0.01 *mm* is to be placed at the shell elements edge face. The stress at the corner of beam elements edge is to be used for obtaining the hot spot stress at the corner of plate edge, and the axial stress of beam elements is to be used for obtaining the hot spot stress at the plate edge face. In this case, the stress readout method for obtaining type "*b*1" and type "*b*2" hot spot stress, and obtaining the hot spot stress at the free edge of the base material is to be in accordance with the following **(1)** to **(5)**. The stress on two elements surface in the direction orthogonal to the free edge of the plate may be obtained by linear extrapolation to the free edge, and the stresses at the points on stress readout line in **9.4.5.2-1(3)** and **(4)** may be obtained by linear interpolation to obtain the hot spot stress of type "*b*1", type "*b*2" and the base material.

(1) Stress readout method for type "*b*1" (*See* **Fig. 9.4.5-6**)

(a) The stress readout line is to be located at the corner of gusset plate or bracket edge.

(b) The stress components at the points on stress readout line is to be obtained by linear interpolation of the stress components of two beam elements mid-length adjacent to the points on stress read out line.

(c) The hot spot stress is to be obtained according to the procedure in **9.4.5.4**.

(2) Stress readout method for type "*b*2-0" (*See* **Fig. 9.4.5-7**)

(a) The stress readout line is to be located at the corner of gusset plate, bracket or plate edge.

(b) The stress components at the points on stress readout line is to be obtained by linear interpolation of the stress components of two beam elements mid-length adjacent to the points on stress read out line.

(c) The hot spot stress is to be obtained according to the procedure in **9.4.5.4**.

(3) Stress readout method for type "*b*2-1" (*See* **Fig. 9.4.5-7**)

(a) The stress read out line is to be located at the gusset plate, bracket or plate edge face.

(b) The stress components at the points on stress readout line is to be obtained by linear interpolation of the axial stress components of two beam elements mid-length adjacent to the points on stress readout line.

(c) The hot spot stress is to be obtained according to the procedure in 9.4.5.4.

(4) Stress readout method for type "*b*2-2"

(a) The stress readout point (the hot spot location for the assessment) is to be the weld toe at the corner of plate edge welded by butt joint.

(b) The hot spot stress is to be obtained by linear interpolation of the stress components of two beam elements mid-length adjacent to the hot spot location.

(5) Stress readout method for base material

(a) The stress readout point is to be the position of maximum stress of the beam element.

(b) The hot spot stress is the stress of the beam element at the corner of plate edge adjacent to the stress read out point.

3 When reading out the stress to obtain the hot spot stress at hot spots in a curved plate, the stress readout method specified in **-1** is to be applied, assuming that the plate is located in the same plane (*See* **Fig. 9.4.5-8**). Interpolation point and extrapolation point are defined in the straight coordinate axis.

Fig. 9.4.5-8 Hot Spot Stress Readout Method and Point for Curved Plate

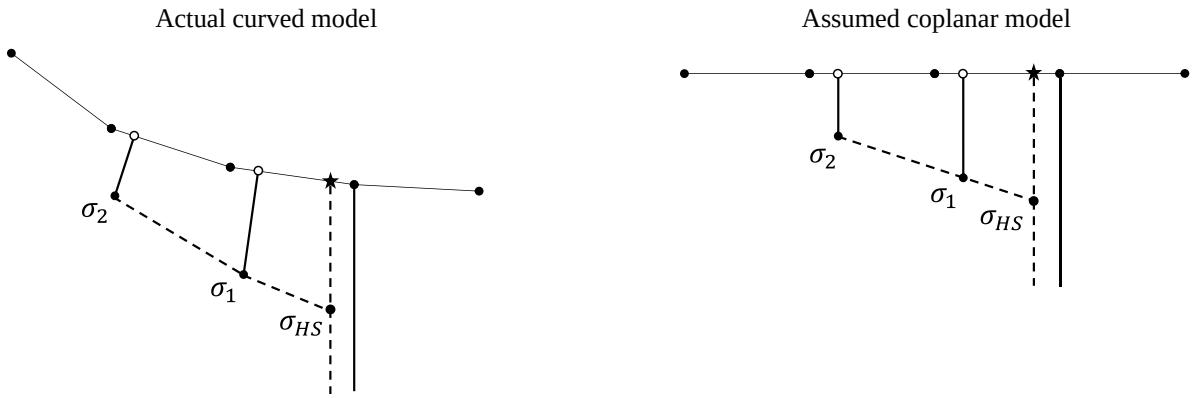

9.4.5.4 Hot Spot Stress

1 The hot spot stress is to be obtained by linear extrapolation of the stress at the point on stress readout line specified in 9.4.5.2 to the hot spot location specified in 9.4.5.2.

2 The hot spot stress is to be obtained from the following formula:

$\sigma_{HS} = 1.5\sigma_{0.5} - 0.5\sigma_{1.5}$ (*N/mm*^{2})

$\sigma_{0.5}$: Stress (*N/mm*^{2}) at position shifted $0.5t_{n25}$ (*mm*) or 5 *mm* from hot spot

$\sigma_{1.5}$: Stress (*N/mm*^{2}) at position shifted $1.5t_{n25}$ (*mm*) or 15 *mm* from hot spot

3 Notwithstanding the requirements specified in **-2**, the hot spot stress is to be obtained from the following formula when using a mesh size smaller than half the plate thickness in accordance with the requirements in 9.4.2.7-1(4).

$\sigma_{HS} = 1.67 \cdot (1.0\sigma_{0.4} - 0.4\sigma_{1.0})$ (*N/mm*^{2})

$\sigma_{0.4}$: Stress (*N/mm*^{2}) at position shifted $0.4t_{n25}$ (*mm*) from hot spot

$\sigma_{1.0}$: Stress (*N/mm*^{2}) at position shifted $1.0t_{n25}$ (*mm*) from hot spot

4 Notwithstanding the requirements specified in **-2** and **-3** above, when the hot spot on the tank cover at the intersection of the tank cover and the upper deck of ships carrying liquefied gases in bulk (independent spherical tanks), and the hot spot on the coaming at the intersection of the coaming of the tank dome opening and the upper deck of ships carrying liquefied gases in bulk (independent prismatic tanks) are to be evaluated, the hot spot stress for $\Delta\sigma_{ort_j}$ is obtained from the following formula. The stress at x_{shift} position is to be obtained according to the procedure specified in **-2** and **-3** above:

$\sigma_{HS} = [\sigma_{membrane}(x_{shift}) + 0.60 \cdot \sigma_{bending}(x_{shift})]$ (*N/mm*^{2})

$\sigma_{membrane}(x_{shift})$: Membrane stress (*N/mm*^{2}) at x_{shift} position

$\sigma_{bending}(x_{shift})$: Bending stress (*N/mm*^{2}) at x_{shift} position obtained from the following formula:

$\sigma_{bending}(x_{shift}) = \sigma_{surface}(x_{shift}) - \sigma_{membrane}(x_{shift})$

$\sigma_{surface}(x_{shift})$: Surface stress (*N/mm*^{2}) at x_{shift} position

9.5 Fatigue Strength Assessment

Symbols

For symbols not specified in this 9.5, refer to 1.4.

(i) Suffix which denotes wave condition *HM*, *FM*, *BR-P*, *BR-S*, *BP-P* or *BP-S* specified in 4.7.2.2:

"i1" denotes wave condition *HM*-1, *FM*-1, *BR*-1*P*, *BR*-1*S*, *BP*-1*P* or *BP*-1*S*

"i2" denotes wave conditions *HM*-2, *FM*-2, *BR*-2*P*, *BR*-2*S*, *BP*-2*P* or *BP*-2*S*

(j) Suffix which denotes loading condition

T_D: Design life, to be taken as 25 *years*

T_{FD}: Fatigue design life, not to be taken less than 25 *years*

η_{LC}: Number of loading conditions

f_{thick}: Correction factor for thickness effect given in 9.5.3.3

f_{PWT} : Correction factor for post-weld treatment by grinding. When considering fatigue strength improvement, 2.2 is used for *S-N* Curve for in-air environment and 1.9 is used for *S-N* curve for corrosive environment. When not considering fatigue strength improvement, 1.0 is used.

$\Delta\sigma_{eq,(j)}$: Equivalent stress range (N/mm^2), as given in 9.5.2.2

σ_Y : Specified minimum yield stress (N/mm^2) of the material

9.5.1 General

9.5.1.1 General

1 This 9.5 provides the requirements for the fatigue strength assessment method using the hot spot stresses obtained in 9.3 and 9.4.

2 The fatigue strength assessment specified in this 9.5 is based on Miner's linear cumulative damage rule.

3 Total cumulative fatigue damage is to be calculated for all loading conditions by using each fatigue damage in the in-air environment where the coating is effective and in the corrosive environment where the coating is not effective, considering the ratio of period of each environment.

9.5.2 Reference Stress for Fatigue Strength Assessment

9.5.2.1 Hot Spot Stress Range

The hot spot stress range $\Delta\sigma_{HS_R,(j)}$ (N/mm^2) for loading condition (j) is to be obtained as follows:

$$\Delta\sigma_{HS_R,(j)} = f_R \cdot \Delta\sigma_{HS,(j)}$$

f_R: Correction factor corresponding to the wave environment, to be in accordance with the following sea states.

(1) 0.56 for worldwide

(2) 0.85 for North Atlantic

$\Delta\sigma_{HS,(j)}$: Hot spot stress range (N/mm^2) for loading condition (j), to be obtained as follows:

(1) As given in 9.3.2

(2) $\Delta\sigma_{ort_j}$ and $\Delta\sigma_{par_j}$ specified in 9.4.5. In this case, fatigue damage is to be calculated for the respective stress ranges.

9.5.2.2 Equivalent Stress Range

The equivalent stress range $\Delta\sigma_{eq,(j)}$ (N/mm^2) corresponding to the stress range $\Delta\sigma_{hs,(j)}$ (N/mm^2) in each loading condition is to be obtained from the following formula:

$$\Delta\sigma_{eq,(j)} = \Delta\sigma_{hs,(j)}{}^{\frac{3}{4}}\sigma_{max,(j)}{}^{\frac{1}{4}}$$

$\Delta\sigma_{hs,(j)}$: Hot spot stress range (N/mm^2) for loading condition (j) (*See* 9.5.4.2)

$\sigma_{max,(j)}$: Maximum hot spot stress (N/mm^2) for loading condition (j) taken as follows. Where $\Delta\sigma_{hs,(j)}$ is greater than $2\sigma_Y$, $\sigma_{max,(j)}$ is to be $\Delta\sigma_{hs,(j)}/2$:

$$\sigma_{max,(j)} = \min\left(\sigma_Y, \max\left(0, \Delta\sigma_{hs,(j)} - \sigma_Y, \sigma_{res} + \sigma_{mean,(j)} + \frac{\Delta\sigma_{hs,(j)}}{2}\right)\right)$$

σ_{res}: Residual stress (N/mm^2), as obtained from the following formula. Where $1.25\Delta\sigma_{HS_R,u}$ is greater than σ_Y or $1.25\Delta\sigma_{HS_R,l}$ is greater than σ_Y, $\sigma_{res} + \sigma_{mean,(j)}$ is to be 0.

$$\sigma_{res} = \begin{cases} \dfrac{1.25(\Delta\sigma_{HS_R,l} - \Delta\sigma_{HS_R,u}) - (\sigma_{mean,l} + \sigma_{mean,u})}{2} & : \quad \sigma_{max,u} - \sigma_{min,l} \geq 2\sigma_Y \\ \sigma_Y - 1.25\Delta\sigma_{HS_R,u} - \sigma_{mean,u} & : \quad \sigma_{max,u} > \sigma_Y \text{ and } \sigma_{min,l} \geq -\sigma_Y \\ 1.25\Delta\sigma_{HS_R,l} - \sigma_Y - \sigma_{mean,l} & : \quad \sigma_{max,u} \leq \sigma_y \text{ and } \sigma_{min,l} < -\sigma_Y \\ \sigma_{res,0} & : \quad \sigma_{max,u} \leq \sigma_y \text{ and } \sigma_{min,l} \geq -\sigma_Y \end{cases}$$

$\sigma_{max,u}$: Maximum stress (N/mm^2) for all loading conditions taken as follows:

$$\sigma_{max,u} = \max_j \left(\sigma_{mean,(j)} + \frac{2.5\Delta\sigma_{HS_R,(j)}}{2} \right)$$

$\sigma_{mean,u}$: Hot spot mean stress (N/mm^2) under the same loading condition as $\sigma_{\mathrm{max,u}}$

$\Delta\sigma_{HS_R,u}$: Hot spot stress range (N/mm^2) under the same loading condition as $\sigma_{\mathrm{max,u}}$

$\sigma_{min,l}$: Minimum stress (N/mm^2) for all loading conditions taken as follows:

$$\sigma_{min,l} = \min_j \left(\sigma_{mean,(j)} - \frac{2.5\Delta\sigma_{HS_R,(j)}}{2} \right)$$

$\sigma_{mean,l}$: Hot spot mean stress (N/mm^2) for the same loading condition as $\sigma_{\mathrm{min},l}$

$\Delta\sigma_{HS_R,l}$: Hot spot stress range (N/mm^2) for the same loading condition as $\sigma_{\mathrm{min},l}$

$\sigma_{res,0}$: Initial residual stress (N/mm^2) given as follows:

For the base material: $\sigma_{res,0} = 0$

For welded joints: $\sigma_{res,0} = 0.3\sigma_Y$

$\sigma_{mean,(j)}$: Hot spot mean stress (N/mm^2) due to static load under the dominant wave condition for loading condition (j)

9.5.3 *S-N* Curve

9.5.3.1 Design *S-N* Curve for In-Air Environment

1 The *S-N* curve used in fatigue strength assessment of the base material for in-air environment is as follows:

$$N_{air}(\Delta\sigma_{eq}) = \begin{cases} C_{BS} \cdot \dfrac{\sigma_Y}{\sigma_{Y,MS}} \cdot \Delta\sigma_{eq}{}^{-4} & : \quad N_{air}(\Delta\sigma_{eq}) \leq 10^7 \left(\text{or } \Delta\sigma_{eq} \geq \left(\dfrac{C_{BS}}{10^7} \cdot \dfrac{\sigma_Y}{\sigma_{Y,MS}} \right)^{0.25} \right) \\ \sqrt{\dfrac{1}{10^7} \left(\dfrac{C_{BS} \cdot \sigma_Y}{\sigma_{Y,MS}} \right)^3} \cdot \Delta\sigma_{eq}{}^{-6} & : \quad N_{air}(\Delta\sigma_{eq}) > 10^7 \left(\text{or } \Delta\sigma_{eq} < \left(\dfrac{C_{BS}}{10^7} \cdot \dfrac{\sigma_Y}{\sigma_{Y,MS}} \right)^{0.25} \right) \end{cases}$$

$\sigma_{Y,MS}$: Specified minimum yield stress (N/mm^2) of mild steel, taken as $\sigma_{Y,MS} = 235$.

$$C_{BS} = \frac{1.01 \times 10^{15}}{(f_{thick} \cdot f_{surf})^4}$$

f_{surf}: Correction factor for free edge corner of the member, as given in 9.5.3.4.

2 The *S-N* curve used in fatigue strength assessment of welded joints for in-air environment is as follows:

$$N_{air}(\Delta\sigma_{eq}) = \begin{cases} C_D \cdot \sigma_Y \cdot \Delta\sigma_{eq}{}^{-4} & : \quad N_{air}(\Delta\sigma_{eq}) \leq 10^7 \left(\text{or } \Delta\sigma_{eq} \geq \left(\dfrac{C_D}{10^7} \cdot \sigma_Y \right)^{0.25} \right) \\ \sqrt{\dfrac{(C_D \cdot \sigma_Y)^3}{10^7}} \cdot \Delta\sigma_{eq}{}^{-6} & : \quad N_{air}(\Delta\sigma_{eq}) > 10^7 \left(\text{or } \Delta\sigma_{eq} < \left(\dfrac{C_D}{10^7} \cdot \sigma_Y \right)^{0.25} \right) \end{cases}$$

$$C_D = \frac{f_{PWT} \cdot 1.52 \times 10^{12}}{f_{thick}{}^3}$$

9.5.3.2 Design *S-N* Curve for Corrosive Environment

1 The *S-N* curve used in fatigue strength assessment of the base material for the corrosive environment is as follows:

$$N_{cor}(\Delta\sigma_{eq}) = \frac{C_B}{2} \cdot \frac{\sigma_Y}{\sigma_{Y,MS}} \cdot \Delta\sigma_{eq}{}^{-4}$$

$\sigma_{Y,MS}$, C_B: As specified in 9.5.3.1-1.

2 The *S-N* curve used in fatigue strength assessment of welded joints for the corrosive environment is as follows:

$$N_{cor}(\Delta\sigma_{eq}) = \frac{C_D}{2} \cdot \sigma_Y \cdot \Delta\sigma_{eq}{}^{-4}$$

C_D: As specified in 9.5.3.1-2.

9.5.3.3 Thickness Effect

1 This 9.5.3.3 is to be applied to the base material, butt welded joints and orthogonal welded joints. However, thickness effect is not to be applied to type "*b*1" and type "*b*2" hotspots.

2 The correction factor f_{thick} for the thickness effect is taken as follows:

$$f_{thick} = \begin{cases} 1.0 & : \quad t_{n25} < 22 \\ \left(\frac{t_{n25}}{22}\right)^n & : \quad 22 \le t_{n25} \end{cases}$$

t_{n25}: Thickness (mm) of the member the fatigue strength assessment applied. For 90° attachments, i.e. cruciform welded joints, transverse T-joints and plates with transverse attachment, the thickness is to be taken as:

$$t_{n25} = \min\left(\frac{d}{2}, t_{1n25}\right)$$

n: Thickness exponent provided in **Table 9.5.3-1** and **Table 9.5.3-2** respectively for welded joints and non-welded joints.

d: Toe distance (mm), as shown in **Fig. 9.5.3-1**, taken as:

$$d = t_{2n25} + 2l_{leg}$$

t_{2n25}: Thickness (mm) of plate attached to the plate where the hot spot is assessed, as shown in **Fig. 9.5.3-1**

l_{leg}: Fillet weld leg length (mm)

t_{1n25}: Thickness (mm) of plate with weld toe which is hot spot, as shown in **Fig. 9.5.3-1**

Fig. 9.5.3-1 Toe Distance for Cruciform Welded Joints, Transverse *T*-joints and Plates with Transverse Attachment

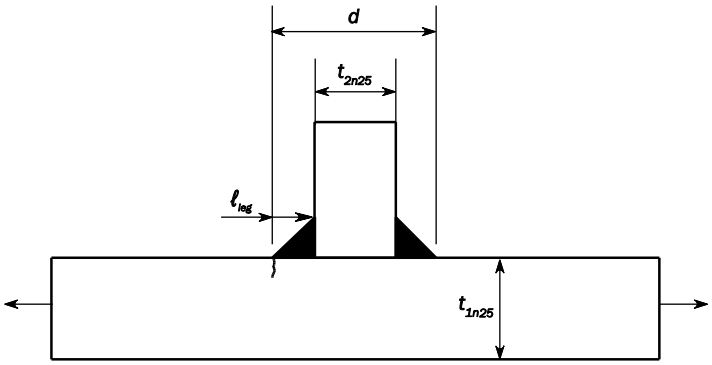

Table 9.5.3-1 Plate Thickness Exponents for Welded Joints

No	Joint category description	Geometry	Condition	n
1	Cruciform joints, transverse T-joints and plates with transverse attachments	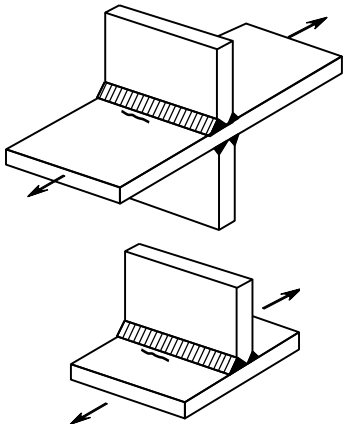	As-welded	0.25
			Weld toe treated by post-weld improvement method	0.2
2	Transverse butt welds		As-welded	0.2
			Ground flush or weld toe treated by post-weld improvement method	0.1
3	Welds in load direction or attachments to plate edges in load direction (Where stress range is determined from σ_{par} in 9.4.5.1.)	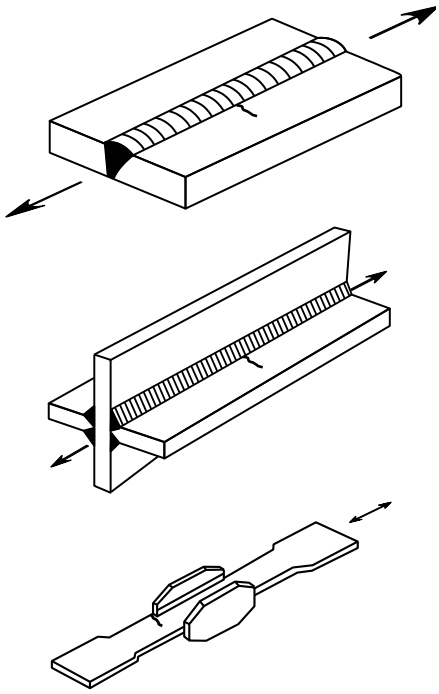	All	0.1
4	Attachments in load direction on the flat bar or bulb profile	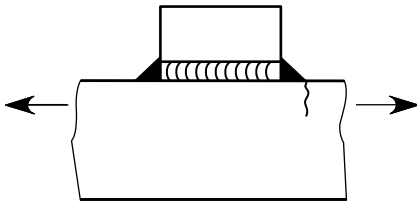	All	0
5	Attachment in load direction and doubling		As-welded	0.2

No	Joint category description	Geometry	Condition	n
	plates	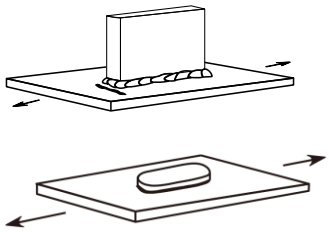	Weld toe treated by post-weld improvement method	0.1
6	Attachments and doubling plates supported in load direction	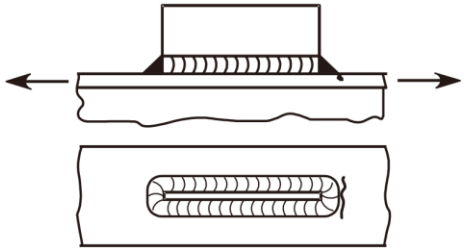	As-welded	0.1
		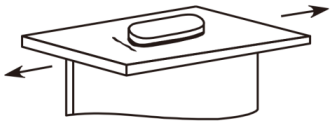	Weld toe treated by post-weld improvement method	0

9.5.3.4 Surface Finishing Factor

In fatigue strength assessment of the corners of free edge, the correction factors shown in **Table 9.5.3-2** are to be applied depending on the treatment of the corner.

Table 9.5.3-2 Thickness Exponent and Surface Finishing Factor for Corner of Free Edge

Joint configuration, fatigue crack location and stress direction	Edge cutting process	Edge treatment	Surface finishing	n	f_{surf}
Cutting edges 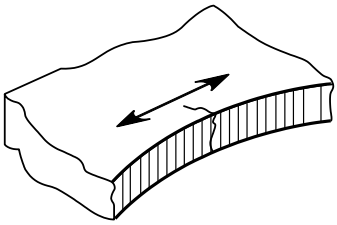	Machine cutting (e.g. by thermal process) or sheared edge cutting	Cutting edges chamfered or rounded edge by smooth grinding, groove direction parallel to the loading direction.	Smooth surface free of cracks and notches	0.1	1.00
		Cutting edges broken or rounded		0.1	1.07

9.5.4 Fatigue Damage Calculation

9.5.4.1 General

1 The cumulative fatigue damage for the fatigue design life is to be calculated as the expected value considering the time periods of the various conditions assumed for the fatigue design life.

2 "Conditions assumed for the fatigue design life" means the planned loading conditions and the environmental conditions to which the part under consideration is exposed.

9.5.4.2 Cumulative Fatigue Damage

1 The cumulative fatigue damage is to be calculated from the following formula:

$$D = f_{vib} \cdot \sum_j \alpha_{(j)} \cdot D_{(j)}$$

f_{vib}: Factor considering the effect of elastic vibration, taken as follows depending on the ship type under consideration.

(1) For ships other than container carriers, to be taken as 1.0.

(2) For container carriers, to be taken as follows depending on the assessment method considered:

(a) Where simplified stress analysis is conducted as the fatigue stress assessment method, to be taken as 1.3 when assessing the upper deck, hatch side coaming, side shell and double side hull longitudinal bulkheads constituting under deck passages, and longitudinals fitted to the inner bottom plating. For other members, to be taken as 1.0.

(b) Where finite element analysis is used as the fatigue stress assessment method, to be taken as 1.3 when assessing the structural details at the height of the upper deck and hatch coaming top plate at the midship part. For other members, to be taken as 1.0.

$\alpha_{(j)}$:Fraction of time of loading condition (j) in the fatigue design life, as given in **Part 2**.

$D_{(j)}$:Cumulative fatigue damage for the fatigue design life for loading condition (j) calculated by the following formula:

$$D_{(j)} = \frac{T_{FD} - T_C}{T_{FD}} D_{air,(j)} + \frac{T_C}{T_{FD}} D_{cor,(j)}$$

T_C: Time in corrosive environment according to **Table 9.5.4-1**.

$D_{air,(j)}$: Cumulative fatigue damage in the in-air environment for the fatigue design life for loading condition (j).

$D_{cor,(j)}$: Cumulative fatigue damage in the corrosive environment for the fatigue design life for loading condition (j).

Where:

$D_{air,(j)}$ and $D_{cor,(j)}$ are calculated by the following procedure:

$$D_{air,(j)} = \sum_{k=1}^{K} \frac{N_{FD}}{N_{air}\left(\overline{\Delta\sigma}_{eq(j),k}\right)} \cdot P_{k(j)}$$

$$D_{cor,(j)} = \sum_{k=1}^{K} \frac{N_{FD}}{N_{cor}\left(\overline{\Delta\sigma}_{eq(j),k}\right)} \cdot P_{k(j)}$$

$N_{air}\left(\overline{\Delta\sigma}_{eq(j),k}\right)$: Fatigue life under constant equivalent stress range in the in-air environment

$N_{cor}\left(\overline{\Delta\sigma}_{eq(j),k}\right)$: Fatigue life under constant equivalent stress range in the corrosive environment

$\overline{\Delta\sigma}_{eq(j),k}$: Equivalent stress range (N/mm^2) corresponding to the hot spot stress range $\Delta\sigma_{hs,(j)} = \overline{\Delta\sigma}_{(j)k}$ for loading condition (j) according to **9.5.2.2**. Where $\overline{\Delta\sigma}_{(j)k}$ is as follows:

$$\overline{\Delta\sigma}_{(j)k} = \frac{\Delta\sigma_{(j)k-1} + \Delta\sigma_{(j)k}}{2}$$

$$\Delta\sigma_{(j)k} = \Delta\sigma_{HS_R,(j)} \cdot \frac{k}{K} \cdot \frac{\ln N_{FD}}{\ln 100}$$

$$\Delta\sigma_{(j)k-1} = \Delta\sigma_{HS_R,(j)} \cdot \frac{k-1}{K} \cdot \frac{\ln N_{FD}}{\ln 100}$$

$$P_{k(j)} = \exp\left(\frac{k-1}{K} \cdot \ln\frac{1}{N_{FD}}\right) - \exp\left(\frac{k}{K} \cdot \ln\frac{1}{N_{FD}}\right)$$

N_{FD}: Total number of cycles in the fatigue design life T_{FD}.

$$N_{FD} = \frac{60 \times 60 \times 24 \times 365.25}{4\log L_c} \cdot f_D \cdot T_{FD}$$

f_D: Ship's operation rate, taken as 0.85

K: Not less than 300

Table 9.5.4-1 Time in Corrosive Environment T_C

Location of hot spot	Time in corrosive environment T_C (years)
Water ballast tank	10
Cargo oil tank	
Lower part(1) of bulk cargo hold and water ballast cargo hold	
Bulk cargo hold and water ballast cargo hold except lower part(1)	5
Void space Other areas	
Cargo tank and supports of liquefied gas carriers	0
(1) "Lower part" means the cargo hold part within a vertical distance of 3 m from the inner bottom plating.	

9.5.5 Fatigue Strength Assessment Criterion

9.5.5.1 Fatigue Strength Assessment Criterion

The fatigue strength assessment criterion (acceptance criterion) is to be as follows:

$\eta \cdot \eta_l^3 \cdot D \leq 1.0$

D: Fatigue damage obtained from 9.5.4.2

η: Correction factor of fatigue damage based on fatigue load used in the assessment, as given in Table 9.5.5-1.

η_l: Correction factor of fatigue damage, as given in the following:

(1) As given in the following **(a)** and **(b)** for longitudinal end connections:

(a) 1.44 for side longitudinals installed between $0.3T_{SC}$ and T_{SC}

(b) 1.0 for longitudinals other than above

(2) 1.0 for connections of platings and girders and the free edge of the base material

Table 9.5.5-1. Correction factor of fatigue damage η

Assessed member	η (Worldwide Load)	η (North Atlantic Ocean Load)
Connections of platings and girders, and free edge of base material, which are related to function of compartment	1.0	1.0
Free edge of base material which is not related to function of compartment (Hatch corners of ships other than liquefied gas carriers, etc.)	0.92	0.71
Welded joints which is not related to function of compartment (Welded joints in way of hatch corners of ships other than liquefied gas carriers, etc.)	0.79	0.73
Deck longitudinals which are not related to function of compartment (Deck longitudinals of ships other than liquefied gas carriers or deck longitudinals inside top side tanks of liquefied gas carriers, etc.)	$0.427N^{0.2439}$	$0.324N^{0.3217}$
Deck longitudinals which are related to function of compartment (Deck longitudinals inside hold space of liquefied gas carriers, etc.)	$0.621N^{0.2083}$	$0.541N^{0.2686}$
Longitudinals other than deck longitudinals	1.0	1.0
(Note) N : The number of deck longitudinals in the considered compartment		

9.5.6 Fatigue Strength Improvement Method

9.5.6.1 General

1 Post-weld fatigue strength improvement methods are to be considered as a supplementary method of achieving the required fatigue life, and are to be subjected to quality control procedures.

2 Post-weld treatment methods are to, in general, be considered only in cases when the fatigue design life cannot reasonably be achieved by adopting alternative design measures such as improvement of the shape of the cut-outs, soft bracket toes, local increase in thickness or other changes in the geometry of the structural detail.

3 Post-weld treatment methods that may be considered in this Rules in order to improve fatigue strength in the fabrication stage are the following **(1)** and **(2)**:

(1) Weld toe geometry control by grinding

(2) A method deemed appropriate by the Society

9.5.6.2 Notes on Application of Improvement Methods

When fatigue strength is improved by post-weld treatment, the following **(1)** or **(2)** is to be applied to prevent fatigue fracture from the weld root.

(1) According to the requirement of 12.2.1.4, in the case of fillet welds, the welding method is to be changed to partial penetration welding or full penetration welding, and in the case of partial penetration welding, the groove is to be enlarged or the method is to be changed to full penetration welding.

(2) The fatigue strength of the fillet weld root is to be assessed in accordance with the requirement of 9.7.

9.5.6.3 Post-Weld Treatment Procedure

When controlling the weld toe geometry by grinding, the following procedure is to be followed.

(1) For fillet welds, the grinding area is to be extended not less than 10 times the plate thickness to both sides of the hot spot.

(2) When grinding a corner boxing weld, the area in the range of 30 mm from the corner is to be ground.

(3) The depth of grinding is to be at least 0.5 mm but less than 2 mm or $0.07t_{as-build}$ (mm) along the weld toe, and visible undercuts and notches are to be removed.

(4) The resulting radius of the weld toe is to be not less than $0.25t_{as-build}$ (mm).

9.5.6.4 Applicability

The following conditions are to be satisfied when the post-weld treatment methods in this 9.5.6 and the correction factor for post-weld treatment in 9.5.3.1-2 are applied.

(1) The weld type complies with 9.5.6.2.

(2) Unless otherwise specified, the correction factor for post weld-treatment is to be used for welded joint of steel plates having a thickness of not less than 6 mm.

(3) Post-weld treatment is not to be applied to longitudinal end connections.

(4) Treatment of the bead surface is required for large multi-pass welds as shown in Fig. 9.5.6-1.

(5) The builder is to provide a list of the hot spots to which post-weld treatment has been applied and the procedure of the post-weld treatment.

Fig. 9.5.6-1 Extent of Grinding to Remove Bead Toe on Weld Surface

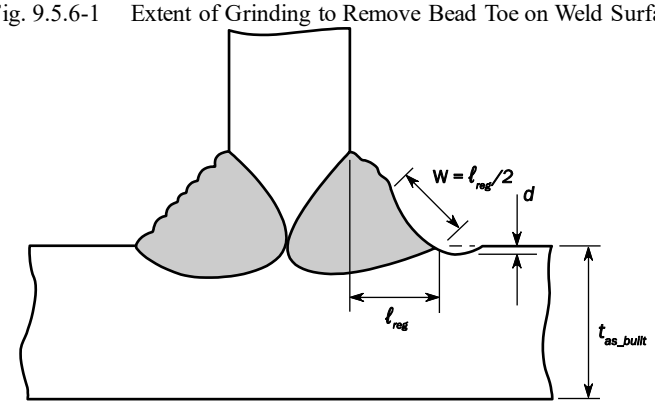

ℓ_{leg}: Weld leg length (mm)

w: Width of grinding (mm)

d: Depth of grinding (mm)

9.6 Detail Design Standard

9.6.1 General

9.6.1.1 Purpose

Detail design standard is specified considering the following **(1)** and **(2)**.

(1) Construction tolerances and other practical considerations

(2) In-service experience

9.6.1.2 Application

1 General structural details are to be designed according to the detail design standard specified in **9.6.2**, but alternative detail design configurations may be accepted subject to demonstration of satisfactory fatigue performance.

2 Connections of longitudinal and transverse girder are to be designed according to the detail design standard specified in **9.6.3**.

3 When the structural details specified in **9.2** are designed according to the detail design standard specified in **9.6.4** and **9.6.5**, the fatigue strength assessment by finite element analysis for hot spot stress may be omitted.

9.6.2 General Structural Details

9.6.2.1 Structural Continuity

1 At locations where the longitudinal plating forms a discontinuous structure, structural continuity is to be ensured by providing a supporting structure with adequate strength.

2 At locations where the longitudinal girder or longitudinal forms a discontinuous structure, structural continuity is to be ensured by providing brackets with adequate strength.

9.6.2.2 Structural Details of Bracket Ends

For the structural details of end brackets of the girders, brackets and struts provided on the rear side of girders, in cases of highly stressed parts, stress concentration is to be avoided based on the standard practice, for example, specified in the following **(1)** to **(7)**:

(1) Bracket ends are to be connected as smoothly as practicable.

(2) Face plates are to have soft snip ends as far as practicable.

(3) Where thick plates are used for face plates, the thickness at the ends is to be not more than 15 *mm*, and this is to be achieved either by inserting plates or by tapering to reduce the thickness smoothly.

(4) Bracket ends and corners are to be fitted with ribs with no scallop.

(5) Bracket ends are to be bevelled and welded.

(6) Bracket ends are to be as thick as possible.

(7) Slots in plating, girders on the rear side of strong bracket end connections are to be closed.

Fig. 9.6.2-1 Structural Detail of Bracket End

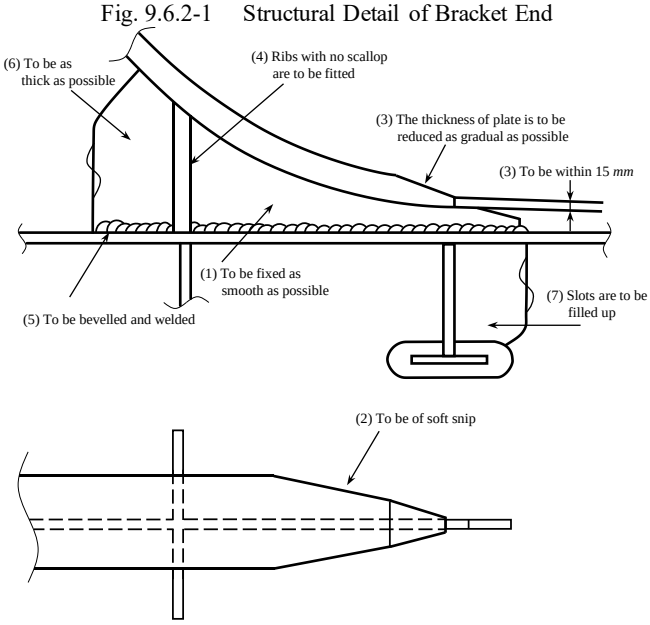

9.6.2.3 Structural Details of Transverse Girder

The structural details of the transverse web are to be in accordance with the following **(1)** to **(3)**:

(1) Collar plates are to be provided at slots for penetration of longitudinal where shearing stress is high, such as end brackets at transverse girder and joints with cross ties. Lightening holes are not to be provided in such locations.

(2) No scallops are to be provided in web plates at the connection of face plates on transverses and those of girder plates. Scallops cut out for work convenience are to be filled up by welding. Abrupt changes in dimensions are to be avoided (*See* **Fig. 9.6.2-2**).

(3) The radius of the rounded corner of girder is to be as large as practicable.

Fig. 9.6.2-2 Structural Details of Transverse Girder

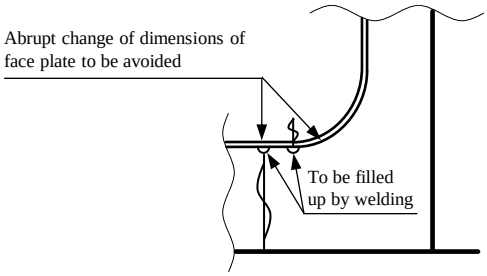

9.6.3 Connections of Longitudinals and Transverse Girders

9.6.3.1 Detail Design Standard A

1 Designs for cut-outs in cases where web stiffeners are omitted or not connected to the longitudinals are required to adopt a tight collar or the improved detail design standard A as shown in **Table 9.6.3-1,** or equivalent, for the following members:

(1) Side shell below 1.1 T_{SC}

(2) Bottom

(3) Inner longitudinal bulkhead below 1.1 T_{SC}

(4) Topside tank sloping plating below 1.1 T_{SC}

(5) Bilge hopper

(6) Inner bottom plating

2 Designs that are different from those shown in **Table 9.6.3-1** are acceptable subject to demonstration of satisfactory fatigue performance, for example, by comparative finite element analysis. The comparative finite element analysis is to be performed following the modelling guidance given in **Fig. 9.6.3-1**.

Fig. 9.6.3-1 Example of Finite Element Model for Verification of Alternative Design

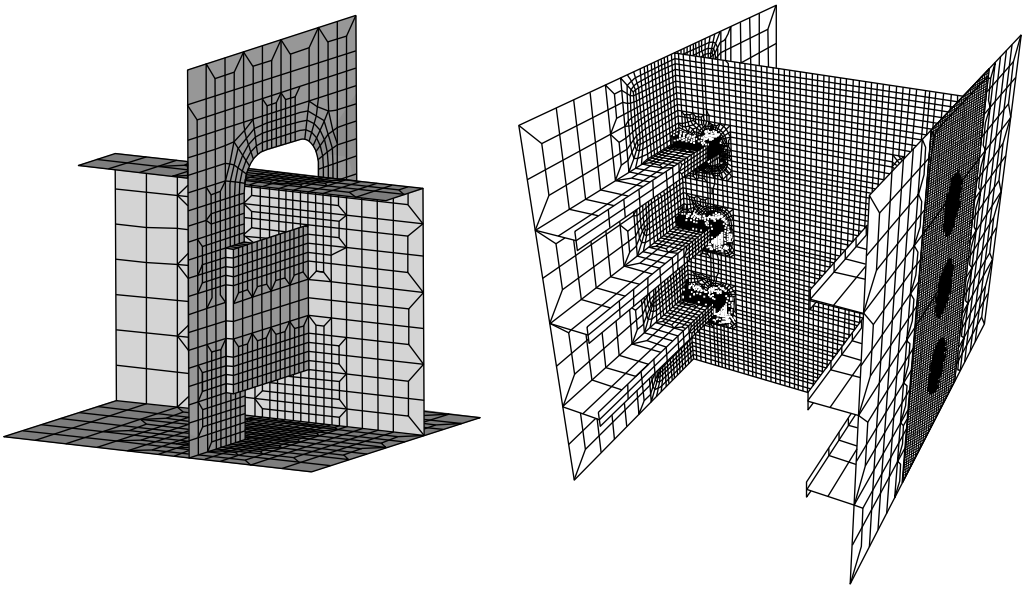

9.6.3.2 Alternative Design of Connections of Longitudinals and Transverse Girders

1 If the required designs of connections of longitudinals and transverse girders in **9.6.3.1** are not followed, the alternative design is to be verified to have equivalent fatigue strength to the detail design standard A, or to be verified to have satisfactory fatigue performance. The alternative design is to be verified according to the procedure specified in the following **(1)** to **(3)** and documentation of the results is to be submitted to the Society.

(1) The alternative design is to be verified to have equivalent fatigue strength with respect to any position in the double bottom structure and double side structure. The hot spots to be assessed depend on the detail design and are to be selected in agreement with the Society. Typical hot spots are shown in **Table 9.2.2-11**.

(2) The analysis is to be carried out using models in which very fine mesh elements are incorporated in the structural model used

for fatigue strength assessment specified in 9.4. For modeling, it is to be in accordance with the following **(a)** to **(e)**. A typical model is shown in Fig. 9.6.3-1.

(a) The longitudinal extent is to be one frame space in the forward and aft directions.

(b) No cut-outs for access openings are to be included in the models.

(c) Connections between the lug or the transverse girder to the longitudinal's web, connections of the lug to the transverse girder and free edges on lugs, and cut-outs in transverse girder are, as the standard practice, to be modelled with elements of 10 $mm \times 10$ mm mesh size.

(d) The mesh is to extend at least 10 elements in all directions. Outside this area, the mesh size may gradually be increased in accordance with the requirements specified in 9.4.2.

(e) The eccentricity of the lapped lug plates is to be included in the model. The transverse girder and lug plates are to be connected by eccentricity elements (shell elements). The height of the eccentricity element is to be the distance between mid-layers of the transverse girder and lug plates having a thickness equal to 2 times the net thickness of the transverse girder t_{w-n25}. Eccentricity elements representing fillet welds are shown in Fig. 9.6.3-2.

(3) The alternative design is to satisfy the fatigue acceptance criterion specified in 9.5.5. The fatigue acceptance criterion is checked by applying the methodology described in 9.1, 9.4 and 9.5. The alternative design is considered acceptable only for the particular position where it is analysed.

Fig. 9.6.3-2 Modelling of Eccentric Lug Plate by Shell Elements

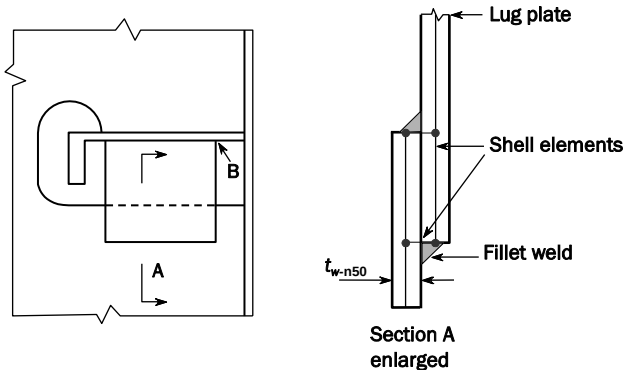

Table 9.6.3-1 Detail Design Standard A – Connections of Longitudinals and Transverse Girders

Cut-outs for longitudinals in transverse girders where web stiffeners are omitted or not connected to the longitudinal flange	
Detail design standard A	
1	2
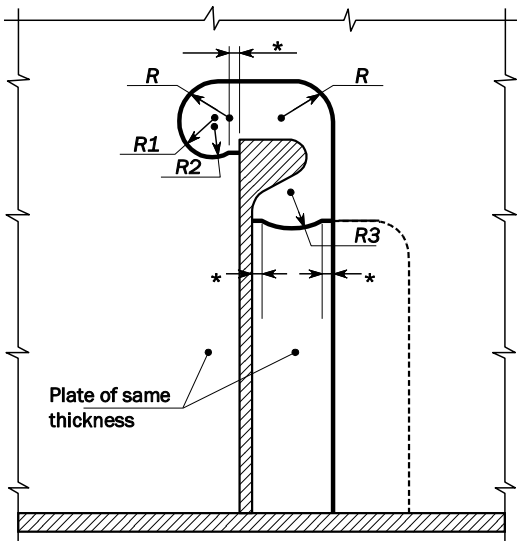	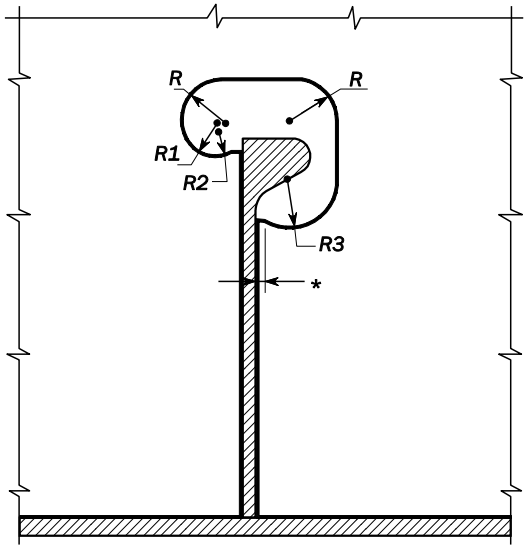
3	4
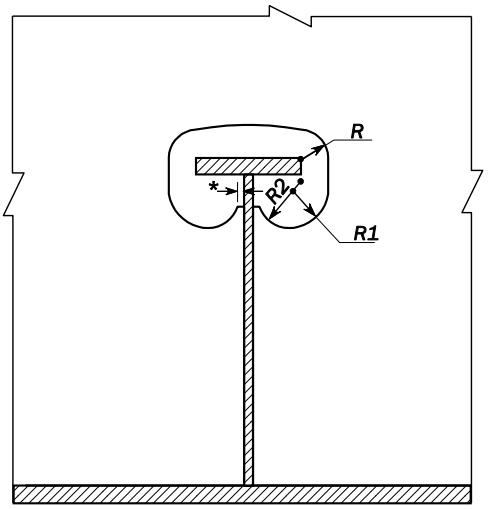	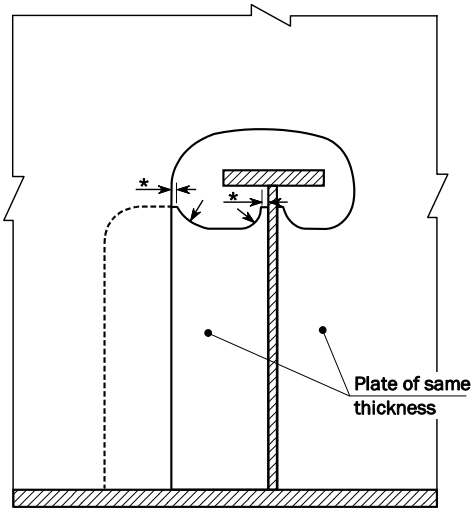
Note 1: Soft toes marked with * are to be dimensioned to suit the weld leg length such that a smooth transition from the weld to the curved part can be achieved. Maximum 15 *mm* or thickness of the transverse girder/collar plates/lug plates, whichever is greater. Note 2: Configurations 1 and 4 indicate acceptable lapped lug plate connections.	
Critical location	Locations around cut-outs with high stress concentration and locations in way of weld terminations.
Detail design standard	Improved slot shape to avoid high stress concentrations in transverse girders due to shear load and local pressure load transmitted via welded joints.
Building tolerances	Ensure alignment of all connecting members and accurate dimensional control of cut-outs according to *IACS Recommendation No. 47*.
Welding requirements	A wraparound weld, free of undercut or notches, around the transverse girder connection to the longitudinal's web.

9.6.4 Bilge Hopper-Knuckle Connections

9.6.4.1 Detail Design Standard B to G

1 The welded knuckle between the bilge hopper plating and the inner bottom plating in the cargo tanks of oil tankers and in the cargo tanks of ships carrying dangerous chemicals in bulk is to be designed according to detail design standard B in **Table 9.6.4-1**. The detail design standard C in **Table 9.6.4-2** may be used as the alternative to increase fatigue strength at the hopper connection.

2 The welded knuckle between the bilge hopper plating and the inner bottom plating in the cargo holds of box-type bulk carriers, cargo holds of ore carriers and ballast holds of wood chip carriers is to be designed according to detail design standard D in **Table 9.6.4-3**.

3 The radiused knuckle between the bilge hopper plating and the inner bottom plating in the cargo tanks of oil tankers and in the cargo tanks of ships carrying dangerous chemicals in bulk is to be designed according to detail design standard E in **Table 9.6.4-4**.

4 The radiused knuckle between the bilge hopper plating and the inner bottom plating in the cargo holds of box-type bulk carriers, cargo holds of ore carriers and ballast holds of wood chip carrier is to be designed according to detail design standard F in **Table 9.6.4-5**.

5 The radiused knuckle between the bilge hopper plating and the inner longitudinal bulkhead in the cargo holds of box-type bulk carriers, cargo holds of ore carriers, ballast holds of wood chip carriers, cargo tanks of oil tankers, and cargo tanks of ships carrying dangerous chemicals in bulk is to be designed according to detail design standard G in **Table 9.6.4-6**.

Table 9.6.4-1 Detail Design Standard B – Bilge Hopper Knuckle Connection Detail, Welded, without Bracket, Oil Tanker (Cargo Tank), Ship Carrying Dangerous Chemicals in Bulk (Cargo Tank)

Connections of floors in double bottom tanks to bilge hopper tanks Hopper corner connections employing welded inner bottom and bilge hopper plating	
Critical areas	Detail design standard B
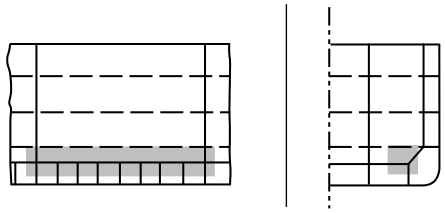	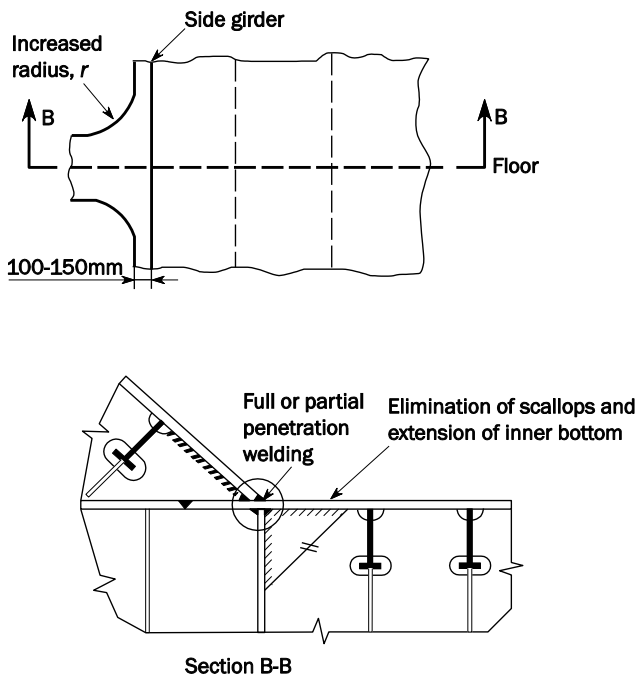
Critical locations	
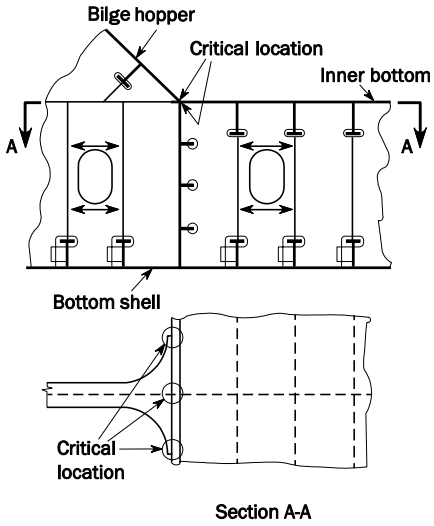	

Minimum requirement	As a minimum, detail design standard B or C is to be fitted. Where the lower hopper knuckle region of cargo tanks is not coated, the ground surface is to be protected by a stripe coat of suitable paint composition.
Critical location	Bilge hopper plating connections to inner bottom plating in way of floors. Floor connections to inner bottom plating and side girder in way of hopper corners.
Detail design standard	Elimination of scallops in way of hopper corners, extension of inner bottom plating to reduce the level of resultant stresses arising from cyclic external hydrodynamic pressure, cargo inertia pressure and hull girder load. Scarfing bracket thickness is to be close to that of the inner bottom in way of the knuckle.
Building tolerances	The median line of the bilge hopper plating is to be in line with the median line of the girder with an allowable tolerance of $t_{as-built}/3$ (mm) or 5 (mm), whichever is less, where $t_{as-built}$ (mm) is the as-built side girder thickness. The allowable tolerance is to be measured parallel to the inner bottom.
Welding requirements	Full or partial penetration welding is to be applied to bilge hopper plating and inner bottom plating connection. Partial penetration welding is to be applied to connections of side girders to inner bottom plating, to connections of floors to inner bottom plating and to side girders, and to connections of bilge hopper transverse girders to bilge hopper plating, to inner bottom plating and to side girders in way of the hopper knuckle. The definitions of full and partial penetration welding and their required extent are given in 12.2. Weld between bilge hopper plating and inner bottom plating is to be enlarged and ground smooth. Visible undercuts are to be removed, *see* 9.5.6. Weld enlargement and grinding are applicable to a minimum 200 mm on each side of the floor.

Table 9.6.4-2 Detail Design Standard C –Bilge Hopper Knuckle Connection Detail, with Bracket, Oil Tanker (Cargo Tank), Ship Carrying Dangerous Chemicals in Bulk (Cargo Tank)

<table>
<tr><td colspan="2">Connections of floors in double bottom tanks to bilge hopper tanks
Hopper corner connections employing welded inner bottom and bilge hopper plating</td></tr>
<tr><td>Critical areas</td><td>Detail design standard C</td></tr>
<tr><td> 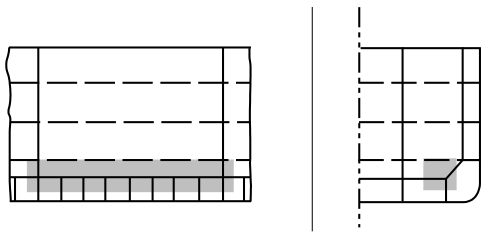 </td><td rowspan="3"> 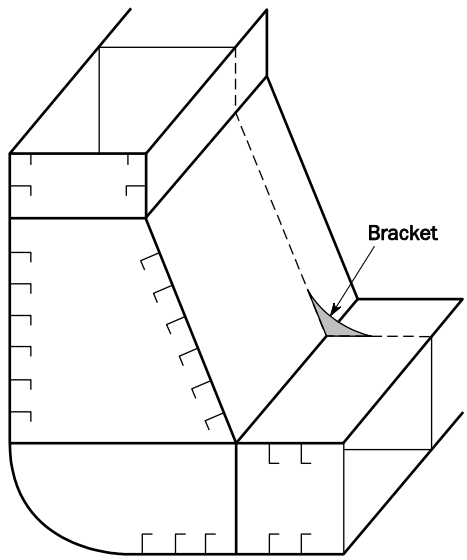

Note 1: Bracket to be fitted inside cargo tank.
Note 2: Bracket to extend approximately to the first longitudinal.
Note 3: Bracket toes are to have a soft nose design.
Note 4: Bracket material to be same as that of the inner bottom.
Note 5: Slenderness of bracket to be in accordance with 3.5.2.6.</td></tr>
<tr><td>Critical locations</td></tr>
<tr><td> 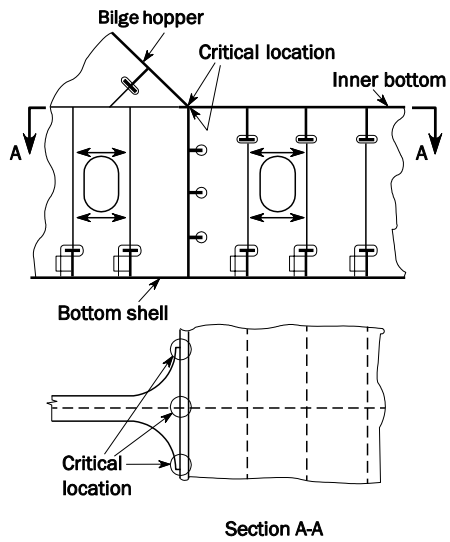
</td></tr>
</table>

Minimum requirement	As a minimum, detail design standard B or C is to be applied.
Critical location	Bilge hopper plating connections to inner bottom plating in way of floors. Floor connections to inner bottom plating and side girders in way of hopper corners. Bracket connections to inner bottom and bilge hopper plating.
Detail design standard	Elimination of scallops in way of hopper corners, extension of inner bottom plating to reduce the level of resultant stresses arising from cyclic external hydrodynamic pressure, cargo inertia pressure and hull girder load. Scarfing bracket thickness similar to that of the inner bottom in way of the knuckle.
Building tolerances	Median line of bilge hopper plating is to be in line with the median line of the girder within an allowable tolerance of $t_{as-built}/3\ (mm)$ or 5 mm, whichever is less, where $t_{as-built}\ (mm)$ is the as-built side girder thickness.
Welding requirements	Partial penetration welding is to be applied to connections of bilge hopper plating and inner bottom plating, to connections of side girders to inner bottom plating, to connections of floors to inner bottom plating and to side girders, and connections of bilge hopper transverse girders to bilge hopper plating, to inner bottom plating and to side girders in way of the hopper knuckle. Partial penetration welding is to be applied to bracket connections to inner bottom and bilge hopper plating. Full penetration welding is to be applied at bracket toes. The definitions of full and partial penetration welding and their required extent are given in 12.2.

Table 9.6.4-3 Detail Design Standards D – Hopper Connection Detail, Welded, Box-Type Bulk Carrier (Cargo Hold), Ore Carrier (Cargo Hold), Wood Chip Carrier (Ballast Hold)

Connections of floors in double bottom tanks to bilge hopper tanks Welded knuckle connections of bilge hopper plating and inner bottom plating	
Critical areas	Detail Design standard D
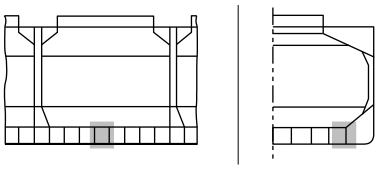 Critical locations 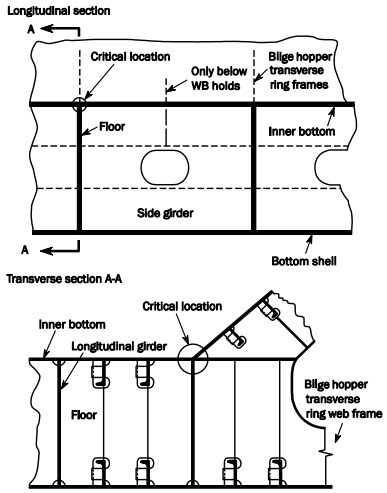 	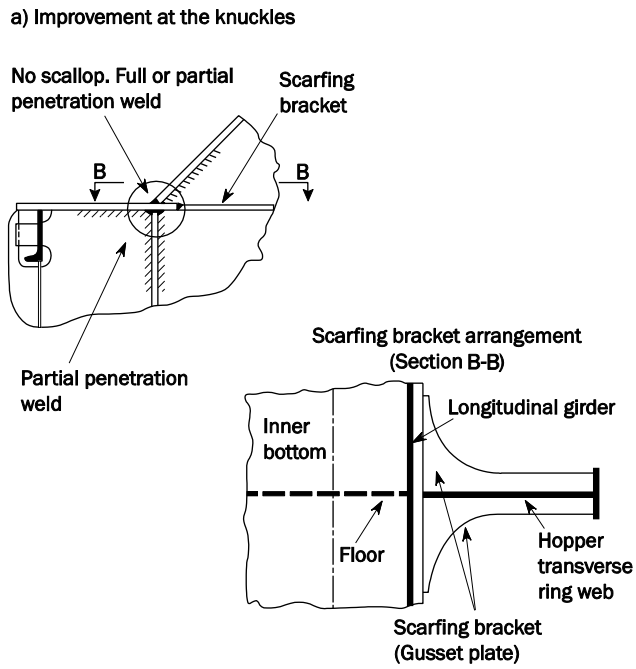

Minimum requirement	As a minimum, detail design standard D is to be fitted. Ballast holds and cargo holds: No scallops or scallops to be closed with collars. Scarfing brackets are to be provided.
Critical location	Bilge hopper plating connections to inner bottom plating in way of floors. Floor connections to inner bottom plating and side girders in way of the hopper knuckle.
Detail design standard	Elimination of scallops in way of hopper knuckle, extension of inner bottom plating to reduce the level of resultant stresses arising from cyclic external hydrodynamic pressure, cargo inertia pressure and hull girder load. Scarfing bracket net thickness is to be minimum 80% of that of the inner bottom in way of the knuckle, and the steel material is to be of the same yield strength.
Building tolerances	Median line of bilge hopper plating is to be in line with the median line of the girder within an allowable tolerance of $t_{as-built}/3$ (mm) or 5 mm, whichever is less, where $t_{as-built}$ (mm) is the as-built side girder thickness.
Welding requirements	Full or partial penetration welding is to be applied to bilge hopper plating and inner bottom plating connection for the length of the cargo hold. Partial penetration welding is to be applied to connections of side girders to inner bottom plating, to connections of floors to inner bottom plating and to side girders, and to connections of bilge hopper transverse girders to bilge hopper plating, to inner bottom plating and to side girders in way of the hopper knuckle. Weld between bilge hopper plating and inner bottom plating is to be enlarged and ground smooth. Visible undercuts are to be removed. Weld enlargement and grinding are applicable to a minimum 200 mm on each side of the floor. The definitions of full and partial penetration welding and their required extent are given in **12.2**.

Table 9.6.4-4 Detail Design Standard E –Bilge Hopper Knuckle Connection Detail, Radiused Type, Oil Tanker (Cargo Tank), Ship Carrying Dangerous Chemicals in Bulk (Cargo Tank)

Connection of floors in double bottom tanks to bilge hopper tanks

Hopper corner connections employing radiused knuckle between inner bottom and bilge hopper plating

Critical areas

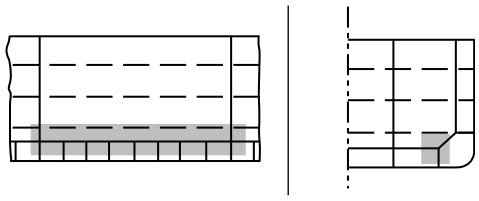

Critical locations

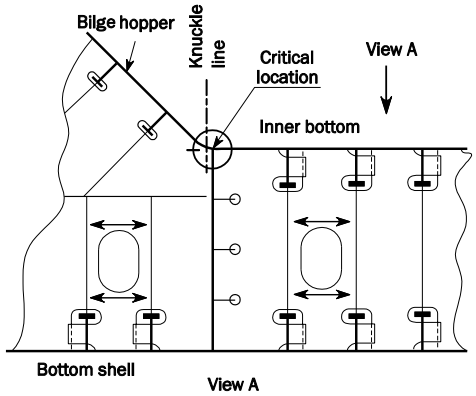

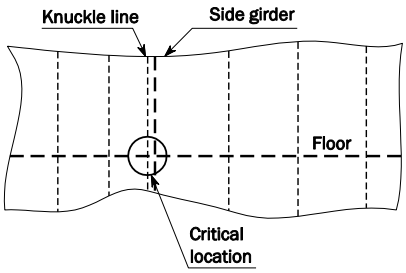

Detail design standard E

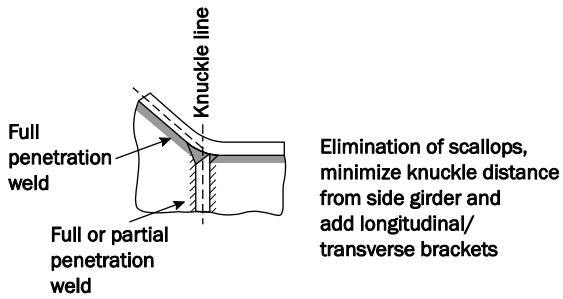

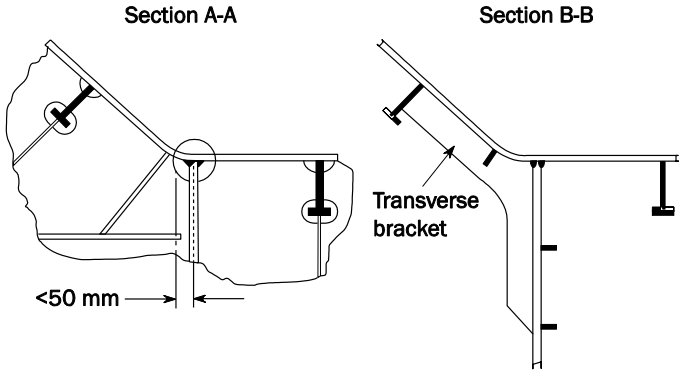

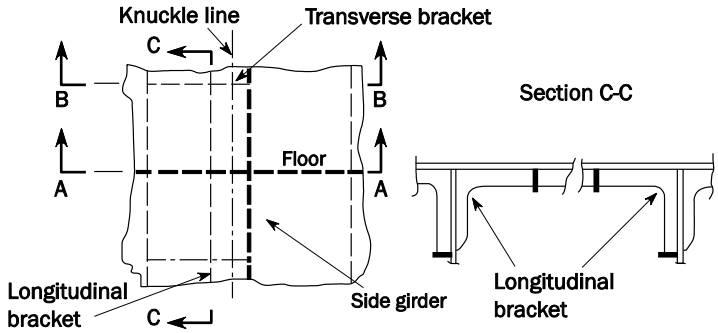

Note 1: Distance from side girder to centre of knuckle is to be as small as practicable, but is not to exceed 50 mm.

Note 2: The knuckle radius is not to be less than $4.5t_{as-built}$ (mm) or 100 mm, whichever is greater, where $t_{as-built}$ (mm) is the as-built thickness of the knuckle part.

Note 3: Additional transverse brackets offset at a suitable distance on either side of the transverse floor/bilge hopper connection.

Note 4: Additional longitudinal bracket on side of bilge hopper plating.

Note 5: Longitudinal and/or transverse brackets may be omitted if it can be demonstrated that the girder provides sufficient support at the knuckle line, i.e. that fatigue requirements according to **9.4** are fulfilled.

Critical location	Connections of floors and transverse girders in the bilge hopper to side girders, and connections of floors and transverse girders in the bilge hopper to the inner bottom plating and bilge hopper plating in way of the hopper knuckle. Connections of inner bottom plating to side girders in way of the floor.

Detail design standard	Elimination of scallops in way of hopper/girder connections. Additional transverse and longitudinal brackets to reduce the peak and range of resultant stresses arising from cyclic external hydrodynamic pressure, cargo inertia pressure and hull girder load. Provide additional supporting members to bilge hopper plating.
Building tolerances	The nominal distance between the centres of thickness of two abutting members (e.g. floor and hopper transverse girder) is not to exceed 1/3 of the as-built thickness of the side girder.
Welding requirements	Full penetration welding is to be applied to connections of floors to hopper/inner bottom plating in way of radiused hopper knuckles. Partial penetration welding is to be applied to connections of floors/hopper transverse girders to side girders in way of the hopper corner and to connections of side girders to hopper/inner bottom plating. The definitions of full and partial penetration welding and their required extent are given in **12.2**. In order to improve fatigue strength, weld enlargement and grinding are applicable to full and partial penetration welds with a minimum distance of 300 *mm* from the intersection point of the radiused knuckle, the floor and the side girder.

Table 9.6.4-5 Detail Design Standard F – Bilge Hopper Knuckle Connection Detail, Radiused Type, Box Type Bulk Carrier (Cargo Hold), Ore Carrier (Cargo Hold), Wood Chip Carrier (Ballast Hold)

Connection of floors in double bottom tanks to bilge hopper tanks

Hopper corner connections employing radiused knuckle between inner bottom and bilge hopper plating

Critical areas	Detail design standard F
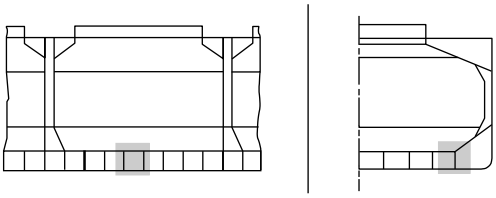	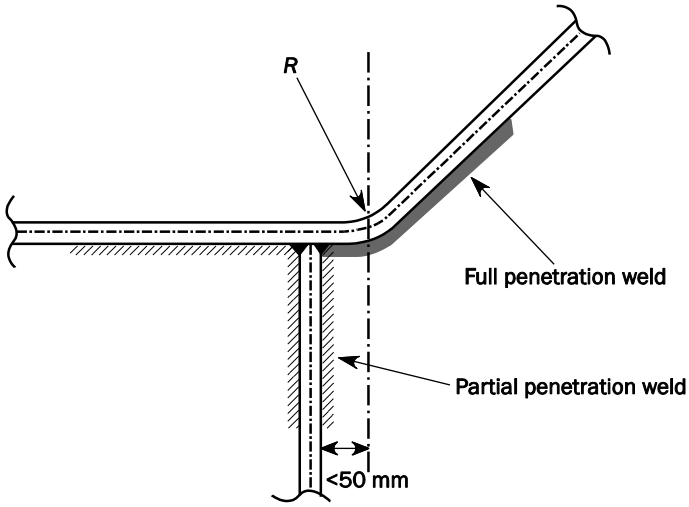
Critical locations	Transverse bracket arrangement (Section B-B) Two transverse brackets at both sides of the floor/transverse girder
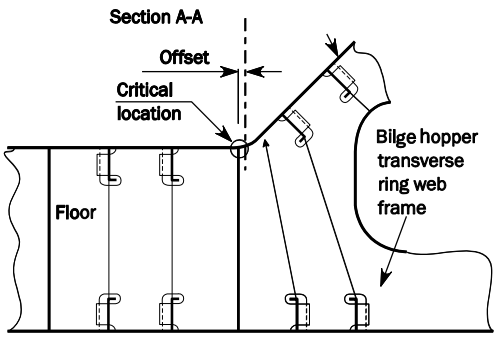	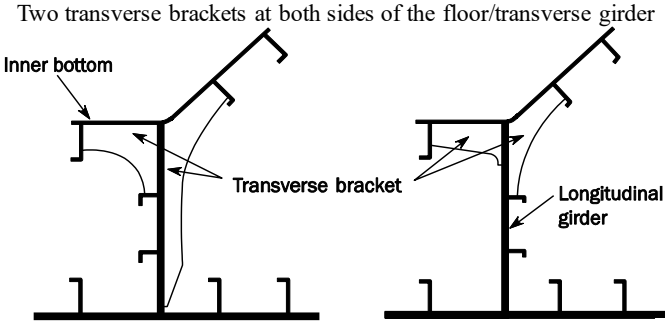
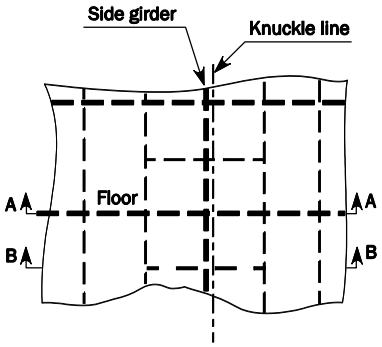	Note 1: Distance from side girder to centre of knuckle is to be as small as practicable, but is not to exceed 50 mm. Note 2: The knuckle radius is not to be less than $4.5t_{as-built}$ (mm) or 100 mm, whichever is greater, where $t_{as-built}$ (mm) is the as-built thickness of the knuckle part. Note 3: Additional transverse brackets offset at a suitable distance on either side of the transverse floor/bilge hopper connection. Note 4: Transverse brackets may be omitted if it can be demonstrated that the girder provides sufficient support at the knuckle line, i.e. that fatigue requirements according to **9.4** are fulfilled.

Critical location	Side girder connections to inner bottom plating in way of floors. Floor and bilge hopper transverse girder connections to inner bottom plating and bilge hopper plating.
Detail design standard	Elimination of scallops in way of hopper/girder connections. Provide additional transverse or longitudinal brackets to reduce the peak and range of resultant stresses arising from cyclic external hydrodynamic pressure, cargo inertia pressure and hull girder load. Provide additional supporting members to bilge hopper plating.
Building tolerances	The nominal distance between the centres of thickness of two abutting members (e.g. floor and hopper transverse girder and additional supporting bracket) is not to exceed 1/3 of the as-built thickness of the side

	girder.
Welding requirements	Full penetration welding is to be applied to connections of floors to hopper/inner bottom plating in way of radiused hopper knuckles. Partial penetration welding is to be applied to connections of floors/hopper transverse girders to side girders in way of hopper corners and to connections of side girders to bilge hopper/inner bottom plating. The definitions of full and partial penetration welding and their required extent are given in **12.2**.

Table 9.6.4-6 Detail Design Standard G – Upper Hopper Knuckle Connection Detail, Radiused Type, Box Type Bulk Carrier (Cargo Hold), Ore Carrier (Cargo Hold), Wood Chip Carrier (Cargo Hold), Oil Tanker (Cargo Hold), Ship Carrying Dangerous Chemicals in Bulk (Cargo Hold)

Connection of transverse girders in double side tanks and bilge hopper tanks

Hopper corner connections employing radiused knuckle between inner longitudinal bulkhead and bilge hopper plating

Critical areas	Detail design standard G
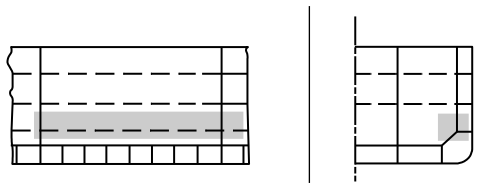	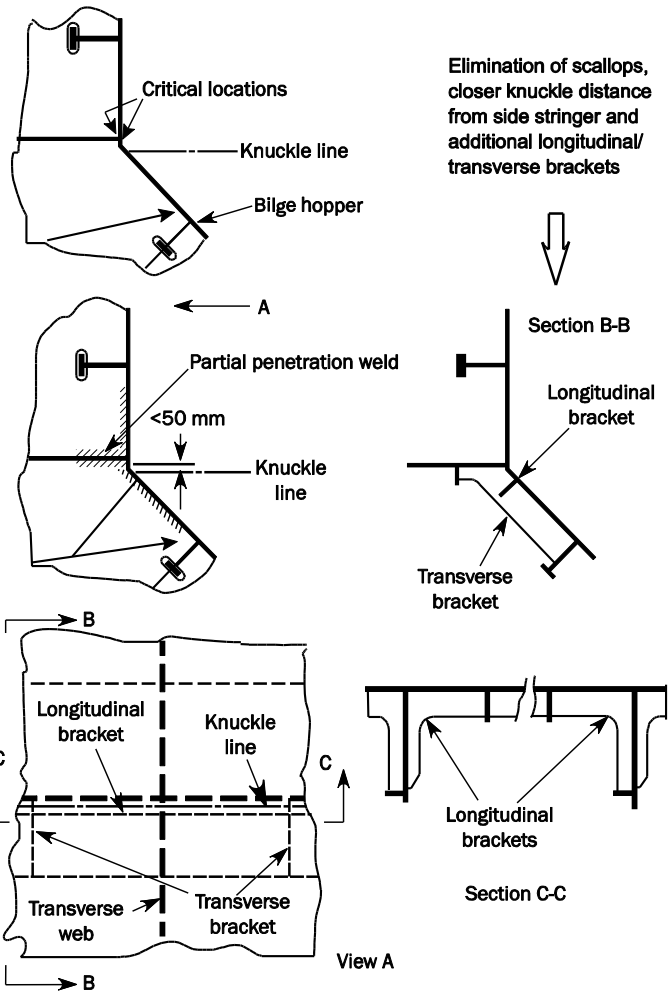
Critical locations	
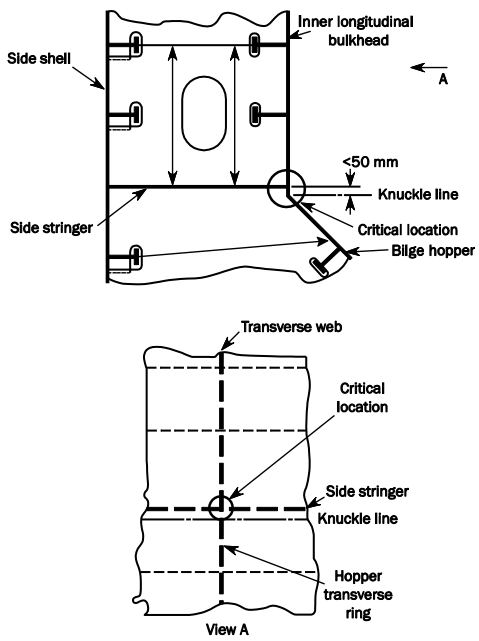	Note 1: Distance from side stringer to centre of knuckle is to be as small as practicable, but is not to exceed 50 mm. Note 2: The knuckle radius is not to be less than $4.5t_{as-built}$ (mm) or 100 mm, whichever is greater, where $t_{as-built}$ (mm) is the as-built thickness of the knuckle part. Note 3: Additional transverse brackets offset at a suitable distance on either side of the transverse floor/bilge hopper connection. Note 4: Additional longitudinal bracket on the side of bilge hopper plating. Note 5: Longitudinal and/or transverse brackets may be omitted if it can be demonstrated that the side stringers provide sufficient support at the knuckle line, i.e. that fatigue requirements according to **9.4** are fulfilled.

Critical location	Side stringer connections to side longitudinal bulkhead in way of transverse girders. Double side tank transverse girder and bilge hopper transverse girder connections to inner longitudinal bulkhead and to side stringers in way of hopper corners.

Detail design standard	Elimination of scallops in way of hopper corners, closer knuckle distance from side stringers. Provide additional longitudinal/transverse brackets to reduce the peak and range of resultant stresses arising from cyclic external hydrodynamic pressure and cargo inertia pressure.
Building tolerances	The nominal distance between the centres of thickness of two abutting members is not to exceed 1/3 of the as-built thickness of the side stringer.
Welding requirements	Partial penetration welding is to be applied to connections of side stringers to the inner longitudinal bulkhead, connections of double side tank transverse girders to the inner longitudinal bulkhead and to side stringers, and connections of hopper transverse girders to the sloped inner longitudinal bulkhead and to side stringers in way of hopper corners. Small scallops of suitable shape, which are to be closed by welding after completion of the continuous welding of side stringers to the inner longitudinal bulkhead, are to be provided where scallops are eliminated. The definitions of full and partial penetration welding and their required extent are given in **12.2**.

9.6.5 Bulkhead Connection to Lower Stool

9.6.5.1 Detail Design Standards H

The welded connection of the bulkhead to the lower stool in the cargo holds of box type bulk carriers, cargo holds of ore carriers and ballast holds of wood chip carriers are to be designed according to the detail design standard H, as shown in **Table 9.6.5-1**.

Table 9.6.5-1 Detail Design Standard H –Transverse Bulkhead Connection Detail, Box Type Bulk Carrier (Cargo Hold), Ore Carrier (Cargo Hold), Wood Chip Carrier (Ballast Hold)

Connection of transverse bulkhead with lower stool	
Critical areas (i.e. wood chip carrier)	Detail design standard H
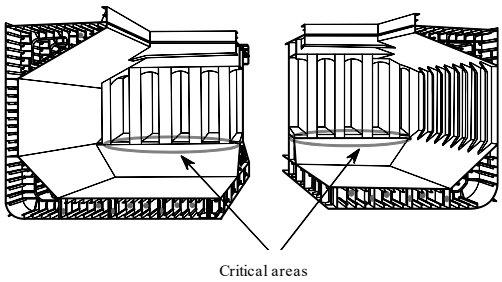	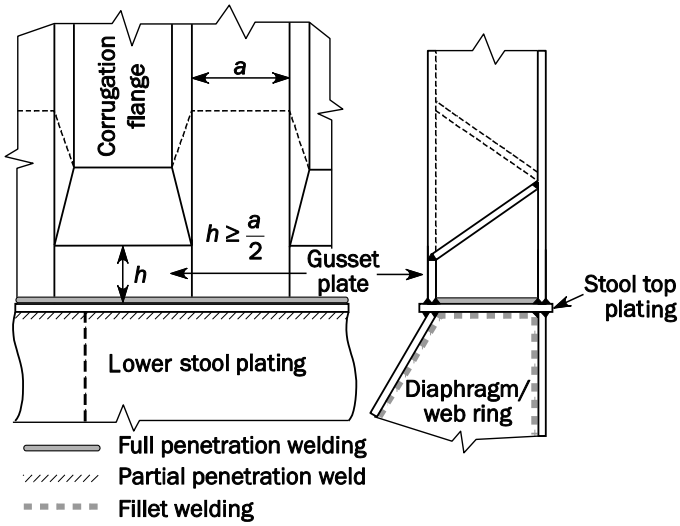
Critical locations	
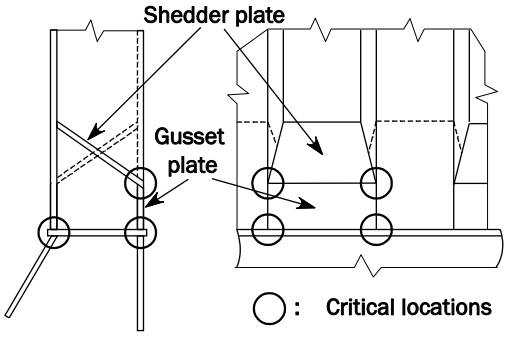	

Critical location	Connection of lower stool shelf plating to lower stool and corrugated transverse bulkheads. Connection of shedder plates to corrugated transverse bulkhead.
Detail design standard	The use of scallops is to be avoided on diaphragms/web at lower stool top plating. Gusset plates are to be fitted to corrugated bulkheads. Gusset plates are to be made of the same material and have the same as-built thickness as corrugated bulkheads, and the height of gusset plates is to be greater than half of breadth of the corrugation. To reduce stress concentrations at the crossing of the shedder plates, asymmetric shedder plates are to be used, as shown in the figure (i.e. one plate is to be higher than other). Alternatively, a bracketed stiffener may be fitted at the crossing points underneath the shedder plating facing the ballast hold.
Building tolerances	Ensure alignment between the lower stool plating and corrugation faces according to *IACS Recommendation No. 47*.
Welding requirements	Full penetration welding is to be applied between lower stool top plating and the side plating of lower stools and corrugated bulkheads. Partial penetration welding is to be applied around gusset plates. However, full penetration welding is to be applied between lower stool top plating and gusset plates. Ensure start and stop of welding are as far as practicable from the critical corners.

9.7 Weld Root Fatigue Strength Assessment

9.7.1 General

9.7.1.1 Application

1 This 9.7 is to be applied when conducting a fatigue strength assessment of the weld roots of fillet or partial penetration welds.

2 The weld toe of the weld where the weld root fatigue strength assessment is conducted is to satisfy the fatigue strength specified in this Chapter.

3 A fatigue strength assessment based on the effective notch stress range is to be conducted for the weld root.

4 Where the fatigue strength based on the Rules does not satisfy the applicable criterion, the welded details are to be change, e.g. by increasing the throat thickness.

9.7.1.2 Weld Root

1 Weld root means the end of the unwelded region of a fillet weld or partial penetration weld.

2 The dimensions of the unwelded region are to be in accordance with the welded details. A root gap of 0.3 *mm* is to be provided.

9.7.1.3 Effective Notch

Effective notch means a virtual circular notch with a radius of 1 *mm* located at the local stress concentration points at the weld toe and weld root (*See* Fig. 9.7.1-1).

Fig. 9.7.1-1 Effective Notch

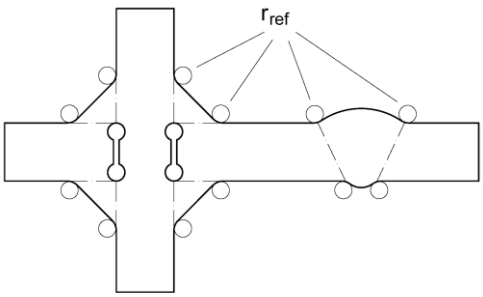

9.7.2 Effective Notch Stress

9.7.2.1 General

1 Effective notch stress means the elastic stress at the surface of the effective notch and is obtained by finite element analysis using a plane strain shell model or solid model of the notch.

2 A solid model reproducing the weld and the effective notch in the very fine mesh region is to be incorporated in the three-hold shell model, and the effective notch stress is to be obtained by applying the load to the three-hold shell model.

3 Notwithstanding the requirement in **-2** above, where the welded joint type of the structure does not change along the weld line, the effective notch stress may be obtained by applying the boundary conditions of the finite element analysis to a model in which a solid model without modelling of the weld is incorporated in a plane strain element shell model reproducing the weld and effective notch.

9.7.2.2 Shell-Solid Mixed Model

1 The region within 5 times the thickness from the hot spot in the assessed weld is to be modelled using solid elements.

2 The solid model is to be coupled by placing a shell element (PSCM) orthogonal to the surrounding shell model elements and of the same thickness as the shell element to be coupled, on the solid model end face.

3 The shell model is to be coupled at the thickness centreline of the solid model. The edge of the solid model is to consist of not less than four layers in the direction of thickness.

4 Shell elements having a thickness of 0.01 *mm* are to be provided on the surface of the solid model to transmit lateral pressure to the model.

5 The shell-solid model coupling procedure is shown in Fig. 9.7.2-1 for the stool top plating under a corrugated bulkhead.

Fig. 9.7.2-1 Shell-Solid Model Coupling Procedure

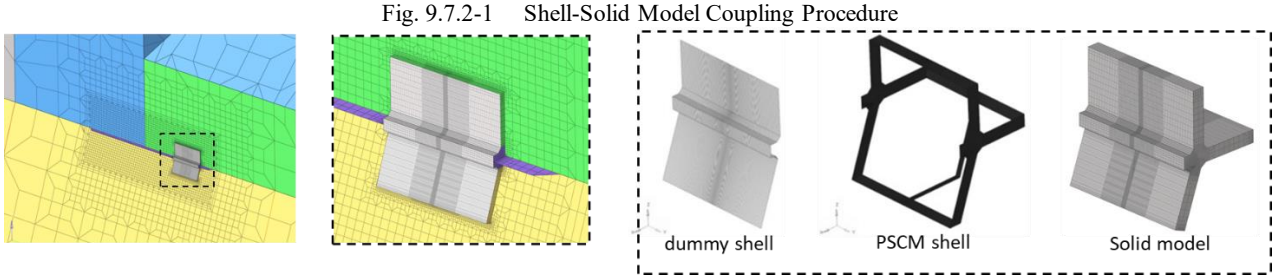

(a) Solid model coupled to very fine mesh shell model (b) Configuration of coupled solid model

9.7.2.3 Effective Notch Modelling Procedure

1 When modelling the effective notch, the size of the elements at the bottom of the effective notch is to be as given in **Table 9.7.2-1**.

Table 9.7.2-1 Size of Elements along Effective Notch

Type of element	Size of element	Number of elements along 45° arc	Number of elements along 360° arc
Secondary element	Not more than 0.25 *mm*	Not less than 3	Not less than 24
Linear element	Not more than 0.15 *mm*	Not less than 5	Not less than 40

2 The elements surrounding the effective notch are to be located radially in at least four concentric circles (*See* **Fig. 9.7.2-2**).

Fig. 9.7.2-2 Modelling Procedure for Area Surrounding Effective Notch

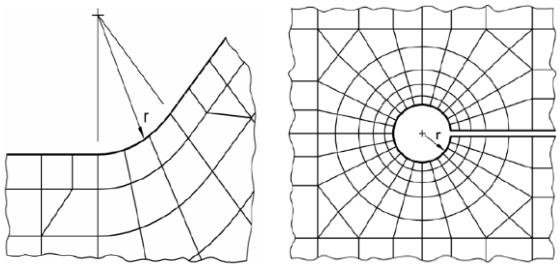

3 When the effective notch is modelled using solid elements, the cross section described in **-2** above is to be maintained in the entire modelling region. Cubic elements are to be used in way of the assessed location.

4 When the stress at grid points cannot be obtained directly, shell elements with a thickness of 0.01 *mm* are to be provided along the bottom of the effective notch to obtain the stress at the notch bottom.

5 When using a plane strain element shell model, orthogonally intersecting members at the assessed position are to be modelled using the plane strain elements (*See* **Fig. 9.7.2-3**).

6 When the stress at the element node at the bottom of the effective notch cannot be obtained directly, bar elements are to be provided along the effective notch bottom. In this case, the stress is to be corrected by multiplication by $1/(1-\nu^2)$, where ν is Poisson's ratio, which is taken as 0.3.

7 The point coupled to a three-hold model is to be the fixed point, and relative displacement is to be given to the boundary nodes of the 2-D model edge element.

Fig. 9.7.2-3 Example of Modelling Using 2-D Plane Strain Model

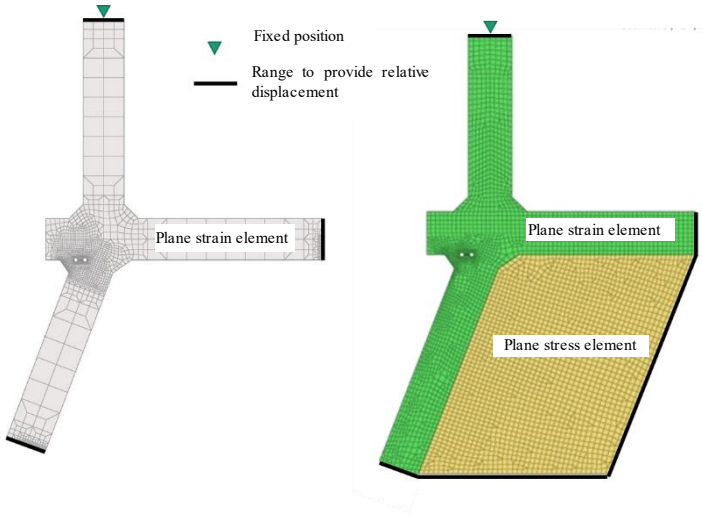

9.7.2.4 Net Scantlings

1 Net scantling t_{n25} is to be used for the three-hold model and the solid model.

2 In modelling the solid model and 2-D shell model with the net scantling, the net scantling geometry is to be determined by making the corrosion deduction from the gross dimensions of the plating and the weld according to the following procedure.

(1) Obtain the corrosion addition t_C (mm) according to the corrosive environment of the plating considered.

$$t_C = Roundup_{0.5}(t_{C1} + t_{C2}) + 0.5$$

(2) Deduct t_{deduct_plate} obtained by the following formula from both side surfaces of the plating.

$$t_{deduct_plate} = 0.25\, t_C/2$$

(3) Deduct t_{deduct_weld} obtained by the following formula from the surfaces of the weld. t_{Ci_p1} and t_{Ci_p2} are the corrosion addition (mm) of one side of the same surface of the weld of two plates connected at the weld being assessed.

$$t_{deduct_weld} = 0.25 \max(t_{Ci_p1}, t_{Ci_p2})$$

(4) Connect the intersection points on the surface of the plating from which corrosion deduction is made and the surface of the weld from which the corrosion deduction is made to determine the shape of the corroded weld (*See* **Fig. 9.7.2-4**).

Fig. 9.7.2-4 Weld Shape after Corrosion Deduction

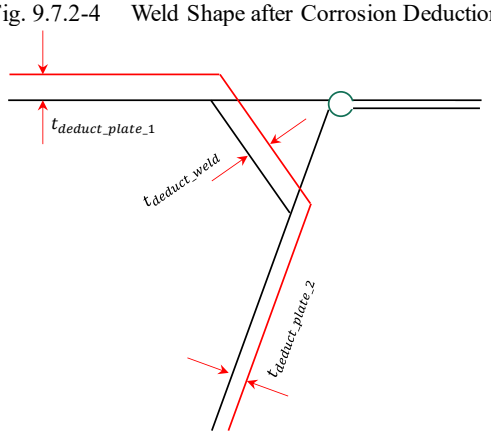

9.7.3 Fatigue Strength Assessment

9.7.3.1 General

1 In fatigue strength assessments, judgment of fatigue strength is to be based on the cumulative fatigue damage calculated from the effective notch stress range.

2 The mean stress effect, thickness effect and the effect of corrosive environment are disregarded in calculation of the cumulative fatigue damage at the weld root.

9.7.3.2 Effective Notch Stress Range

1 The effective notch stress range (N/mm^2) used for fatigue assessment is to be according to the following formula:

$$\Delta\sigma_{EN,(j)} = f_R \cdot \max_i\left(\Delta\sigma_{EN,i(j)}\right)$$

f_R: Correction factor corresponding to the wave environment given in 9.5.2.1

$\Delta\sigma_{EN,i(j)}$: Effective notch stress range (N/mm^2) in wave condition "*i*" for loading condition "*j*", taken as the absolute value of the difference between the effective notch stresses obtained in wave conditions *i*1 and *i*2.

2 The effective notch stress range $\Delta\sigma_{EN,i(j)}$ is to be calculated using the stress in the same elements along the bottom of the notch. The stress range of the element where the peak stress occurs is to be used as the effective notch stress range of the notch.

9.7.3.3 Cumulative Fatigue Damage

1 The cumulative fatigue damage for the fatigue design life is to be in accordance with the following formula:

$$D_{EN} = \sum_j \alpha_{(j)} D_{EN(j)}$$

$\alpha_{(j)}$: Fraction of time of loading condition (*j*) given in Part 2

$D_{E(j)}$: Cumulative fatigue damage for the fatigue design life in loading condition (*j*)

2 Cumulative fatigue damage for the fatigue design life in loading condition (*j*) according to the following formula:

$$D_{E(j)} = \frac{N_{FD}}{K_2} \frac{\Delta\sigma_{FS,EN(j)}^m}{(\ln N_R)^{m/\xi}} \cdot \mu_{(j)} \cdot \Gamma\left(1 + \frac{m}{\xi}\right)$$

N_{FD}: Number of cycles in the fatigue design life T_{FD} given in 9.5.4.2-1

K_2: Factor of the S-N curve used for assessment taken as $K_2 = 2.278 \times 10^{13}$

m: Inverse of the slope of the S-N curve taken as $m = 3$

$\mu_{(j)}$: Factor considering the change of the slope of the S-N curve according to the following formula:

$$\mu_{(j)} = 1 - \frac{\left\{\gamma\left(1 + \frac{m}{\xi}, \nu_{(j)}\right) - \nu_{(j)}^{-\Delta m/\xi} \cdot \gamma\left(1 + \left(\frac{m + \Delta m}{\xi}\right), \nu_{(j)}\right)\right\}}{\Gamma\left(1 + \frac{m}{\xi}\right)}$$

Δm: Difference of the inverse of the slope of the S-N curve at $N = 10^7$ cycles, where $\Delta m = 2$

$$\nu_{(j)} = \left(\frac{\Delta\sigma_q}{\Delta\sigma_{FS,EN(j)}}\right)^{\xi} \ln N_R$$

$\Delta\sigma_q$: Stress range (N/mm^2) of the S-N curve at $N = 10^7$ cycles, where $\Delta\sigma_q = 131.6$

9.7.3.4 Judgement of Fatigue Strength

The cumulative fatigue damage obtained in 9.7.3.3 is to be not more than 1.0.

Chapter 10 ADDITIONAL STRUCTURAL REQUIREMENTS

10.1 General

10.1.1 Overview

10.1.1.1

This Chapter provides the requirements shown in **Table 10.1.1-1** as additional structural requirements for the respective structures and impact load.

Table 10.1.1-1 Overview of Chapter 10

Section	Title	Overview
10.1	General	Overview of this Chapter
10.2	Bottom Structure	Additional requirements for the bottom structure
10.3	Side Structure	Additional requirements for the side structure
10.4	Deck Structure	Additional requirements for the deck structure
10.5	Bulkhead Structure	Additional requirements for the bulkhead structure
10.6	Strengthened Bottom Forward	Requirements for strengthening of the bottom forward
10.7	Structural Strength Against Bow Impact Pressure	Requirements for bow flare slamming and requirements for impact load of fat ships
10.8	Connections of Ends of Girders and Stiffeners	Requirements for connections of the ends of girders and stiffeners
10.9	Tank Structures for Sloshing	Requirements for the tank structures for sloshing

10.1.2 Application

10.1.2.1

The requirements in this Chapter are to be applied to the structural members in the cargo region and outside the cargo region if relevant.

10.2 Bottom Structure

10.2.1 General

10.2.1.1 Manholes and Lightening Holes

1 Manholes and lightening holes are to be provided in all non-watertight members to ensure accessibility and ventilation, except in way of pillars.

2 The number of manholes in tank tops is to be kept to the minimum compatible with securing free ventilation and ready access to all parts of the double bottom. Care is to be taken when locating the manholes to avoid the possibility of interconnection of the main subdivision compartments through the double bottom so far as practicable.

3 The covers of manholes in the tank tops in **-2** are to be of steel, and when no ceiling is provided in the cargo holds, the covers and their fittings are to be effectively protected against damage by the cargo.

4 Air and drainage holes are to be provided in all non-watertight members of the double bottom structure.

5 The proposed location and size of manholes and lightening holes are to be indicated in the plans submitted for approval.

10.2.1.2 Drainage

1 Efficient arrangements are to be provided for draining water from the tank top.

2 Regarding the application of **-1** above, small wells may be constructed in the double bottom in connection with drainage arrangements. Such wells are not to extend downward more than necessary. The vertical distance from the bottom of such a well to a plane coinciding with the keel line is not to be less than 0.5 h (h is specified in **2.4.1.1-1**) or 500 mm, whichever is greater, or is to satisfy the requirements specified in **2.4.1.1-4(1)**.

3 Other wells (e.g. for lubricating oil under main engines) may be permitted by the Society if it satisfies the requirements specified in **2.4.1.1-4(1)**. However, wells for lubricating oil below main engines may protrude into the double bottom below the boundary line defined by the distance h (h is specified in **2.4.1.1-1**) provided that the vertical distance between the well bottom and a plane coinciding with the keel line is not less than $0.5h$ or 500 mm, whichever is greater.

4 In the application of **-1** above, the requirements in the following **(1)** to **(3)** are to be complied with where bilge tanks are provided instead of bilge wells.

(1) Bilge tanks are to have sufficient strength as deep tanks

(2) Drain pipes leading to bilge tanks are to comply with the requirement in **13.5.8, Part D**.

(3) Bilge tanks are to be provided with manholes and covers for the purpose of conducting internal inspections easily.

10.2.1.3 Striking Plates

Striking plates of adequate thickness or other arrangements are to be provided under sounding pipes to prevent the sounding rod from injuring the ship's bottom plating.

10.2.2 Girders and Floors

10.2.2.1 Reinforcement for Docking*

1 The bottom structure is to have adequate strength to withstand the reaction force from the blocks in docking.

2 For ships with longitudinal framing system, docking brackets are to be provided at the appropriate space to the centre girder between the floors as reinforcement for docking. Such brackets are to be provided so as to reach the adjacent bottom longitudinals and are to be connected to the centre girders, bottom shell plating, and bottom longitudinals.

3 The thickness of the brackets in **-2** above is not to be less than that obtained from the following formula. However, the thickness need not be greater than the net offered thickness of the adjacent floor.

$$t = 0.6\sqrt{L_C}\ (mm)$$

10.2.2.2 Web Stiffeners

Girders and floors are to be appropriately reinforced by stiffeners.

10.2.2.3 Under Pillars or Toes of End Brackets for Bulkhead Stiffeners

Appropriate reinforcement is to be provided under pillars or toes of end brackets for bulkhead stiffeners by means of additional side girders or floors.

10.2.3 Bottom Shell Plating

10.2.3.1 Keel Plates

1 The breadth of the keel plate over the whole length of the ship is not to be less than that obtained from the following formula:

$$2L_C + 1000\ (mm)$$

2 The thickness of the keel is not to be less than the net offered thickness of the adjacent bottom shell plating.

10.2.3.2 Bilge Keels*

1 Bilge keels are not to be welded directly to bilge strakes. They are to be attached by pad plates such as flat bars.

2 Pad plates are, in principle, to have the same yield strength as bilge strakes. However, the use of grade A steel is deemed acceptable.

3 The butt welds of bilge keels and bilge strakes are to be appropriately separated from those of pad plates.

4 Scallop are, in principle, not allowed in bilge keels.

10.2.4 Inner Bottom Plates

10.2.4.1 General

Butt joints of inner bottom plating in the midship part are generally not to be arranged at the knuckle line with small angle at the inner bottom.

10.3 Side Structure

10.3.1 Side Frames

10.3.1.1 General

1 Side frames are not to extend through the tops of water tanks or oil tanks, unless the effective watertight or oiltight arrangements are specially submitted and approved.

2 Where large openings are provided in the web, the scantlings of the frames are to be appropriately increased.

3 Thorough consideration is to be given to the concentration of stress and other forces acting on the lower end construction of side frames.

10.3.1.2 Connections of Side Frames

1 Where side frames and lower brackets are overlapped, the side frames are to be overlapped with the brackets by at least 1.5 times the depth of frame sections and are to be effectively connected thereto.

2 The upper ends of the side frames are to be effectively connected by brackets with the deck and the deck beam. Where the deck at the top of the frames is longitudinal framing system, the upper end brackets are to be extended and be connected to the deck longitudinals adjacent to the frames.

10.3.1.3 Side Frames between Decks

1 Side frames located between decks are, in association with the side frame at the lowest deck, are to be determined in consideration of maintaining the continuity of the strength of the side frames from the bottom to the uppermost deck.

2 Where a side frame is installed between decks, the structure is to maintain sufficient transverse strength of ships by means of efficient tween deck bulkheads provided above the hold bulkheads or by web frames extended at proper intervals.

10.3.2 Cantilever Beam Systems

10.3.2.1 Cantilever Beams

The cantilever beams are to comply with the following **(1)** and **(2)**.

(1) Web plates adjacent to the inner edge of end brackets are to be specially reinforced.

(2) Cantilever beams supporting a hatch cover of the lower deck from the uppermost deck are to comply with the following **(a)** and **(b)**.

(a) The leg of the fillet weld at the joint between the web and deck girder on the hatch side is to be $F1$.

(b) Where the stiffeners are provided to prevent web plates from buckling, consideration is to be given to the arrangement of the ends of such stiffeners to ensure that there are no stress concentrations at the connections between web plates and the members supporting hatch covers on lower decks.

10.3.2.2 Connection of Cantilever Beams to Web Frames*

The cantilever beams and web frames supporting them are to be effectively connected by brackets as specified in the following **(1)** to **(4)**.

(1) The radius of curvature of the free edge of a bracket is not to be less than the depth of the cantilever beam at the edge of the bracket.

(2) The thickness of the bracket is not to be less than the thickness of the cantilever beam or the web thickness of the web frame, whichever is greater.

(3) The brackets are to be properly strengthened by stiffeners.

(4) A face plate with a cross-sectional area not less than the cross-sectional area of the cantilever or face plate of the web frame, whichever is greater, is to be installed on the free edge of the bracket, which is to be connected with the cantilever and the face plate of the web frame.

10.3.3 Transverse Web Frames

10.3.3.1 Continuity of Transverse Strength

Transverse web frames are to be provided as required between decks to ensure the continuity of transverse strength of the web frames in the hold and machinery spaces below the bulkhead deck.

10.3.3.2 Beams at Upper End of Web Frames

When deck beams are provided on the upper end of web frames, consideration is to be given so as to increase their strength and stiffness.

10.3.3.3 Web Frames Supporting Side Longitudinals

Web frames supporting side longitudinals are to be arranged at the sections where floors are provided.

10.3.3.4 Web Frames Supporting Cantilever Beams

Web frames supporting cantilever beams are to be effectively connected so as to maintain the continuity of strength of the web frame or floor located below it.

10.3.4 Side Stringers of Single Side Structure

10.3.4.1 Stiffeners

Stiffeners extending the entire width of the side stringer are to be provided on the web of the side stringer in every other frame.

10.3.4.2 Connection of Side Stringers to Web Frames

1 The side stringer and web frame are to be connected over the entire depth of the web frame.

2 When the depth of the side stringer and the web frame is equal, the face plate of the side stringer is to be connected with the face plate of the web frame by using an effective bracket.

10.3.4.3 Connection of Side Stringers to Transverse Bulkheads

The side stringer is to be effectively connected to the transverse bulkhead by using a bracket with the appropriate size.

10.3.5 Side Shell Plating

10.3.5.1 Sheer Strake for Midship Part *

1 The thickness of the sheer strake for the midship part is not to be less than 75 % of the net offered thickness of the stringer plate. However, where the requirements of **Chapter 8** are satisfied, the thickness of the sheer strake may be considered appropriate.

2 The thickness of the sheer strake for the midship part is not to be less than the net offered thickness of the adjacent side shell plating. However, where the requirements of **Chapter 8** are satisfied, the thickness of the sheer strake may be considered appropriate.

10.3.5.2 Special Consideration for Contact with Wharf

Where the shell plating is prone to denting due to contact with the wharf, special consideration is to be given to the thickness of the shell plating.

10.3.6 Arrangements to Resist Panting Abaft of Collision Bulkhead and Forward of the Fore End of the Machinery Space Bulkhead*

10.3.6.1

For ships with single side structure in cargo region, appropriate reinforcement is to be applied to the side shell structure abaft of the collision bulkhead and forward of the fore end if the machinery space bulkhead so as to maintain the continuity of the strength of the structures in the compartments forward and aft of such bulkheads.

10.3.7 Double Side Structure

10.3.7.1 General

1 Where the side shell is a longitudinal framing system, the longitudinal bulkhead forming the double side structure is to be a longitudinal framing system.

2 Where longitudinals are provided on side shell and inner hull, they are to be continuous over the entire parallel part of the cargo region. The longitudinals are to be effectively connected to the transverse girders in the double side structure. The longitudinal framing systems of the side shell is to be extended to the outside of the cargo region as far as practicable.

3 Where the inner hull and the inner bottom plating are combined, considerations are to be given to the structural arrangement to prevent stress concentration.

10.3.7.2 Forward and Aft Ends of Double Side Structure

At the forward and aft ends of the double side structure, the continuity of the strength of the structure of the compartments forward and aft of the structure is to be fully considered.

10.4 Deck Structure

10.4.1 Camber of Weather Deck*

10.4.1.1

Appropriate camber is to be provided in the weather deck.

10.4.2 Deck Longitudinals and Deck Beams

10.4.2.1 Deck Longitudinals*

Deck Longitudinals are to be supported by deck transverses of appropriate spacing.

10.4.2.2 Deck Beams*

Deck beams are to be provided on every side frame and are to be connected to the side frames by brackets.

10.4.2.3 Deck Longitudinals and Deck Beams Supporting Especially Heavy Loads

The deck longitudinals and deck beams supporting especially heavy loads or arranged at the ends of superstructures or deckhouses, in way of masts, winches, windlasses and auxiliary machinery, etc. are to be properly reinforced by increasing the scantlings of the longitudinals and beams, or by the addition of deck girders or pillars.

10.4.2.4 Deck Longitudinals and Deck Beams Supporting Unusual Cargoes

The section modulus of deck longitudinals and deck beams of decks carrying cargo loads which cannot be treated as evenly distributed loads is to be determined by taking into account the load distribution of each particular cargo.

10.4.3 Deck Girders and Deck Transverses

10.4.3.1 Construction*

1 Deck girders and deck transverses are to be composed of face plates provided along the lower edge.

2 The depth of the girder is not to be less than 2.5 times that of the slot for beams, and is to be kept constant between two adjacent bulkheads of longitudinal girders.

3 The girders are to have sufficient rigidity to prevent excessive deflection of decks and excessive additional stresses in deck beams.

10.4.3.2 End Connection*

1 Bulkhead stiffeners or girders at the ends of deck girders are to be suitably strengthened to support the deck girders.

2 Where the end of a girder is terminated at a bulkhead, a bracket is to be provided on the opposite side of the bulkhead. (*See* **Fig. 10.4.3-1**)

3 The continuity of deck girders is to be in accordance with the following **(1)** and **(2)**.

(1) The web and face plate of the girders included in the calculation of the section modulus of the transverse cross section are to penetrate the bulkhead or is to be connected to the bulkhead with the same effectiveness. (*See* **Fig. 10.4.3-2**)

(2) When a deck girder is not continuous, the girder is to be adequately overlapped with the adjacent girder. (*See* **Fig. 10.4.3-3**)

Fig. 10.4.3-1

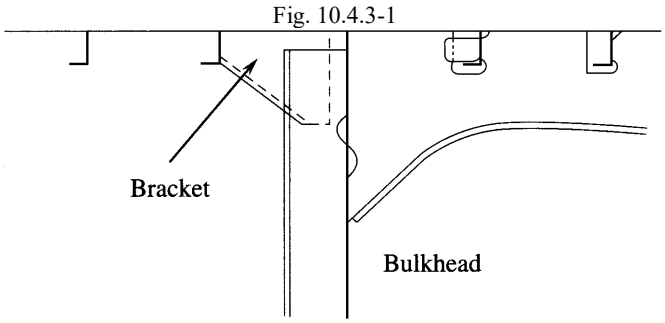

Fig. 10.4.3-2

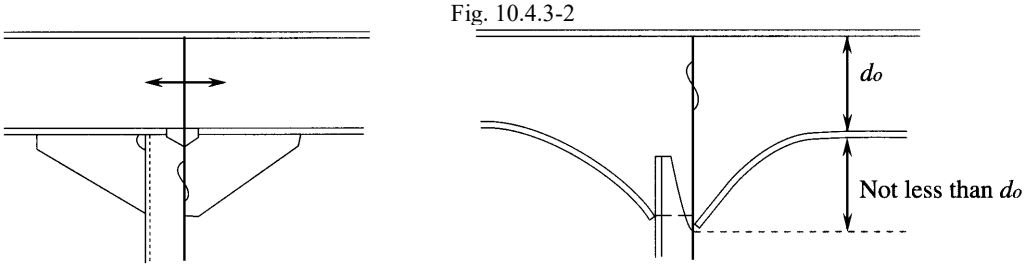

Fig. 10.4.3-3

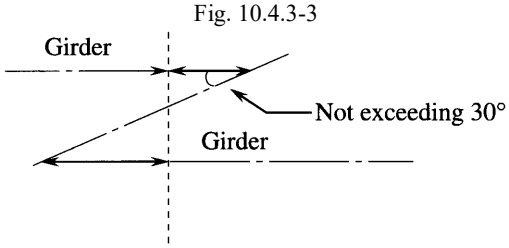

10.4.3.3 Hatch Side Girders (Girders Having Deep Coamings on Deck)

Where deep coamings are provided on decks, as in the case of hatchways on weather decks, the horizontal coaming stiffener and the coaming up to its stiffener may be included in the calculation of the section modulus, subject to the approval by the Society.

10.4.3.4 Strength Continuity at Hatchway Corners

At hatchway corners, the face plates of hatch coamings and longitudinal deck girders or their extensions and the face plates on both sides of the hatch end girders are to be effectively connected so as to maintain strength continuity.

10.4.4 Decks

10.4.4.1 General*

Where a longitudinal framing system is used for the cross deck, adequate care is to be taken to prevent buckling of the deck.

10.4.4.2 Watertightness of Decks

1 Weather decks, except where hatchways and other openings specified in **Chapter 14** are provided, are to be made watertight.

2 Special consideration is to be given to maintaining watertightness in decks where watertightness is required to comply with **2.3**. The decks in which watertightness is required are to be in accordance with the following **(1)** and **(2)**.

(1) Deck structures are to comply with related requirements of **Chapter 6** for the pressure due to the head of water in the most severe conditions at the intermediate or final stages of flooding specified in **2.3**. In this case, such decks are to be regarded as the part of the deck which forms bulkhead recesses.

(2) Where trunks or other constructions penetrating watertight decks are provided, such trunks are to be capable of withstanding the pressure due to a head of water up to the bulkhead deck and the head of water in the most severe conditions at the intermediate or final stages of flooding specified in **2.3**.

10.4.4.3 Continuity of Steps of Decks

When the strength deck or effective decks (the decks below the strength deck which are considered as strength members in the longitudinal strength of the hull; same in the following) change in level, special care is to be taken so that the load due to vertical bending moment can be appropriately transmitted. The change in height is to be accomplished by gradual sloping, or by extending each of the structural members which form the decks and effectively joining them by girders, brackets, or other means.

10.4.4.4 Compensation for Openings*

1 Hatchways and other openings on strength or effective decks are to have well-rounded corners. Appropriate chamfering is to be provided, and appropriate reinforcement is to be applied by increasing the thickness of the deck in that area or installation of doubling plates, as required.

2 When all corners of deck openings are reinforced as specified in **-1** above by a thicker plate or a doubling plate, **(1)** to **(4)** below are to be followed.

(1) Regions where thicker plates or doubling plates are required

Strength deck: Within $0.75L_C$ amidship

Effective second deck: $0.6L_C$ amidship

The third deck or below: In principle, a doubling plate is not required.

Superstructure and long deckhouse: Doubling within $0.6L_C$ amidship of decks immediately above the strength deck.

(2) Thicker plate or doubling plate may be properly reduced depending on the location of the opening. (*See* **Fig. 10.4.4-1**)

(3) The dimensions and thickness of the doubling plate or thicker plate are to be determined considering the stress concentration at the opening.

(4) No welded joints are permitted at the corners of openings in the strength deck. (The welded joints are to be at an adequate distance from the end of curvature *R*.) (*See* **Fig. 10.4.4-2**)

Fig. 10.4.4-1

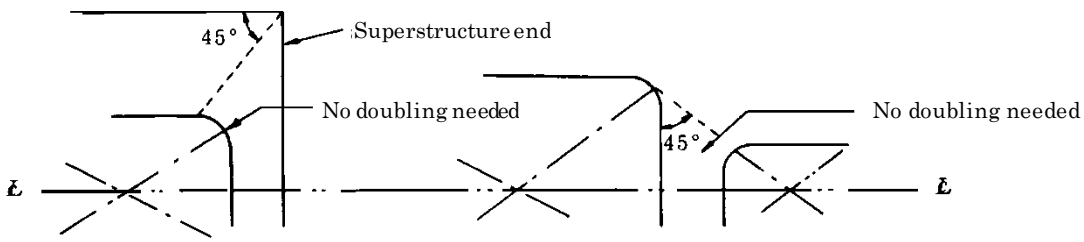

Fig. 10.4.4-2

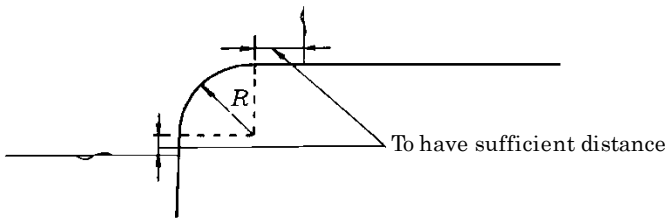

3 Where attachments such as slant plates or protective means are provided at the corner of a cargo hatch, the attachment is not to be welded directly to the strength deck.

10.4.4.5 Reinforcement of Decks for Unusually Long Machinery Openings

1 For unusually long machinery openings, suitable strengthening is to be made by means of adequate cross ties provided at each deck or equivalent arrangements.

2 When the length of the machinery openings exceeds about 20 *m*, a cross tie is to be provided at the mid-length of the opening.

10.4.4.6 Rounded Gunwales

1 Rounded gunwales, where adopted, are to have a sufficient bending radius for the thickness of the plates.

2 Where rounded gunwales are made of steel plate of Grade *D* or Grade *E*, the inner radius of the curvature is not to be less than 20 *times* the thickness of the gunwale plate. However, where the width of the sheer strake that is bent to form the rounded gunwale is not less than 500 *mm* plus the plate width of the strake prescribed in **3.2.2.1** or the method of bending work is especially approved by the Society, the radius may be reduced down to 15 *times* the plate thickness.

10.4.4.7 Thickness of Decks Supporting Unusual Cargoes

The thickness of plates of decks carrying cargo loads which cannot be treated as evenly distributed loads is to be determined by taking into account the load distribution of each particular cargo.

10.4.5 Pillars

10.4.5.1 Pillars in Tween Decks

Tween deck pillars are to be arranged directly above those under the deck, or effective means are to be provided for transmitting their loads to the supports below.

10.4.5.2 Pillars in Holds*

Pillars in holds are to be provided in line with the double bottom girders or as close thereto as practicable, and the structure above and under where the pillars are connected is to be of ample strength to provide effective distribution of the load.

10.4.5.3 End Connection of Pillars

The head and heel of pillars are to be secured by thick doubling plates and brackets as necessary. The head and heel of pillars which may be subject to tensile loads in locations such as those supporting bulkhead recesses, the tops of shaft tunnels and the tops of deep tanks are to be sufficiently secured to withstand these loads.

10.4.5.4 Reinforcement of Structures Connected to Pillars

Where pillars are connected to the deck plating or frames, these structures are to be sufficiently strengthened.

10.4.5.5 Outside Diameter of Round Pillars

The outside diameter of solid round pillars and tubular pillars is not to be less than 50 *mm*.

10.4.5.6 Pillars Provided in Deep Tanks

Pillars provided in deep tanks are not to be tubular pillars.

10.4.5.7 Bulkheads in lieu of Pillars

Bulkheads supporting deck girders are to be stiffened in such a manner as to provide supports not less effective than that required for pillars.

10.4.5.8 Casings in lieu of Pillars

Casing used in lieu of pillars are to be of sufficient scantlings to withstand the deck load and lateral pressure.

10.4.6 Decks Subject to Helicopter Loads

10.4.6.1 Application

This **10.4.6** is to be applied to helicopter decks as defined in **3.2.26, Part R** and helicopter landing areas as defined in **3.2.55, Part R**.

10.4.6.2 Longitudinals and Beams of Decks Subject to Helicopter Loads

The section moduli of the longitudinals and beams of a deck subject to helicopter loads are not to be less than that obtained by the following formula:

$$C_{safety}\frac{M}{\sigma_Y}\times 10^3\ (cm^3)$$

σ_Y: Specified minimum yield stress (N/mm^2)

C_{safety}: Safety factor taken as 1.25.

M: Maximum bending moment (kN-m) acting on the longitudinals and beams. This value is to be the value of **(1)** or **(2)** below, whichever is greater. However, this value is to be specified in **(1)** when $\ell_1 \geq \ell$.

(1) When a load of helicopter acts (*See* **Fig. 10.4.6-1(a)**)

$$M = \frac{7P\ell}{40}$$

(2) When two loads of helicopter act (*See* **Fig. 10.4.6-1(b)**)

$$M = \frac{P(\ell-\ell_1)(7\ell-3\ell_1)}{20\ell}$$

P: Load of helicopter (kN) (*See* **4.8.3.1**)

ℓ: Spacing of longitudinals and beams (m)

ℓ_1: Distance (m) between loads of helicopter P acting on longitudinals and beams

Fig. 10.4.6-1 Loading Condition

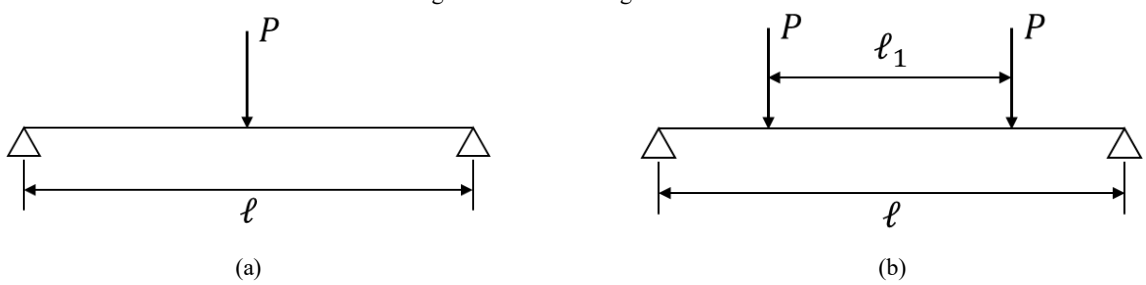

10.4.6.3 Thickness of Deck Plates Subject to Helicopter Loads

The thickness of the deck plate subject to helicopter loads is to be according to either the following **(1)** or **(2)**.

(1) Where the centre-to-centre distance of the helicopter loads in the panel is not less than $2S+0.3$.

$$C\sqrt{\frac{2S-0.3}{2S+0.3}\cdot P\times 10^3}\ (mm)$$

C: Coefficient according to the following formula:

$$C = \frac{1}{2}\sqrt{\frac{C_{coll}C_{load}}{\sigma_Y}}$$

C_{coll}: Safety coefficient for plastic collapse of the plate to be taken as 1.7.

C_{load}: Safety coefficient for dynamic effect of ship motion to be taken as 1.2.

S: Spacing (m) of longitudinals and beams

P: Load (kN) of helicopter (*See* **4.8.3.1**)

(2) Where the centre-to-centre distance of the helicopter loads in the panel is less than $2S + 0.3$ (*See* **Fig. 10.4.6-2**)

$$C\sqrt{\frac{2S - 0.3}{2S + 0.3 + e} \cdot 2P \times 10^3}\ (mm)$$

C, S, P: As specified in **(1)** above.

e: Centre-to-centre distance (m) of the helicopter loads in the panel (*See* **Fig. 10.4.6-2**)

Fig. 10.4.6-2 Measurement of e

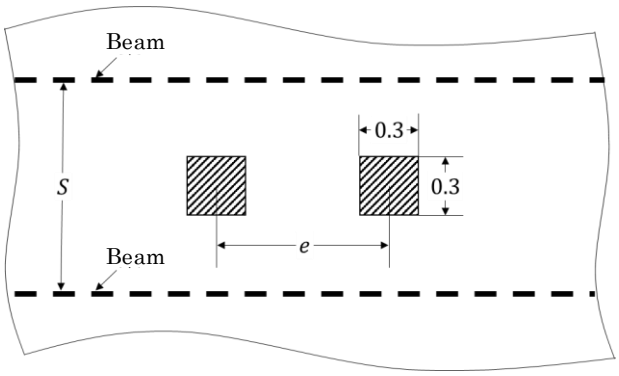

10.5 Bulkhead Structure

10.5.1 Construction of Watertight Bulkheads

10.5.1.1 Construction

1 Where the watertight bulkheads specified in **Chapter 2** are not extended up to the strength deck, web frames or partial bulkheads that reaches the strength deck are to be provided immediately or nearly above the main watertight bulkhead so as to maintain the transverse strength of the hull.

2 Where the length of the hold exceeds 30 m, suitable means are to be provided so as to maintain the transverse strength of the hull.

10.5.1.2 Increase of Thickness of Bulkhead Plates of Special Parts

Notwithstanding the requirements in **6.3**, the bulkhead plating is to be doubled or increased in thickness in way of the stern tube opening or propelling shaft opening.

10.5.1.3 Construction of Bulkheads in way of Watertight Doors

1 Where stiffeners are cut or the spacing of stiffeners is increased in order to provide a watertight door in a bulkhead, the opening is to be suitably framed and strengthened so as to main the full strength of the bulkhead. The door frames are not to be considered as stiffeners.

2 The section modulus of the stiffeners adjacent to both sides of sliding doors (indicated with an asterisk * in **Fig. 10.5.1-1**) is not to be less than that calculated as the stiffeners of a deep tank bulkheads.

Fig. 10.5.1-1

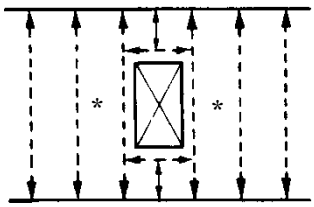

10.5.1.4 Plane Bulkheads*

The eends of the stiffeners of the bulkhead are to be appropriately reinforced by brackets.

10.5.1.5 Corrugated Bulkheads

The construction of corrugated bulkheads is to be in accordance with the followings.

(1) Stiffeners are to be provided at the ends of the deck girder.

(2) Pads or headers are to be installed at the position where the bracket end is connected to the bulkhead.

(3) The corrugation angle ϕ is not to be less than 45°. (*See* **Fig. 10.5.1-2**)

(4) Girders installed on corrugated bulkheads are to be a balanced girder, except where the strength of such girders is not less than that of girders installed on a plane bulkhead. In the calculation of the actual section modulus of the girder, the depth of the girder is to be as shown in **Fig. 10.5.1-3**, and the corrugated bulkhead cannot be taken into account in the calculation of the actual section modulus of the girder.

(5) The lower end of the corrugated bulkhead is to have the construction shown in **Fig. 10.5.1-4 (A)** or **(B)**. The construction of the upper end is recommended to follow the construction of the lower end.

Fig. 10.5.1-2

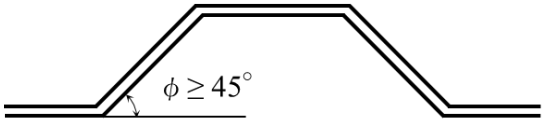

Fig. 10.5.1-3 Measurement of Depth of Girder

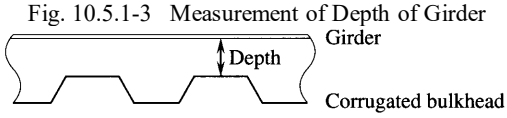

Fig. 10.5.1-4

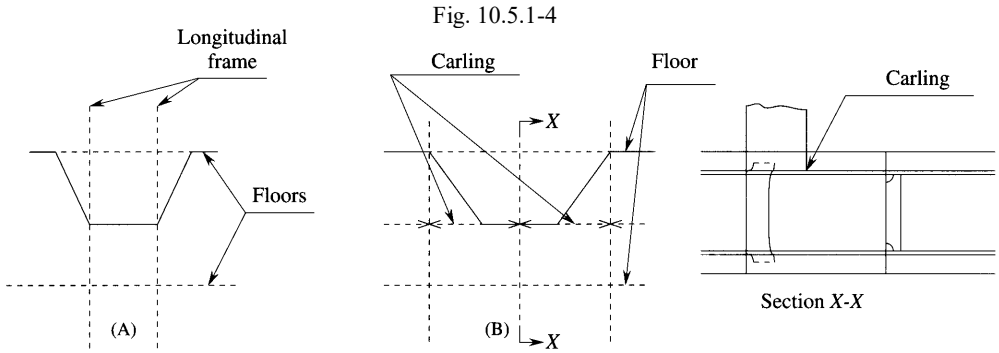

10.5.1.6 Other Watertight Construction

Trunks, etc. required to maintain watertightness are to satisfy requirements equal to those of a watertight bulkhead.

10.5.2 Deep Tanks

10.5.2.1 Application

1 Watertight divisions (other than those specified in **10.5.2.2-4**), peak tank bulkheads and boundary bulkheads of deep tanks (excluding the deep tanks for the carriage of oil having a flashpoint below 60 °C) are to be constructed in accordance with the requirements of **10.5.2**.

2 The bulkheads of deep tanks carrying oils with a flashpoint below 60 °C are to comply with the requirements in **Part 2-7 (Tankers)** in addition to those in **10.5.2**.

10.5.2.2 Divisions in Tanks

1 Deep tanks are to be of a proper size and to be provided with such longitudinal watertight divisions as necessary to meet the requirements for stability in service conditions as well as while the tanks are being filled or discharged.

2 Tanks for fresh water or fuel oil or those which are not intended to be kept entirely filled in service conditions are to have additional divisions or deep swash plates as necessary to minimize the dynamic forces acting on the structure.

3 Where it is impracticable to comply with the requirements in **-2**, the scantlings of the structural members are to be properly

increased.

4 Longitudinal watertight divisions that will be subjected to pressure from both sides in tanks which are to be entirely filled or emptied in service conditions may be of the scantlings required for ordinary watertight bulkheads. In such cases, the tanks are to be provided with fittings such as deep hatches and inspection plugs in order to ensure that the tanks are kept full in service conditions.

10.5.2.3 Deep Tank Bulkheads

1 Stiffeners of deep tank bulkheads, which are not in line with the stiffeners of tween deck bulkheads at the top of the tank, are to have bracket ends.

2 Where efficient supporting members (cross ties or struts) are provided across deep tanks connecting girders on each side of the tank, the following **(1)** to **(3)** are to be followed.

(1) The span (ℓ) of girders may be measured between the end of the girder and the centre of the cross tie or between the centre of adjacent cross ties.

(2) The sectional area of cross ties is not to be less than that obtained by the following formula:

$$C_{safety}\frac{Sb_sP}{\sigma_Y}\times 10^{-2}$$

C_{safety}: Safety coefficient taken as 1.2

S: Breadth (m) of the area supported by the girders

b_s: Breadth (m) of the area supported by the cross ties

σ_Y: Specified minimum yield stress (N/mm^2)

P: Lateral pressure (kN/m^2) specified in **4.4.2.2-2** and **4.4.3.2**, to be calculated at the end of the cross ties. However, in the calculation of P_{ld} specified in **Table 4.4.2-8**, envelope acceleration in the transverse direction a_{Ye-l} is to be 0 (zero).

(3) The ends of cross ties are to be bracketed to girders.

3 Where a corrugated bulkhead forms part of a deep tank, construction of the corrugated bulkhead is to be in accordance with the following **(1)** and **(2)** in addition to **10.5.1.5**.

(1) Upper and lower structures supporting corrugated bulkheads

(a) In cases where stools are not fitted with corrugated bulkheads, the standard upper and lower structures supporting the corrugated bulkheads are to be as specified in **Table 10.5.2-1**.

(b) In cases where a stool is fitted with a corrugated bulkhead, the standard lower stool and structures supporting the lower stool are to be in accordance with the following **i)** and **ii)**.

i) The thickness of the top plate and the uppermost part of the side plating of the lower stool (side plate located within the region from the stool top plate to the depth of the corrugation) is to be the same as that of the corrugated flange at the bottom of the corrugated bulkhead.

ii) The bottom of the stool is to be joined to the floor in the double bottom structure in the case of transverse bulkheads, and to the girder (centre girder or side girder) in the double bottom structure in the case of longitudinal bulkheads. In addition, the thickness of the upper part of floors and girders is to be the same as that of the side plating of the stool.

(c) In cases **i)** and **ii)** above, openings such as slots or scallops providing penetration for stiffeners to a floor, web of traverses or girders are to be covered by collar plates.

(2) Construction of corrugated bulkheads

The corrugation angle ϕ of a corrugated bulkhead is not to be less than 55°. (*See* **Fig. 10.5.2-2**)

Table 10.5.2-1 Upper and Lower Structures Supporting Corrugated Bulkheads

Type of corrugated bulkhead		Location	Supporting structure
Vertically corrugated bulkhead	Transverse	Lower	Floors with a thickness that is the same as that of the lower part of a corrugated bulkhead are to be arranged beneath both flanges of the corrugated bulkhead, or a floor with a thickness that is the same as that of the lower part of the corrugated bulkhead is to be arranged beneath one flange and a bracket that has the same thickness as the lower part of the corrugated bulkhead and a web depth that is not less than 0.5 times the depth of the corrugation is to be arranged beneath the other side flange of the corrugated bulkhead. (*See* **Fig. 10.5.2-1**)
	Longitudinal	Upper	An on-deck longitudinal girder or an on-deck longitudinal with a web thickness of not less than 80 % of the thickness of the upper part of a corrugated bulkhead is to be arranged above both flanges of the corrugated bulkhead.
		Lower	Girders (centre girders or side girders) with a thickness that is the same as that of the lower part of a corrugated bulkhead are to be arranged beneath both flanges of the corrugated bulkhead, or a girder with a thickness that is the same as that of the lower part of the corrugated bulkhead is to be arranged beneath one flange of the corrugated bulkhead and an inner bottom longitudinal with a thickness that is the same as that of the lower part of the corrugated bulkhead and a web depth that is not less than 0.5 times the depth of the corrugation, or a stiffener equivalent thereto, is to be arranged beneath the other side flange of the corrugated bulkhead.
Horizontally corrugated bulkhead	Transverse	Lower	A floor with a thickness that is the same as that of the lower part of a corrugated bulkhead is to be arranged beneath the web of the corrugated bulkhead.
	Longitudinal	Upper	An on-deck girder with a thickness that is not less than 80 % of the thickness of the upper part of the corrugated bulkhead is to be arranged above the web of the corrugated bulkhead.
		Lower	A girder (centre girder or side girder) with a thickness that is the same as that of the lower part of the corrugated bulkhead is to be arranged beneath the web of the corrugated bulkhead.

Fig. 10.5.2-1 Examples of Structures Supporting Vertically Corrugated Bulkheads (Transverse Bulkheads)

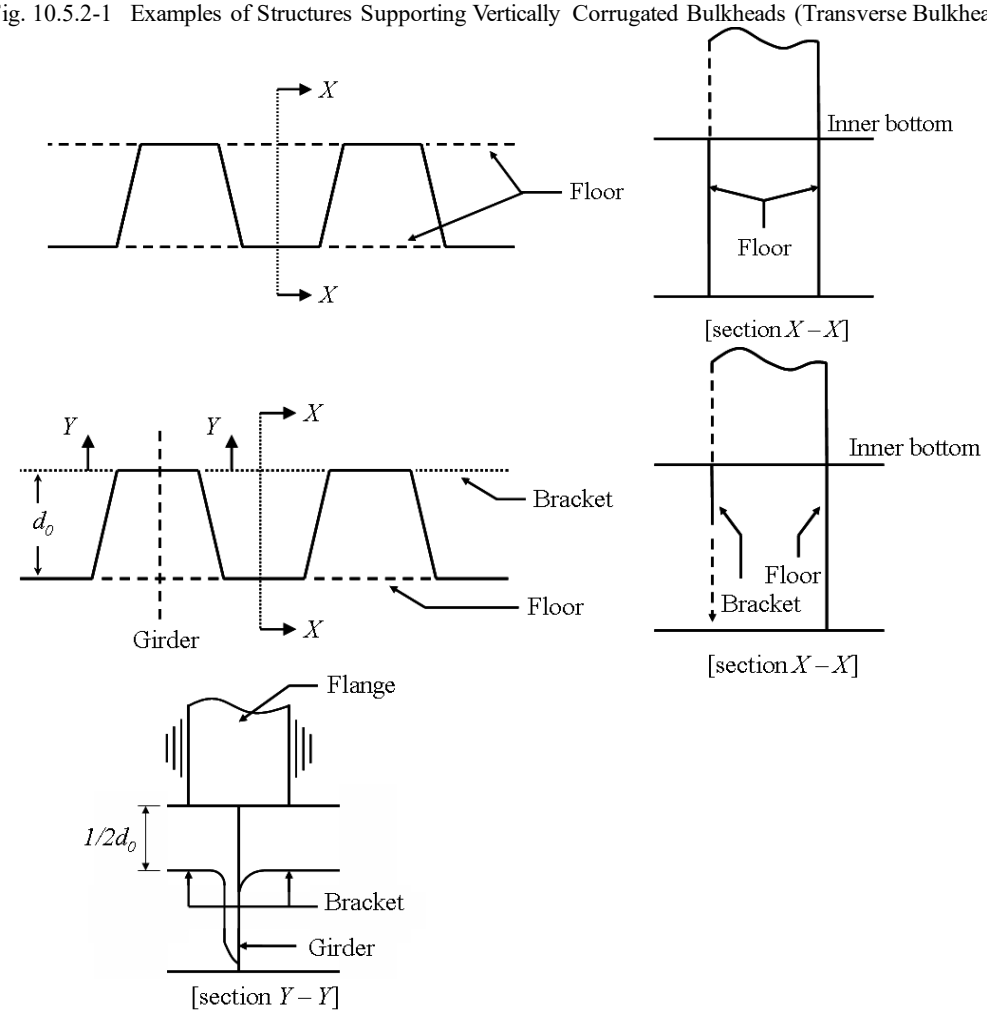

Fig. 10.5.2-2 Definition of Corrugation Angle of a Corrugated Bulkhead (ϕ)

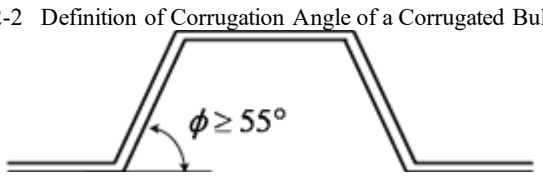

10.5.2.4 Fittings of Deep Tanks

1 Limbers and air holes are to be cut suitably in the structural members to ensure that air or water does not remain stagnated in any part of the tank.

2 Efficient arrangements are to be made for draining bilge water from the top of deep tanks.

3 The inspection plugs provided on deep tank tops as required in **10.5.2.2-4** is to be located at readily accessible positions, and the plugs are to be open as far as is practicable when filling the tank with water.

10.6 Strengthened Bottom Forward

10.6.1 General

10.6.1.1 Application

1 The requirements of this **10.6** are to be applied to ships having a bow draught under $0.037L_{C230}$ in ballast condition. The ballast condition means the condition where the ballast is loaded only in ballast tanks such as the dedicated ballast tanks and separate ballast tank and in holds also used for ballasting. Where more than one ballast condition is planned for a ship, these requirements can be applied on the basis of the specific ballast condition provided in the loading manual as the ballast condition used in stormy weather. However, this provision does not include the exceptional ballast condition where the ballast is loaded in cargo oil tanks only in stormy weather to ensure the safety of the ship. L_{C230} is the length of the ship according to **1.4.2.2**.

2 For ships subject to **10.6**, assessment of strengthened bottom forward is to be carried out in accordance with **10.6.2** or **10.6.3**.

3 The required scantlings specified in this **10.6** are to be net scantlings.

10.6.1.2 Range of Bottom Forward Strengthening

1 The part of the flat bottom of the ship forward from the position specified in **Table 10.6.1-1** is defined as the strengthened bottom forward.

Table 10.6.1-1 Range of Strengthened Bottom Forward

$V/\sqrt{L_C}$	1.1 or less	Exceeding 1.1 but 1.25 or less	Exceeding 1.25 but 1.4 or less	Exceeding 1.4 but 1.5 or less	Exceeding 1.5 but 1.6 or less	Exceeding 1.6 but 1.7 or less	Exceeding 1.7
Position (from the stem)	$0.15L_C$	$0.175L_C$	$0.2L_C$	$0.225L_C$	$0.25L_C$	$0.275L_C$	$0.3L_C$

2 In ships of which L_C and C_B are less than 150 m and 0.7 respectively, and the bow draught is $0.025L_{C230}$ or less in the ballast condition, the area of the strengthened bottom forward of the ship is to be expanded as follows. However, ships that carry a certain amount of cargo regularly, such as Container Ships, need not comply.

(1) The after end of the strengthened area is to be extended the distance a afterwards from the position required in **-1** above.

When $C_B = 0.7$: $a = 0$

When $C_B \leq 0.6$: $a = 0.05L_C$

For intermediate values of C_B, a is to be obtained by linear interpolation.

(2) In addition to **(1)** above, bottom areas whose tangential slope to the base line is less than 25° are required to be strengthened (this area is included in the range of the strengthened bottom forward). (*See* **Fig. 10.6.1-1**)

Fig. 10.6.1-1 Transverse Area of Bottom Forward to be Strengthened (y-z plane in coordinate system specified in **1.4.3.6**)

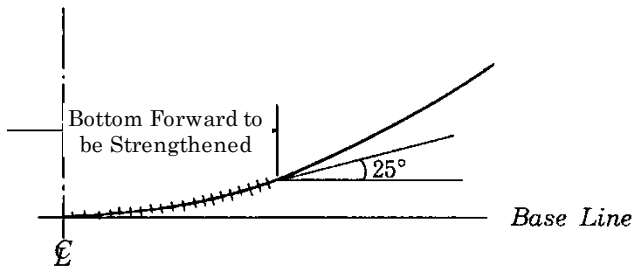

Table 10.6.1-2 Transverse Area of Bottom Forward to be Strengthened (Coordinate System in 1.4.3.6)

	Specifications of ship / $V/\sqrt{L_C}$	Ship with $L_C >$ 150 m or $C_B >$ 0.7, or where the bow draught in the ballast condition is larger than $0.025L_{C230}$	Ship with $L_C \leq 150\,m$ and $0.6 < C_B \leq 0.7$, and the bow draught in the ballast condition is not more than $0.025L_{C230}$	Ship with $L_C \leq$ 150 m and $C_B \leq 0.6$, and the bow draught in the ballast condition is not more than $0.025L_{C230}$
X-direction	1.1 or less	$0.85 < x/L_C$	$0.85 - 0.05\left(1 - \frac{C_B - 0.6}{0.1}\right) < x/L_C$	$0.80 < x/L_C$
	Exceeding 1.1 but 1.25 or less	$0.825 < x/L_C$	$0.825 - 0.05\left(1 - \frac{C_B - 0.6}{0.1}\right) < x/L_C$	$0.775 < x/L_C$
	Exceeding 1.25 but 1.4 or less	$0.80 < x/L_C$	$0.80 - 0.05\left(1 - \frac{C_B - 0.6}{0.1}\right) < x/L_C$	$0.75 < x/L_C$
	Exceeding 1.4 but 1.5 or less	$0.775 < x/L_C$	$0.775 - 0.05\left(1 - \frac{C_B - 0.6}{0.1}\right) < x/L_C$	$0.725 < x/L_C$
	Exceeding 1.5 but 1.6 or less	$0.75 < x/L_C$	$0.75 - 0.05\left(1 - \frac{C_B - 0.6}{0.1}\right) < x/L_C$	$0.70 < x/L_C$
	Exceeding 1.6 but 1.7 or less	$0.725 < x/L_C$	$0.725 - 0.05\left(1 - \frac{C_B - 0.6}{0.1}\right) < x/L_C$	$0.675 < x/L_C$
	Exceeding 1.7	$0.70 < x/L_C$	$0.7 - 0.05\left(1 - \frac{C_B - 0.6}{0.1}\right) < x/L_C$	$0.65 < x/L_C$
Y-direction		Corresponding to the Z-direction		
Z-direction		z = 0 (Flat section)	Region where the tangential slope to the base line is less than 25° (*See* Fig. 10.6.1-1)	

10.6.2 General Ships (Ship other than those with L_C of not more than 150 m, $V/\sqrt{L_C}$ of not less than 1.4 and C_B of not more than 0.7)

10.6.2.1 Application

For ships other than those subject to 10.6.3, 10.6.2 is to be applied.

10.6.2.2 Structural Arrangement

The structural arrangement is to be in accordance with the following **(1)** and **(2)**.

(1) Structural arrangement

(a) Between the collision bulkhead and $0.05L_C$ abaft the after end of the strengthened bottom forward, side girders are to be spaced not more than approximately 2.3 m apart (*See* Fig. 10.6.2-1). Where transverse framing is adopted, shell longitudinals are to be provided between the side girders, between the collision bulkhead and $0.025L_C$ abaft the after end of the strengthened bottom forward.

(b) Between the collision bulkhead and the after end of the strengthened bottom forward, solid floors are to be provided at every frame in the transverse framing system, or at least at alternate frames in the longitudinal framing system.

(c) The solid floors are to be reinforced by providing vertical stiffeners in way of shell longitudinals. However, where the spacing of the shell longitudinals is especially small and the solid floors are adequately reinforced, the vertical stiffeners for the solid floors may be provided on alternate shell longitudinals.

(2) Where the structural arrangement of the strengthened bottom forward is different from the structural arrangement specified in **(1)** above, the following **(a)** to **(c)** are to be applied:

(a) The thickness of the floors and girders is to be the value according to the specifications of **i)** and **ii)** below, whichever is greater.

i) $t_1 = K \cdot \dfrac{PS\ell}{226(d_0 - d_1)} \times 10^3\ (mm)$

K: Material factor

P: Slamming impact pressure (kN/m^2) as specified in 4.8.2.2-2

d_0: Depth (mm) of the floor or girder at the position under consideration.

d_1: Depth (mm) of the floor or girder opening at the position under consideration.

ii) $t_2 = 8.6 \cdot \sqrt[3]{\frac{H^2 d_0^{\ 2}}{C'_2} t_1} \times 10^{-2}\ (mm)$

t_1: Thickness (mm) as specified in **i)** above.

d_0: As specified in **i)** above.

C'_2: Coefficient given by Table 10.6.2-1 depending on the ratio of the spacing (mm) of the stiffeners s_1 (mm) installed in the depth direction of the floor or girder and d_0. When the ratio s_1/d_0 is an intermediate value, linear interpolation is to be used.

H: Value according to the following formulae:

i) When an unreinforced slot is provided in a floor or girder

$$\sqrt{4.0\frac{d_1}{s_1} - 1.0}$$

The value of the above formula is to be taken as 1.0 when d_1/s_1 is not more than 0.5.

d_1: Depth (mm) of unreinforced slots located in upper and lower part of a floor, whichever is greater.

ii) When an unreinforced opening is provided in a floor or girder

$$1 + 0.5\frac{\phi}{d_0} \times 10^3$$

ϕ: Major axis of the opening (m)

iii) When an unreinforced slot and opening are provided in a floor or girder, the value H is to be the product of the values obtained by **i)** and **ii)** above.

iv) The value H is to be taken as 1.0 for cases other than **i)** to **iii)** above.

(b) The requirements of 10.6.3.5 are to be applied for the floors of the longitudinal framing system and the girders of the transverse framing system. In this case, the slamming impact pressure P are to be P_{SL4A} specified in 4.8.2.2-2.

(c) The calculation of the section modulus of bottom longitudinals and longitudinal shell stiffeners is to be as specified in 10.6.2.3-1. The slamming impact pressure P are to be P_{SL4C} specified in 4.8.2.2-2.

Fig. 10.6.2-1 Region where Girders are to be Installed Closely

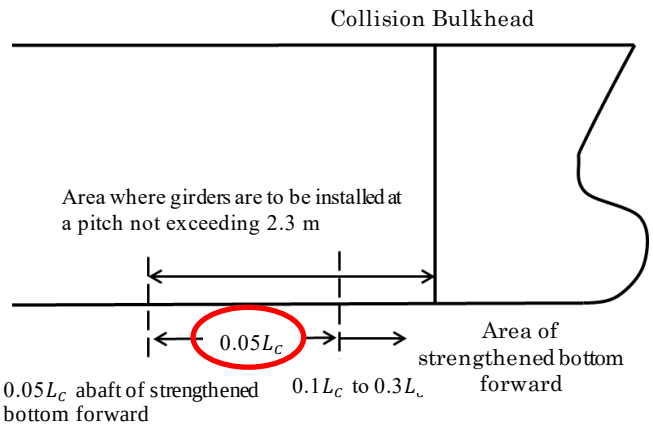

Table 10.6.2-1 Coefficient C'_2

$\frac{s_1}{d_0}$	0.3 or less	0.4	0.5	0.6	0.7	0.8	0.9	1.0	1.2	1.4 or grater
C'_2	64	38	25	19	15	12	10	9	8	7

10.6.2.3 Shell Longitudinals

1 In ships having a bow draught in the ballast condition of not more than $0.025L_{C230}$, the section modulus of the side longitudinal and bottom longitudinal in way of the strengthened bottom forward is to be not less than that given by the following formula.

$Z = 0.44KP\lambda\ell^2$ (cm^3)

K: Material factor

ℓ: Spacing (m) of floors

λ: 0.774ℓ. However, where the spacing of the longitudinals is not more than 0.774ℓ, the spacing (m) of that is to be used.

P: Slamming impact pressure (kN/m^2) as per the following:

Ships other than noted below: Bottom slamming pressure P_{SL1} (kN/m^2), as specified in **4.8.2.2**.

Ships having L_C of not less than 150 m and C_B of not less than 0.7: Bottom slamming pressure P_{SL3} (kN/m^2), as specified in **4.8.2.2**.

2 In ships having a bow draught in the ballast condition exceeding $0.025L_{C230}$ but less than $0.037L_{C230}$, the section modulus of the longitudinals in way of the strengthened bottom forward is to be obtained by linear interpolation from the values given by the requirements in **-1** and **6.4**.

10.6.2.4 Shell Plating

The thickness of shell plating at the strengthened bottom forward is to be as required in the following **(1)** to **(3)**. Where the ship has an unusually small draught in the ballast condition and has an especially high speed for the ship's length, special consideration is to be given to the thickness of the shell plating of the strengthened bottom forward.

(1) In ships having a bow draught in the ballast condition of not more than $0.025L_{C230}$, the thickness is not to be less than that obtained from the following formula:

$t_1 = CS\sqrt{KP}$ (mm)

C: Coefficient given in **Table 10.6.2-2**. For intermediate values of α between those in the table, C is to be obtained by linear interpolation.

S: Spacing (m) of frames or the spacing of girders or shell longitudinals, whichever is the smallest

α: Value (m) of the spacing of frames or the spacing of girders or shell longitudinals, whichever is greater, divided by S.

P: Slamming impact pressure (kN/m^2) as specified in **10.6.2.3-1**.

(2) In ships with a bow draught in the ballast condition of not less than $0.037L_{C230}$, the thickness is not to be less than the value required by external pressure specified in **6.3** or obtained from the following formula, whichever is greater.

$t_2 = 1.34S\sqrt{KL_C}$ (mm)

S: As specified in **(1)** above.

(3) In ships having an intermediate value between **(1)** and **(2)** above of the bow draught in the ballast condition, the thickness is to be obtained by linear interpolation.

Table 10.6.2-2 Value of C

α	1.0	1.2	1.4	1.6	1.8	2.0 or greater
C	1.04	1.17	1.24	1.29	1.32	1.33

10.6.3 Small, Slender High-Speed Ships (Ships having L_C of not more than 150 *m*, $V/\sqrt{L_C}$ of not less than 1.4, and C_B of not more than 0.7)

10.6.3.1 Application

For ships satisfying the following **(1)** to **(3)**, **10.6.3** is to be applied. However, for ships always which are expected to carry a certain amount of cargo, such as container ships **10.6.2** may be applied instead.

(1) Ships where Length L_C is not greater than 150 *m*

(2) $V/\sqrt{L_C}$ is not less than 1.4

(3) C_B is not greater than 0.7

10.6.3.2 Structural Arrangement

The structural arrangement is to be according to the following **(1)** to **(3)**. Where the structural arrangement of the strengthened bottom forward is other than this arrangement, the requirements of **10.6.2.2(2)** are to be satisfied.

(1) Between the collision bulkhead and $0.05L_C$ abaft the after end of the strengthened bottom forward, side girders are to be spaced not more than approximately 2.3 *m* apart. Where transverse framing is adopted, shell longitudinals are to be provided between the side girders, between the collision bulkhead and $0.025L_C$ abaft the after end of the strengthened bottom forward.

(2) Between the collision bulkhead and the after end of the strengthened bottom forward, solid floors are to be provided at every frame in the transverse framing system, or at least at alternate frames in the longitudinal framing system.

(3) The solid floors are to be reinforced by providing vertical stiffeners in way of shell longitudinals, and where the shell longitudinals are extended through the solid floors, slots are to be reinforced with collar plates.

10.6.3.3 Shell Longitudinals

1 In ships having a bow draught in the ballast condition of not more than $0.025L_{C230}$, the section modulus of the shell longitudinals in way of the strengthened bottom forward is not to be less than that given by the following formula.

$Z = 0.44KP\lambda\ell^2$ (cm^3)

K: Material factor

ℓ: Spacing (m) of floors

λ: According to the following formula. However, where the spacing of the longitudinal shell stiffeners is not more than 0.774ℓ, that spacing (m) is to be used.

$\lambda = 0.774\ell$

P: Slamming impact pressure (kN/m^2), which is P_{SL2A} as specified in **4.8.2.2**.

2 In ships having a bow draught in the ballast condition exceeding $0.025L_{C230}$ but less than $0.037L_{C230}$, the section modulus of the shell longitudinals in way of the strengthened bottom forward is to be according to the requirements of **-1** and **6.4** obtained by linear interpolation.

10.6.3.4 Shell Plating of Bottom Forward

The thickness of the shell plating of the strengthened bottom forward is to be determined in accordance with **10.6.2.4** using P_{SL2A} as specified in **4.8.2.2**.

10.6.3.5 Scantlings of Floors

The thickness of the floors in the strengthened bottom forward is to be the value determined in accordance with the following **(1)** and **(2)**, whichever is greater.

(1) Value obtained by the following formula:

$$t_1 = \frac{1.2KPSb_1}{\sigma_Y(b_1 - d_1)} \ (mm)$$

P: Slamming impact pressure (kN/m^2), which is P_{SL2B} as specified in **4.8.2.2**.

S: Spacing (m) of floors

b_1: Width (mm) of floor panel having a width equal to half of the spacing of the bottom longitudinals on each side of the centreline of a bottom longitudinal. (*See* **Fig. 10.6.3-1**)

d_1: Width (mm) of an opening such as a lightening hole, slot, etc. ($d_1 = d_2 + d_3$) of the floor at the depth under consideration. When a doubling plate is applied to the opening, the cross-sectional area of the doubling plate may be taken into account.

(2) Value obtained by the following formula:

$t_2 = 1.1 \cdot \sqrt[3]{PSb_2{}^2} \times 10^{-2}$ (mm)

P, S: As specified in **(1)** above.

b_2: Spacing (mm) of bottom longitudinals (*See* **Fig. 10.6.3-1**)

Fig. 10.6.3-1 Floor

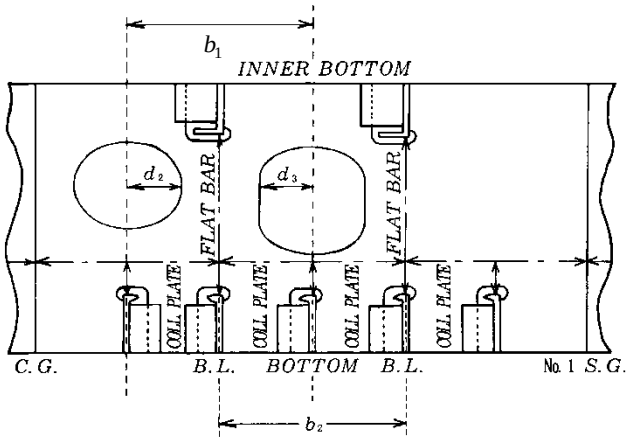

10.7 Structural Strength against Bow Impact Pressure

10.7.1 High-Speed Ships with Large Bow Flare

10.7.1.1 Application

1 For ships with large bow flares that operate at high speed (car carriers, ro-ro ships, LNG carriers or refrigerated LPG carriers, etc.), the requirements of this **10.7.1** are to be applied to the structure of the bow flare region located above the load line and forward of $0.2L_C$ from the bow, which is considered to endure large wave impact pressure.

2 The required scantlings specified in this **10.7.1** are to be gross scantlings.

10.7.1.2 General

1 The stiffness of stiffeners, girder supporting stiffeners and members supporting such girder is to be increased, and attention is to be paid to their end connections.

2 In the shell plating in locations which are considered to endure large wave impact pressure, adequate consideration is to be given to strengthening against wave impact on the bow.

3 For high-speed ships with large bow flare, adequate consideration is to be given to the buckling strength of the deck.

10.7.1.3 Shell Plating

The thickness of the shell plating is not to less than that obtained by the following formula:

$$t_{gr} = s\sqrt{\frac{\psi P_{FB1}}{\sigma_Y} \times 10^{-3}} \ (mm)$$

s: Spacing (mm) of stiffeners measured along the shell plating

σ_Y: Specified minimum yield stress (N/mm^2)

ψ: Value obtained by the following formula:

$$\psi = \frac{3\eta^2 - 2\sqrt{1+3\eta^2} + 2}{12\eta^2}$$

η: Spacing (m) of girders measured along the shell plating divided by s.

P_{FB1}: Impact pressure (kN/m^2) by slamming as specified in **4.8.2.3**.

10.7.1.4 Stiffeners

The thickness of the web t_{w-gr} (gross scantlings) and plastic section modulus Z_{P-gr} (gross scantlings) of the frame and side longitudinals are not to be less than the values obtained by the following formulae.

(1) Required web thickness (gross scantlings)

$$t_{w-gr} = \frac{648 P_{FB1} s \ell_s}{h_0 \sigma_Y \cos\theta_s} \times 10^{-3} \ (mm)$$

(2) Required plastic section module (gross scantlings)

$$Z_{P-gr} \geq \frac{P_{FB1} s \ell_s{}^2}{16 \sigma_Y \cos\theta_s} \ (cm^3)$$

s: Spacing (mm) of stiffeners measured along the shell plating (*See* **Fig. 10.7.1-2**)

ℓ_s: Distance (m) between the supporting points of stiffeners obtained by the following formula:

$$\ell_s = \ell - \ell_{b1} - \ell_{b2}$$

ℓ: Unsupported length (m) of the stiffener measured along the shell plating (*See* **Fig. 10.7.1-1**)

ℓ_{b1} and ℓ_{b2}: Bracket length (m) for span correction as obtained from the following formulae

$$\ell_{b1} = b_1 \left(1 - \frac{h_0}{h_1}\right) \times 10^{-3}$$

$$\ell_{b2} = b_2 \left(1 - \frac{h_0}{h_2}\right) \times 10^{-3}$$

b_1, b_2, h_0, h_1 and h_2 (mm): *See* **Fig. 10.7.1-1**

σ_Y: Specified minimum yield stress (N/mm^2)

θ_s: List angle (deg) of the stiffener relative to the shell plating (*See* **Fig. 10.7.1-2**)

P_{FB1}: Slamming impact pressure (kN/m^2) as specified in **4.8.2.3**.

Z_{P-gr}: Plastic section modulus (cm^3) (gross scantlings) when the stiffeners are provided normal to the shell plating, as obtained by the following formula:

$$Z_{P-gr} = 0.1 A_{f-gr} h_0 + \frac{1}{2000} h_0{}^2 t_{w-gr}$$

A_{f-gr}: Sectional area (cm^2) of the flange (gross scantlings)

h_0: Web depth (mm)

t_{w-gr}: Web thickness (mm) (gross scantlings)

Fig. 10.7.1-1 Corrected Span Length of Stiffener

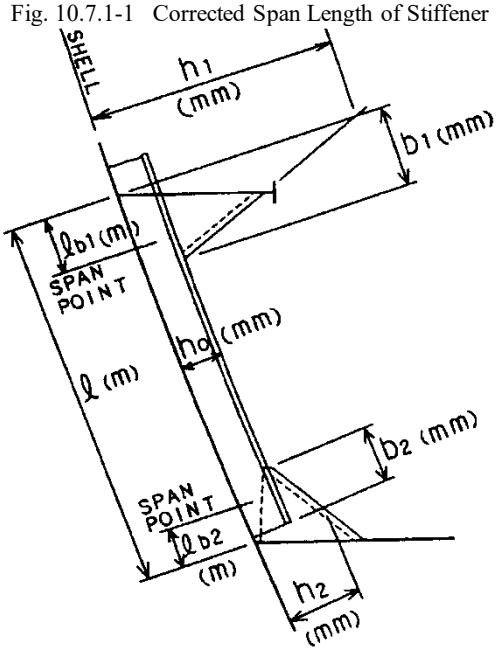

Fig. 10.7.1-2

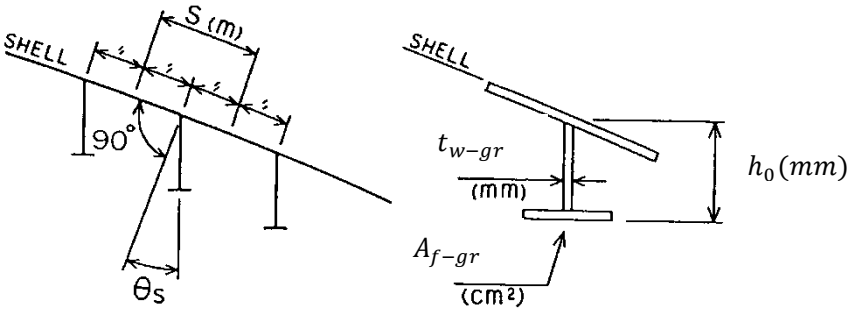

10.7.1.5 Side Stringers and Web Frames

1 The thickness t_{wG-gr} (gross scantlings) and section modulus Z_{G-gr} (gross scantlings) of stringers and side stringer are not to be less than the values obtained by the following formulae:

(1) Required thickness of web plate

$$t_{wG-gr} = \frac{433 P_{FB1} S_G \ell_G}{d_{wG} \sigma_Y \cos\theta_G} \ (mm)$$

(2) Required section modulus

$$Z_{G-gr} \geq \frac{P_{FB1} S_G \ell_G{}^2}{24 \sigma_Y \cos\theta_G} \times 10^3 \ (cm^3)$$

P_{FB1}: Bow impact pressure (kN/m^2) as specified in **4.8.2.3**.

S_G: Spacing (m) of girders (m) measured along the shell plating. (*See* **Fig. 10.7.1-4**)

ℓ_G: Unsupported length (m) of girder (m) taking into account the geometry of the girder at the end parts. When the end is an arc shape, as shown in **Fig. 10.7.1-3**, the span is to be corrected as follows assuming triangular brackets.

(1) Connect the points R-END (A) and R-END (B)

(2) Draw a line parallel to AB and tangent to the arc $A'B'$

(3) Determine A'' and B'' so that $AA'' = (2/3)AA'$ *and* $BB'' = (2/3)BB'$ and regard the triangle $OA''B''$ as the equivalent bracket. The following formula is to be used:

$$\ell_G = \ell - \ell_{b1} - \ell_{b2}$$

ℓ: Length (m) of the girders measured along the shell plating (*See* **Fig. 10.7.1-3**)

ℓ_{b1} and ℓ_{b2}: Bracket length (m) for span correction as obtained by the following formulae:

$$\ell_{b1} = b_1\left(1 - \frac{d_{wG}}{h_1}\right) \times 10^{-3}$$

$$\ell_{b2} = b_2\left(1 - \frac{d_{wG}}{h_2}\right) \times 10^{-3}$$

b_1, b_2, h_0, h_1 and h_2: *See* **Fig. 10.7.1-3**

d_{wG}: Web depth (mm)

σ_Y: Specified minimum yield stress (N/mm^2)

θ_G: List angle (deg) of the shell plating of the girder from the vertical axis (*See* **Fig. 10.7.1-4**)

Z_{G-gr}: ection modulus of the girder (cm^3) according to the following formula:

$$Z_{G-gr} = 0.1 A_{fG-gr} d_{wG} + \frac{1}{3000} d_{wG}{}^2 t_{wG-gr}$$

A_{fG-gr}: Sectional area (cm^2) of the flange (gross scantlings)

t_{wG-gr}: Web thickness (mm) of the girder member (gross scantlings)

2 The buckling strength of the web of the girders supporting the stiffener in **-1** above is to satisfy the following requirements. The following formulae are to be satisfied so that the compressive stress acting on the web σ_a is not more than the permissible buckling stress $\sigma_{acr}{}^*$.

When $\sigma_{acr} \leq \frac{\sigma_Y}{2}$, $\sigma_{acr}{}^* = \sigma_{acr}$ (N/mm^2)

When $\sigma_{acr} > \frac{\sigma_Y}{2}$, $\sigma_{acr}{}^* = \sigma_Y\left(1 - \frac{\sigma_Y}{4\sigma_{acr}}\right)$ (N/mm^2)

σ_Y: According to **-1** above.

σ_{acr}: Reference buckling stress of the web obtained by the following formula:

$3.6E\left(\frac{t_{wG-gr}}{s}\right)^2$ (N/mm^2)

t_{wG-gr}: As specified in **-1** above.

s: Spacing (mm) of side longitudinals or web stiffeners connected to frames

σ_a: Compressive stress acting on the web obtained by the following formula:

$\frac{0.5P_{FB1}S_G}{t_{wG-gr}\cos\theta_G}$ (N/mm^2)

P_{FB1},S_G and θ_G: According to **-1** above.

3 The buckling strength of the web at the end of the girder member in **-1** above is to satisfy the following **(1)** and **(2)**.

(1) The following formulae are to be satisfied so that the shear stress acting on the web τ is not more than the permissible shear stress $\tau_{cr}{}^*$.

When $\tau_{cr} \le \frac{\tau_Y}{2}, \tau_{cr}{}^* = \tau_{cr}$ (N/mm^2)

When $\tau_{cr} > \frac{\tau_Y}{2}, \tau_{cr}{}^* = \tau_Y\left(1-\frac{\tau_Y}{4\tau_{cr}}\right)$ (N/mm^2)

τ_Y: $\frac{\sigma_Y}{\sqrt{3}}$

σ_Y: According to **-1** above.

τ_{cr}: Shear buckling stress of the web obtained by the following formula:

$0.9k_sE\left(\frac{t_{wG-gr}{}^*}{d_{wG}{}^*}\right)^2$ (N/mm^2)

k_s: Coefficient determined by $a_G/d_{wG}{}^*$ as specified in **Table 10.7.1-1**, to be obtained by linear interpolation when $a_G/d_{wG}{}^*$ is an intermediate value.

a_G: Length (mm) of the panel at the end of the web

$t_{wG-gr}{}^*$: Web thickness (mm) at the end of the girder (gross scantlings)

$d_{wG}{}^*$: Average web depth (mm) at the end of the girder

τ: Shear stress acting on the web obtained by the following formula:

$\frac{250P_{FB1}S_G\ell}{d_{wG}{}^*t_{wG}{}^*\cos\theta_G}$ (N/mm^2)

P_{FB1}, S_G, ℓ and θ_G: According to **-1** above

(2) The following formulae are to be satisfied so that the bending stress acting on the web σ_b is not more than the permissible bending stress $\sigma_{bcr}{}^*$.

When $\sigma_{bcr} \le \frac{\sigma_Y}{2}, \sigma_{bcr}{}^* = \sigma_{bcr}$ (N/mm^2)

When $\sigma_{bcr} > \frac{\sigma_Y}{2}, \sigma_{bcr}{}^* = \sigma_Y\left(1-\frac{\sigma_Y}{4\sigma_{bcr}}\right)$ (N/mm^2)

σ_Y: According to **-1** above.

σ_{bcr}:Bending buckling stress of the web obtained by the following formula:

$0.9k_bE\left(\frac{t_{wG-gr}{}^*}{d_{wG}{}^*}\right)^2$ (N/mm^2)

k_b: Coefficient determined by $a_G/d_{wG}{}^*$ as specified in **Table 10.7.1-2**, to be obtained by linear interpolation when $a_G/d_{wG}{}^*$ is an intermediate value

$t_{wG}{}^*$, a_G and $d_{wG}{}^*$: According to **(1)** above.

σ_b: Bending stress acting on the web obtained by the following formula:

$\frac{P_{FB1}S_G\ell_G{}^2}{24Z_{G-gr}{}^*\cos\theta_G}\times 10^3$ (N/mm^2)

P_{FB1}, S_G, ℓ_G and θ_G: According to **-1** above.

$Z_{G-gr}{}^*$: Section modulus (cm^3) of the girder end obtained by the following formula (gross scantlings)

$Z_{G-gr}{}^* = 0.1A_{fG-gr}d_{wG}{}^* + \frac{1}{3000}d_{wG}{}^{*2}t_{wG-gr}{}^*$

A_{fG-gr}: According to **-1** above.

Table 10.7.1-1 Coefficient k_s

$a_G/d_{wG}{}^*$	0.3 or less	0.4	0.5	0.6	0.7	0.8	0.9	1.0	1.2	1.4 or larger
k_s	64	38	25	19	15	12	10	9	8	7

Table 10.7.1-2 Coefficient k_b

$a_G/d_{wG}{}^*$	0.5 or less	0.6	0.7	0.8	0.9 or larger
k_b	12	10	8.8	8.0	7.8

Fig. 10.7.1-3

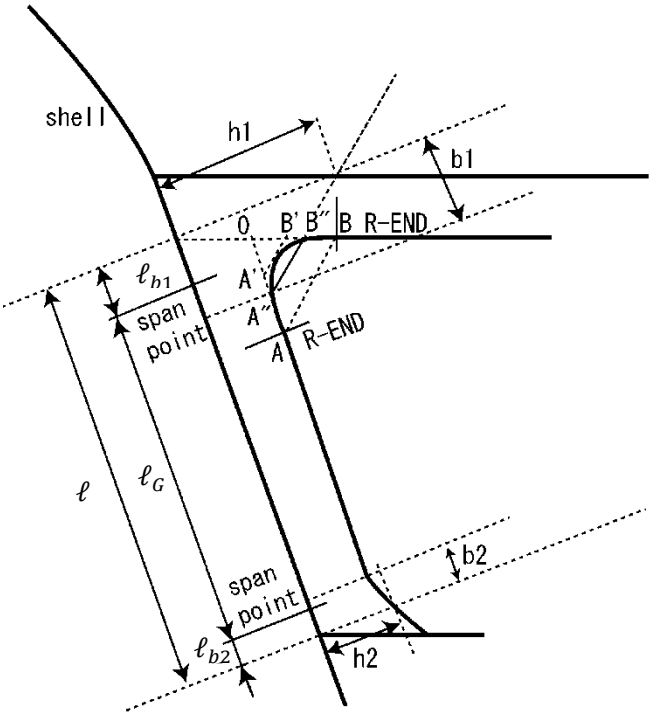

Fig. 10.7.1-4

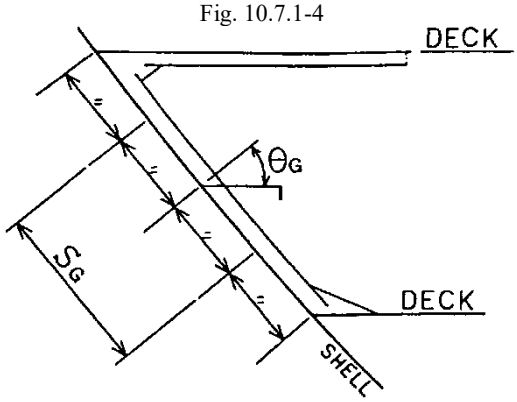

Fig. 10.7.1-5

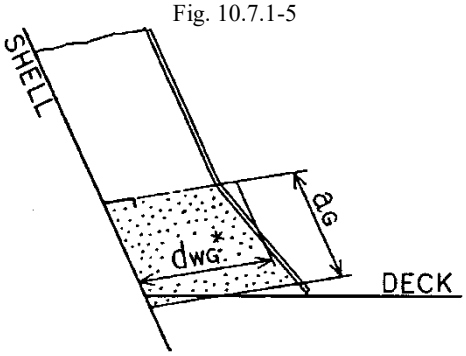

10.7.2 Blunt Ships

10.7.2.1 Application

1 For ships with a length of not less than 250 m and C_B of not less than 0.8, the requirements of this **10.7.2** are to be applied.

2 The side structure in the ship forward area is to be strengthened against bow impact pressures. The strengthening is to extend forward of $0.1L_C$ from the FP and vertically above the minimum design ballast draught, T_{BAL}, defined in **1.4.3.1-5(2)** and forecastle if any. (*See* **Fig. 10.7.2-1**)

3 The required scantlings specified in this **10.7.2** are to be net scantlings.

Fig. 10.7.2-1 Area of Strengthening against Bow Impact Pressure

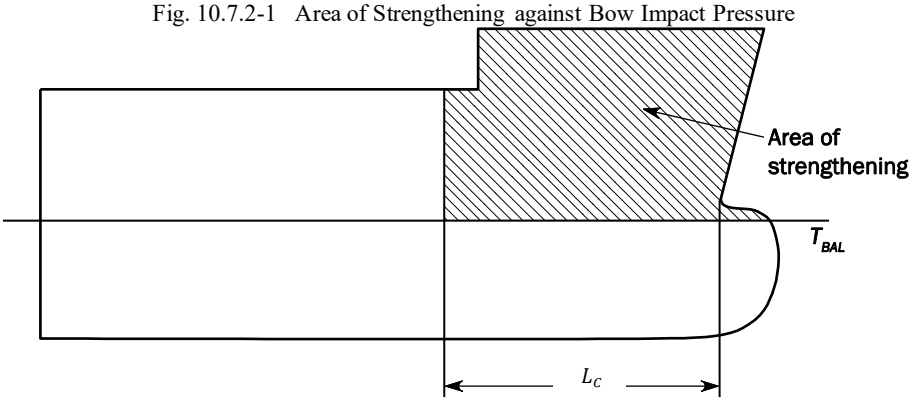

4 Outside the strengthening area the scantlings are to be tapered to maintain continuity of longitudinal and/or transverse strength.

10.7.2.2 Design for Bow Impact

1 In the bow impact strengthening area, longitudinal framing is to be carried as far forward as practicable. The design of end connections of stiffeners in the bow impact region are to ensure end fixity, either by making the stiffeners continuous through supports or by providing end brackets complying with **3.4.2.3**. Where it is not practical to comply with this requirement, the net plastic section modulus, Z_{pl-alt} (cm^3), for alternative end fixity arrangements is not to be less than:

$$Z_{pl-alt} = \frac{16Z_{pl}}{f_{bdg}}$$

Z_{pl}: Effective net plastic section modulus (cm^3) as specified in **10.7.2.4**.

f_{bdg}: Bending moment factor taken as:

$$f_{bdg} = 8\left(1 + \frac{n_s}{2}\right)$$

n_s: End fixation factor taken as:

$n_s = 0$ for both ends with low end fixity (simply supported).

$n_s = 1$ for one end fixed and one end simply supported.

$n_s = 2$ for continuous members or members with bracketed fitted at both ends

2 Scantlings and arrangements of primary supporting members, including decks and bulkheads, in way of the stiffeners, are to comply with **10.7.2.6**. In areas of the greatest bow impact load, the web stiffeners arranged perpendicular to the hull envelope plating and the double sided lug connections are to be provided. The main stiffening direction of decks and bulkheads supporting shell framing is to be arranged parallel to the span direction of the supported shell frames, to protect against buckling.

10.7.2.3 Side Shell Plates

The thickness (mm) of the side shell plating, t is not to be less than that obtained by the following formula:

$$t = 0.0158\alpha_p b\sqrt{\frac{P_{FB2}}{C_a\sigma_Y}}$$

α_p: Correction coefficient according to the aspect ratio of the plate, as obtained by the following formula. However, this value is not to exceed 1.0.

$$\alpha_p = 1.2 - \frac{b}{2.1a}$$

a: Length (mm) of the plate panel

b: Width (mm) of the plate panel

C_a: Coefficient of permissible bending stress, to be taken as 1.0.

P_{FB2}: Bow impact pressure (kN/m^2) as specified in **4.8.2.3-2**.

10.7.2.4 Side Longitudinals

The side longitudinals within the strengthening area defined in **10.7.2.1** are to comply with the following criteria:

(1) The effective net plastic section modulus, Z_{pl} (cm^3) in association with the effective plating to which it is attached, is not to be less than:

$$Z_{pl} = \frac{P_{FB2}s\ell_{bdg}{}^2}{f_{bdg}C_s\sigma_Y}$$

ℓ_{bdg}: Effective bending span (m) as specified in **3.6.1**.

f_{bdg}: As specified in **10.7.2.2-1**.

n_s: As specified in **10.7.2.2-1**.

C_s: Coefficient of permissible bending stress, to be taken as 0.9.

Z_{pl}: Plastic section modulus calculated according to **1.4.6, Section 7, Chapter 3, Part 1, Part CSR-B&T**.

(2) The web thickness t_w (mm) is not to be less than that obtained by the following formula:

$$t_w = \frac{P_{FB2}s\ell_{shr}}{2d_{shr}C_t\tau_Y}$$

ℓ_{shr}:Effective shear span (m) as specified in **3.6.1**.

d_{shr}: Effective web depth (mm) of the stiffener as specified in **3.6.4.2**.

C_t: Coefficient of permissible shear stress, to be taken as 1.0.

(3) The slenderness ratio is to be as specified in **3.5.2**.

10.7.2.5 Bow Impact Load Area for Primary Supporting Members

The scantlings of primary supporting members according to **10.7.2.6** are based on the application of the bow impact pressure, as defined in **4.8.2.3-2**, to an idealised bow impact load area of hull envelope plating, A_{BI} (m^2), is given by:

$$A_{BI} = \frac{1.1L_CBC_B}{1000}$$

10.7.2.6 Primary Supporting Members

1 The section modulus of the primary supporting member is to apply along the bending span clear of end brackets and cross sectional areas of the primary supporting member are to be applied at the ends/supports and may be gradually reduced along the span and clear of the ends/supports following the distribution of f_{dist} indicated in **Fig. 10.7.2-2**.

Fig. 10.7.2-2 Value of Coefficient f_{dist} along Span of a Primary Supporting Member

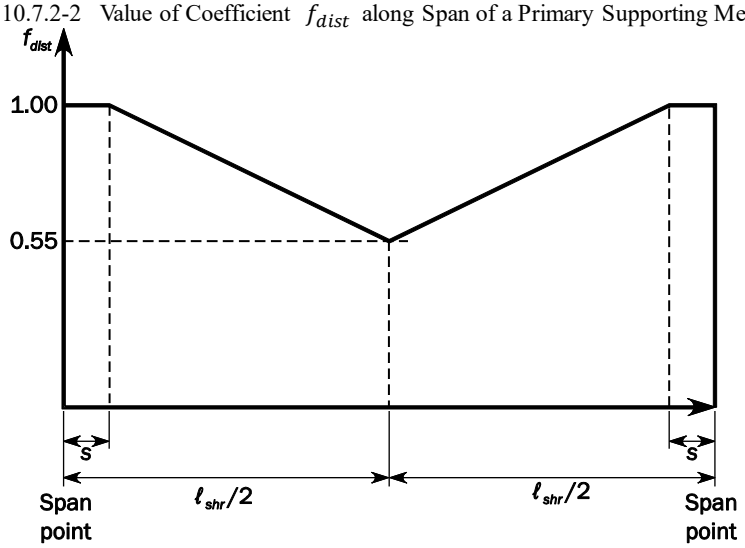

2 Primary supporting members in the bow impact strengthening area are to be configured to provide effective continuity of strength and the avoidance of hard spots.

3 End brackets of primary supporting members are to be suitably stiffened along their edge. Consideration is to be given to the design of bracket toes to minimise abrupt changes of cross section.

4 Tripping arrangements are to comply with **3.5.2.5**. In addition, tripping brackets are to be fitted at the toes of end brackets and at locations where the primary supporting member flange is knuckled or curved.

5 The section modulus Z (cm^3) of primary supporting members is not to be less than that given by the following formula:

$$Z = 1000\frac{f_{bdg-pt}P_{FB2}b_{BI}f_{BI}\ell_{bdg}^{\ 2}}{f_{bdg}C_S\sigma_Y}$$

f_{bdg-pt}: Correction factor for the bending moment at the ends and considering the patch load taken as:

$$f_{bdg-pt} = 3f_{BI}^{\ 3} - 8f_{BI}^{\ 2} + 6f_{BI}$$

f_{BI}: Patch load modification factor taken as:

$$f_{BI} = \frac{\ell_{BI}}{\ell_{bdg}}$$

ℓ_{BI}: Extent of bow impact load area (m), along the span:

$\ell_{BI} = \sqrt{A_{BI}}$, but not to exceed ℓ_{bdg}.

b_{BI}: Breadth of impact load area, in m, supported by the primary supporting member, to be taken as the spacing between primary supporting members, S, as defined in **1.4.2.5**, but not to be taken as greater than ℓ_{BI}.

A_{BI}: Bow impact load area (m^2) as specified in **10.7.2.5**.

f_{bdg}: Coefficient for bending moment, as follows:

f_{bdg} = 12 for primary supporting members with end fixed continuous flange or where brackets at both ends are fitted in accordance with **3.4.3.2**.

C_s: Coefficient for permissible bending stress, to be taken as 0.8.

6 The shear area A_{shr} (cm^2) of the web of a primary supporting member at the supporting point or at the edge of the end bracket is not to be less than that obtained by the following formula:

$$A_{shr} = \frac{5f_{PL}P_{FB2}b_{BI}\ell_{shr}}{C_t\tau_Y}$$

f_{PL}: Patch load modification factor taken as:

$$f_{PL} = \frac{\ell_{BI}}{\ell_{shr}}$$

ℓ_{BI}: Extent of bow impact load area, (m), along the span taken as,

$\ell_{BI} = \sqrt{A_{BI}}$, but not to exceed ℓ_{shr}.

C_t: Coefficient for permissible shear stress, to be taken as 0.75.

b_{BI}: As specified in **-5** above.

7 The web thickness t_w (mm) of the primary supporting member that includes the deck and bulkhead in way of side shell is not to be less than that obtained by the following formula:

$$t_w = \frac{P_{FB2} b_{BI}}{\sin\varphi_W \sigma_{cr}}$$

φ_W: Angle (deg) between the web and shell plating of the primary supporting member (*See* **Fig. 10.7.2-3**)

σ_{cr}: Critical buckling stress (N/mm^2) of the web of the primary supporting member or deck or bulkhead panel obtained by the following formulae:

When $h_w \geq b_w$

$$\sigma_{cr} = \min\left(\left(\frac{2.25}{\beta} - \frac{1.25}{\beta^2}\right)\sigma_Y, \sigma_Y\right)$$

$$\beta = \frac{b_w}{t_w}\sqrt{\frac{\sigma_Y}{E}}$$

When $h_w < b_w$

$$\sigma_{cr} = \min\left(\left[\frac{h_w}{b_w}\left(\frac{2.25}{\beta} - \frac{1.25}{\beta^2}\right) + \left(1 - \frac{h_w}{b_w}\right)\left(\frac{0.06}{\beta} + \frac{0.6}{\beta^2}\right)\right]\sigma_Y, \sigma_Y\right)$$

$$\beta = \frac{h_w}{t_w}\sqrt{\frac{\sigma_Y}{E}}$$

h_w: Web depth (mm) of the primary supporting member

b_w: Spacing (mm) of the web stiffeners of the primary supporting member

σ_Y: Specified minimum yield stress (N/mm^2) of the web of the primary supporting member

Fig. 10.7.2-3 Angle between Primary Supporting Member with Shell Plating and the Shell Plating

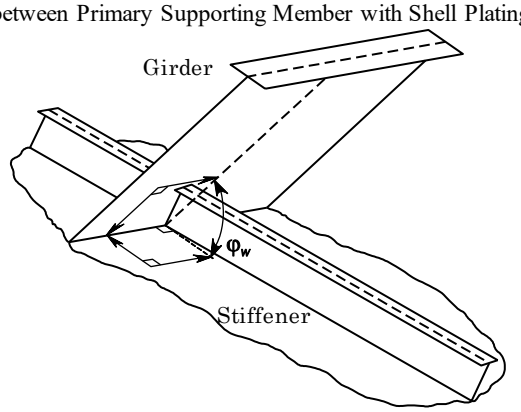

10.8 Connections of Ends of Girders and Stiffeners

10.8.1 General

10.8.1.1

1 Where stiffeners support the longitudinals penetrating floors or transverse girders in tanks, the connection of the stiffeners to the longitudinals is to have enough fatigue strength for the dynamic pressure that occurs in the tanks. The scantling of the stiffeners is to be not less than that specified in **(1)** and **(2)** below.

(1) Thickness is not to be less than the minimum thickness applicable to the transverse girder or floor where the stiffeners are attached.

(2) The depth of the stiffener b_S is to be according to the following:

$$b_s \geq 0.08(d_0 - d_l)$$

Where:

d_0: Depth (mm) of the transverse girder or floor.

d_l: Depth (mm) of the height of the londitudinals which penetrates transverse girder or floor

2 "To have enough fatigue strength" for the connections of stiffeners to longitudinals which penetrate transverse girders or floors

in double bottom tanks or deep tanks among the connections specified in **-1** above refer to satisfy the following formula:

$\sigma_s \leq 175$

σ_s: Stress (N/mm^2) in the end of the stiffener under consideration, as obtained by the following formula:

$$\sigma_s = C_{ship} K_{con} K_{longi} K_{stiff} \frac{\Delta\sigma_a}{\cos\theta}$$

C_{ship}: Coefficient as given in **Table 10.8.1-1**

K_{con}: Coefficient considering stress concentration, as obtained from **Table 10.8.1-2**

K_{longi}: Coefficient considering the shape of the cross section of the longitudinal, as obtained from **Table 10.8.1-3**

K_{stiff}: Coefficient considering the shape of the end of the stiffener, as obtained from **Table 10.8.1-4**

θ: Installation angle (*deg*) between the longitudinal and stiffener (*See* **Fig. 10.8.1-1**)

$\Delta\sigma_a$: Stress (N/mm^2) transferred from longitudinals into the end of the stiffener, as obtained from the following formula:

$$\Delta\sigma_a = \frac{\Delta W}{0.322h'\left[(A_{w1_n25}/\ell_1) + (A_{w2_n25}/\ell_2)\right] + A_{s0_n25}}$$

ΔW: Dynamic load as obtained from the following formula:

$$\Delta W = (\ell - 0.5s \times 10^{-3}) s \Delta P C_L \ (N)$$

ℓ: Spacing (m) of transverse girders

s: Spacing (mm) of longitudinals

C_L: Coefficient depending on the position of the centre of gravity of the tank in the longitudinal direction, as obtained from **Table 10.8.1-5**.

ΔP: As obtained from the following formula:

$\Delta P = 2\rho_L a_v (z_{top} - z)$ (kN/m^2), but not less than $2\rho g \Delta h$.

ρ_L: Density of the liquid in the tank under consideration (t/m^3)

a_v: Vertical acceleration (m/s^2)

$$a_v = \frac{10.5\sqrt{V+5}}{L_C\sqrt{C_B}} g$$

z_{top}: Z-coordinate (m) of the highest point of the tank excluding small hatchways

z: Z-coordinate (m) of connection point of the longitudinal to which the stiffener under consideration is installed

$$\Delta h = \frac{16}{L_C}(\ell_t - 10) + 0.25(b_t - 10) \ (m)$$

ℓ_t: Tank length (m), but not to be less than 10 m.

b_t: Tank breadth (m), but not to be less than 10 m. Tank breadth may be $2B/3$ for the ballast hold of bulk carrier equipped with topside tanks.

$A_{s0-n25}, A_{w1-n25}, A_{w2-n25}, \ell_1$ *and* ℓ_2: Geometry parameters as given in **Fig. 10.8.1-3**.

h': As obtained from the following formula:

$$h' = h_s + h'_0 \ (mm)$$

h_s: Length (mm) of the part not joined to the girder at the end of the stiffener (*See* **Fig. 10.8.1-3**)

h'_0: As obtained from the following formula (mm):

When $b' \leq 150$ $h'_0 = 0.636b'$

When $150 < b'$ $h'_0 = 0.216b' + 63$

b': Breadth (mm) of the end of the stiffener (*See* **Fig. 10.8.1-3**)

3 Notwithstanding the requirements in **-2** above, the scantlings of the stiffeners may be determined by other procedures provided that documents on such analysis procedures and results of calculation are to be submitted to the Society for approval.

Table 10.8.1-1 Coefficient C_{ship}

Length of ship L_C (m)	and over	90	150	200
	less than	150	200	
C_{ship}		$0.55 + \frac{L_C}{600}$	0.80	1.00

Table 10.8.1-2 Coefficient K_{con}

	Where the stiffeners are provided on floors or transverse girders of which both sides are supported by parallel plates (e.g. double bottoms or double sides) (*See* **Fig. 10.8.1-1**)	Where the stiffeners are provided on transverse girders of which one side is supported by one plate (e.g. bilge hopper tank) (*See* **Fig. 10.8.1-1**)
K_{con}	3.5	4.0

Fig. 10.8.1-1 Examples of Stiffeners Fitted on Floor and Girder

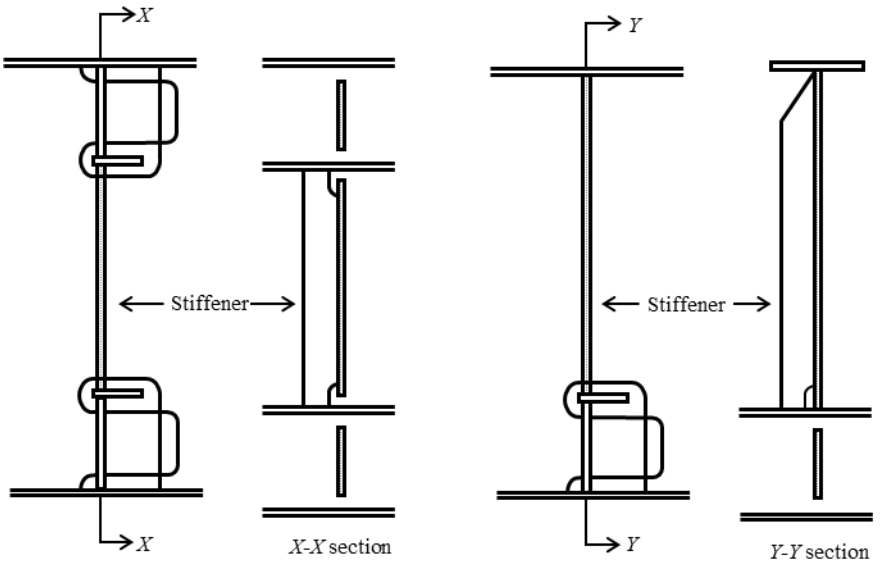

In case where stiffeners are provided on floors or transverse girders of which both sides are supported by parallel plates (e.g. double bottoms or double sides)

In case where stiffeners are provided on transverse girders of which one side is supported by one plate (e.g. bilge hopper tank)

Table 10.8.1-3 Coefficient K_{longi}

	T-sections, flat bars and bulb plates	L-sections and inverted angles
K_{longi}	1.0	1.3(1)

(Note)

(1): Where the longitudinals of L-sections or inverted angles are supported by brackets between one floor or one transverse girder and another, K_{longi} may be taken as 1.0.

Table 10.8.1-4 Coefficient K_{stiff}

	Standard shape of end of stiffener (**Fig. 10.8.1-2**)	Shape of end of stiffener considering fatigue strength in comparison with standard shape (**Fig. 10.8.1-2**)
K_{stiff}	1.0	0.8

Fig. 10.8.1-2 Examples of Shapes of the Ends of Stiffeners

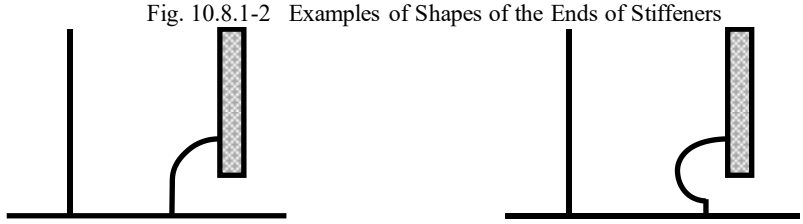

Standard shape of the end of the stiffener

Shape of the end of the stiffener considering fatigue strength in comparison with the standard shape

Table 10.8.1-5 Coefficient C_L

Position of volumetric centre of gravity of tank in longitudinal direction	$x \leq 0.7L_C$	$0.7L_C < x$
C_L	1.0	1.1

Fig. 10.8.1-3 Definitions of Geometry Parameters Near Slot for Longitudinals

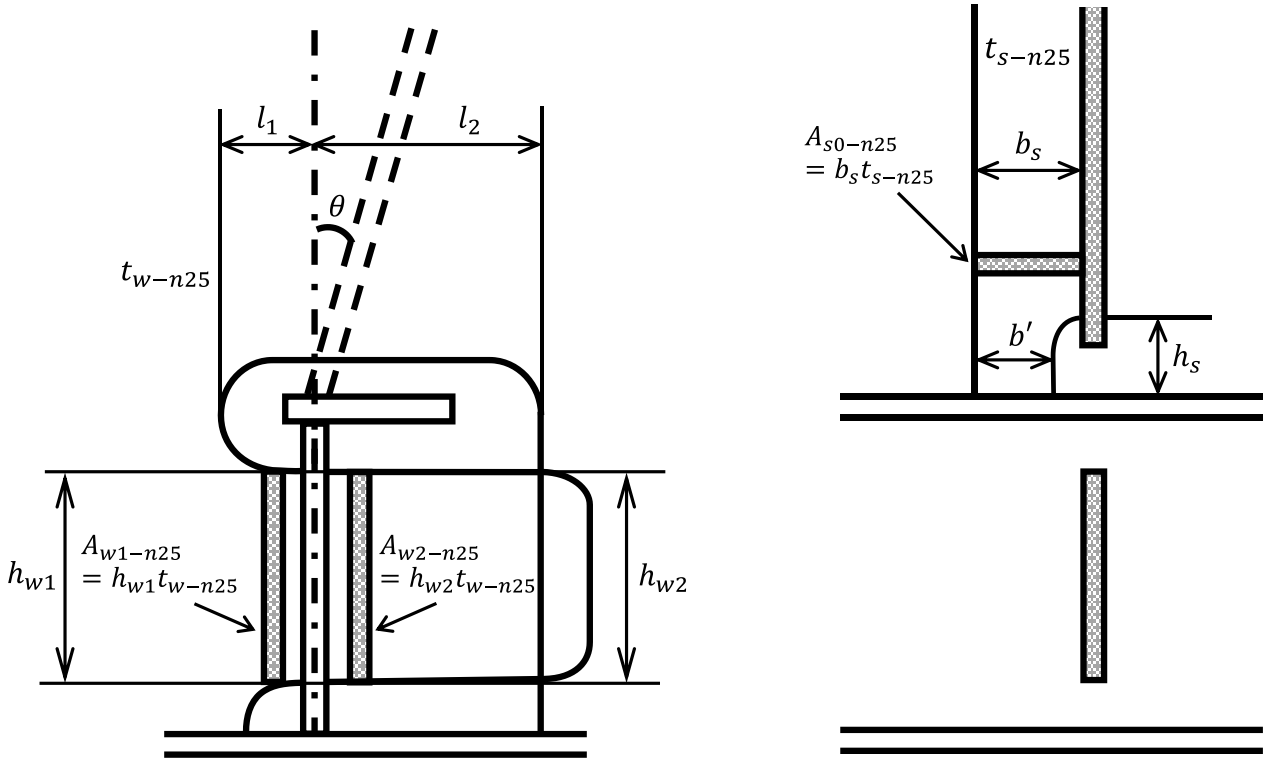

10.9 Tank Structures for Sloshing

10.9.1 General

10.9.1.1 Application*

1 For the members of liquid cargo tank structures which satisfy the following **(1)** to **(3)**, the scantlings specified in this **10.9** are considered to be satisfied when obtained using the sloshing loads specified in **4.8.2.4**.

(1) Cargo tanks with volumes of not less than 100 m^3

(2) Cargo tanks designed for possible to loading at filling ratios of not less than 20 % and not more than 90 %

(3) Where the period of longitudinal oscillation of cargo tanks is within the range of ±20 % of pitch period and within ±1.5 *seconds* from the same period, and where the period of transverse oscillation of cargo tanks is within the range of ±20 % of roll period and within ±1.5 *seconds* from the same period.

2 In applying **-1(3)** above, where only one of the conditions is applicable, only the sloshing load due to the relevant ship motion need be considered.

3 In applying **-1(3)** above, tank natural periods are to be calculated for each 10 % of the filling ratio, and only the sloshing load due to the filling ratio corresponding to the conditions of **-1(3)** above need be considered.

4 Notwithstanding **-1** above, the application of this **10.9** may be required for any tank structure deemed necessary by the Society.

5 Notwithstanding this **10.9**, advanced methods such as numerical calculations may be required in order to determine scantling where deemed appropriate by the Society.

10.9.1.2 Scantling Approach

The required scantlings specified in this **10.9** are to be net scantlings.

10.9.1.3 Members to be Assessed and Loads to be Applied

This **10.9** specifies the yield strength assessment of plates on which sloshing loads act (including plate panels constituting the webs of girders), and the stiffeners attached to them. Strength assessments for their members are to be performed considering the lateral loads and hull girder loads specified in **Table 10.9.1-1**.

Table 10.9.1-1 Loads for Each Member to be Assessed

Compartment to be assessed	Member	Load				Application
		Lateral load	Load type	Refer to the following		
				Lateral load (P_{slh}, M_{slh})	Hull girder load (M_{V-HG})	
Cargo tank	Plates	Internal pressure	Liquid loaded	**4.8.2.4-4**	**4.8.2.4-7**	**10.9.2.1**
	Stiffener			**4.8.2.4-5**		**10.9.3.1**
	Webs of girders			**4.8.2.4-4**		**10.9.4.1**
	Corrugated bulkheads			**4.8.2.4-6**	-	**10.9.2.1**
						10.9.5.1

10.9.1.4 Stress Due to Hull Girder Load

The stress σ_{BM} (N/mm^2) due to hull girder load at plates and stiffeners to be assessed is to be in accordance with the following formula.

$$\sigma_{BM} = \left| \frac{M_{V-HG}}{I_{y-n50}} (z - z_n) \right| \times 10^5$$

M_{V-HG}: Hull girder load (vertical bending moment) specified in **Table 10.9.1-1**($kN\text{-}m$)

I_{y-n50}: Moment of inertia (cm^4) of the hull transverse section under consideration about its horizontal neutral axis. Corrosion additions considered in the calculation are to be as specified in **3.3.4**.

z: Z coordinate (m) at the load calculation point for the member under consideration. The coordinate systems and the load

calculation points are as specified in 1.4.3.6, 3.7.1 and 3.7.2 respectively.

z_n: Vertical distance (m) from the top of the keel in the transverse section under consideration to the horizontal neutral axis

10.9.2 Plates

10.9.2.1

The thickness of plates on which sloshing loads act is to be not less than the value obtained from the following formula.

$$t = \frac{b}{2}\sqrt{\frac{P_{slh} \times 10^{-3}}{1.15 C_a \sigma_Y}} \ (mm)$$

σ_Y: Specified minimum yield stress (N/mm^2)

b: Length (mm) of the shorter side of the plate panel. However, it is to be taken as breadth of flange b_f (mm) or breadth of web $b_w(mm)$ in the case of corrugated bulkheads (*See* Fig. 10.9.2-1)

a: Length (mm) of the longer side of the plate panel.

α: Aspect ratio, to be taken as a/b.

P_{slh}: Equivalent pressure (kN/m^2) for the plate panels, as specified in Table 10.9.2-1

C_a: Coefficient of axial force effect as specified in Table 6.3.2-2 when $\alpha \geq 2$ or Table 6.3.2-3 when $\alpha < 2$. However, it is taken as 1.0 for corrugated bulkheads.

σ_{BM}: Stress (N/mm^2) due to hull girder bending, as specified in 10.9.1.4

Fig. 10.9.2-1 1/2 Pitch of Corrugated Bulkheads

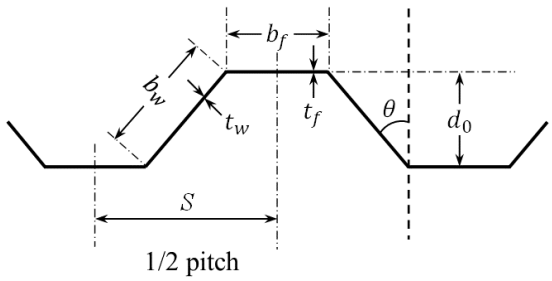

Table 10.9.2-1 Equivalent Pressure for Plate Panels

Member	P_{slh}
- Transverse bulkheads (including corrugated bulkheads) - Front and aft walls of tank - Transverse wash bulkheads - Tank top plates near transverse bulkheads / front and aft walls of tanks(1)	P_{slh-p} (4.8.2.4-4(1))
- Longitudinal bulkheads including corrugated bulkheads - Tank side walls - Longitudinal wash bulkheads - Tank top plates near longitudinal bulkheads / tank side walls(1)(2) - Sloping plates above and below longitudinal bulkheads	P_{slh-r} (4.8.2.4-4(2))

Notes:

Numbers in parentheses indicate section number.

(1) P_{slh-p} applies to plate panels within the range of $0.3\ell_{tk}$ from transverse bulkheads / front and aft walls of tanks, while P_{slh-r} applies to plate panels within the range of $0.3b_{tk}$ from longitudinal bulkheads / tank side walls. Definitions of ℓ_{tk} and b_{tk} are specified in Table 4.8.2-13 and Table 4.8.2-14.

(2) Notwithstanding **(1)** above, where large sloping plates (such as plates consisting of top side tanks) are arranged between tank top plates and longitudinal bulkheads /tank side walls, the tank top plates may be excluded from the members to be assessed.

10.9.3 Stiffeners

10.9.3.1

The section modulus of stiffeners attached to plates on which sloshing loads act is to be not less than the value obtained from the following formula.

$$Z = \frac{M_{slh}}{C_s \sigma_Y} \times 10^3 (cm^3)$$

M_{slh}: Equivalent bending moment ($kN\text{-}m$), as specified in **Table 10.9.3-1**.

C_s: Coefficient of axial force effect, as specified in **Table 6.4.2-4**.

Fig. 10.9.3-1 Stiffened System A

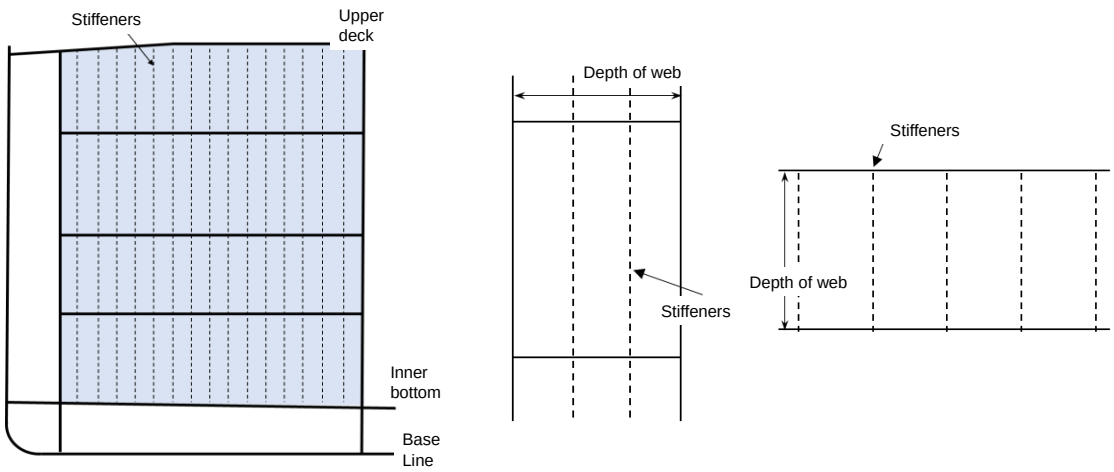

(a) Bulkhead, wash bulkhead (b) Vertical girder (c) Horizontal girder

Fig. 10.9.3-2 Stiffened System B

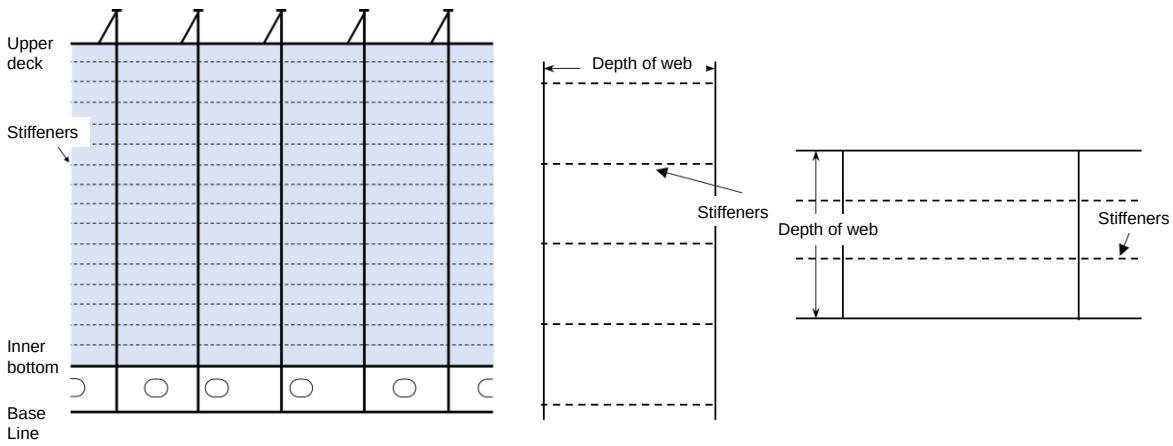

(a) Bulkhead (b) Vertical girder (c) Horizontal girder, cross-tie

Table 10.9.3-1 Equivalent Bending Moment for Each Member to be Assessed

Member to be assessed	Stiffened system	M_{slh}
- Stiffeners attached to tank top plates(1) (2)	Longitudinal	M_{slh-p}(**4.8.2.4-5(1)**) M_{slh-r}(**4.8.2.4-5(2)**)
	Transverse	M_{slh-p}(**4.8.2.4-5(2)**) M_{slh-r}(**4.8.2.4-5(1)**)
- Stiffeners attached to transverse bulkheads / front and aft walls of tank - Stiffeners attached to transverse wash bulkheads - Stiffeners attached to vertical girders which are attached to longitudinal bulkheads / tank side walls - Stiffeners attached to horizontal girders which are attached to transverse bulkheads / front and aft walls of tank - Stiffeners attached to cross-tie of transverse direction	System A(3)	M_{slh-p} (**4.8.2.4-5(1)**)
	System B(4)	M_{slh-p} (**4.8.2.4-5(2)**)
- Stiffeners attached to longitudinal bulkheads / tank side walls - Stiffeners attached to longitudinal wash bulkheads - Stiffeners attached to sloping plates above and below longitudinal bulkheads / tank side walls - Stiffeners attached to vertical girders which are attached to transverse bulkheads - Stiffeners attached to horizontal girders which are attached to longitudinal bulkheads / tank side walls - Stiffeners attached to cross-tie of longitudinal direction	System A (3)	M_{slh-r} (**4.8.2.4-5(1)**)
	System B (4)	M_{slh-r} (**4.8.2.4-5(2)**)

Notes:
Numbers in parentheses indicate section number.

(1) M_{slh-p} applies to stiffeners attached to plate panels within the range of $0.3\ell_{tk}$ from transverse bulkheads / front and aft walls of tank, while M_{slh-r} applies to stiffeners attached to plate panels within the range of $0.3b_{tk}$ from longitudinal bulkheads / tank side walls. Definitions of ℓ_{tk} and b_{tk} are specified in **Table 4.8.2-13** and **Table 4.8.2-14**.

(2) Notwithstanding **(1)** above, where large sloping plates (such as plates consisting of top side tanks) are arranged between tank top plates and longitudinal bulkheads /tank side walls, tank top plates may be excluded from the members to be assessed.

(3) *See* **Fig. 10.9.3-1**

(4) *See* **Fig. 10.9.3-2**

10.9.4 Webs of Girders

10.9.4.1

The web thickness t_w of girders on which sloshing loads act is to be not less than the value obtained from the following formula.

$$t_w = \frac{b}{2}\sqrt{\frac{P_{slh} \times 10^{-3}}{1.15 C_a \sigma_Y}} \ (mm)$$

P_{slh}: Equivalent pressure (kN/m^2) for the plate panels, as specified in **Table 10.9.4-1**

C_a: Coefficient of axial force effect as specified in **10.9.2.1**

b: Length (mm) of the shorter side of the plate panel

Table 10.9.4-1 Equivalent Pressure for Each Member to be Assessed

Member to be assessed	P_{slh}
- Horizontal girders attached to transverse bulkheads / front and aft walls of tanks - Horizontal girders attached to transverse wash bulkheads - Vertical girders attached to longitudinal bulkheads / tank side walls - Vertical girders attached to longitudinal wash bulkheads - Cross-ties in transverse direction	P_{slh-p} (**4.8.2.4-4(1)**)
- Horizontal girders attached to longitudinal bulkheads / tank side walls - Horizontal girders attached to longitudinal wash bulkheads - Vertical girders attached to transverse bulkheads / front and aft walls of tanks - Vertical girders attached to transverse wash bulkheads - Cross-ties in longitudinal direction	P_{slh-r} (**4.8.2.4-4(2)**)
Notes: Numbers in parentheses indicate section number.	

10.9.5 Corrugated Bulkheads

10.9.5.1

1 The thickness of flanges and webs of corrugated bulkheads is to be not less than the value specified in **10.9.2.1**.

2 The section modulus of 1/2 pitch of vertically corrugated bulkheads is to be not less than the value obtained from the following formula.

$$Z = \frac{M_{slh}}{\sigma_Y} \times 10^3 \ (cm^3)$$

M_{slh}: Equivalent bending moment ($kN\text{-}m$), as specified in **Table 10.9.5-1**

3 Notwithstanding **-1** and **-2** above, horizontally corrugated bulkheads are to be as deemed appropriate by the Society.

Table 10.9.5-1 Equivalent Bending Moment for Each Member to be Assessed

Member to be assessed	M_{slh}
Corrugated transverse bulkheads	M_{slh-p} (**4.8.2.4-6**)
Corrugated longitudinal bulkheads	M_{slh-r} (**4.8.2.4-6**)
Notes: Numbers in parentheses indicate section number.	

Chapter 11 STRUCTURES OUTSIDE CARGO REGION

Symbols

For symbols not specified in this Chapter, refer to 1.5.

σ_Y: Specified minimum yield stress (N/mm^2)

S: Spacing (m) of girders

s: Spacing (m) of stiffeners

K: Material factor of the steel used, as shown below:

0.78 (for HT32)

0.72 (for HT36)

0.68 (for HT40)

E: Modulus of elasticity 2.06×10^5 (N/mm^2)

T_{BAL}: Minimum design ballast draft (mm)

11.1 General

11.1.1 Overview

11.1.1.1

This Chapter specifies the requirements shown in Table 11.1.1-1 as the structural requirements for structures located outside the cargo region.

Table 11.1.1-1 Overview of Chapter 11

Section	Title	Overview
11.1	General	Overview of this Chapter
11.2	Bow Construction	Requirements for the bow stiffening structure
11.3	Superstructures and Deckhouses	Requirements for superstructures and deckhouses
11.4	Machinery Spaces	Requirements for machinery spaces
11.5	Stern Construction	Requirements for the stern stiffening structure, stern frame, etc.

11.1.2 Application

11.1.2.1

For items not specified in this Chapter, the requirements of the relevant Chapters are to apply.

11.2 Bow Construction

11.2.1 General

11.2.1.1 General

1 Suitable arrangement to resist panting are to be provided in way of spaces from the fore end of the ship to an appropriate point beyond the collision bulkhead.

2 Appropriate reinforcement is to be provided at the connections to the collision bulkhead considering the continuity of strength fore and aft of the collision bulkhead.

11.2.1.2 Net Scantling Approach

Unless clearly indicated to be gross scantlings, the scantlings specified in this **11.2** are to be net scantlings.

11.2.1.3 Scantlings of Plates, Stiffeners and Primary Supporting Members

Unless specifically indicated in this **11.2**, the scantlings of plates, stiffeners and primary supporting members are to be in accordance with **6.3**, **6.4** and **7.2**.

11.2.1.4 Consideration for Sloshing

Where the fore peak tank is used as a deep tank, appropriate consideration is to be given to sloshing, such as providing swash bulkheads or increasing the scantlings of the structural members.

11.2.2 Strengthened Bottom Forward

11.2.2.1 Application

For ships with a bow draught under $0.037L_{C230}$ in the ballast condition, the requirements of **10.6** are to be applied. The definition of L_{C230} is as specified in **Table 1.4.2-2**.

11.2.3 Structural Strength Against Bow Impact Pressure

11.2.3.1 Application

1 For high-speed ships with large bow flare (car carriers, ro-ro ships, LNG carriers or low temperature LPG carriers, etc.), the requirements of **10.7.1** are to be applied.

2 For the ships with a length of not less than 250 m and C_B of not less than 0.8, the requirements of **10.7.2** are to be applied.

11.2.4 Bow Shape

11.2.4.1 Bulbous Bow

1 Where a bulbous bow is fitted, the structural arrangements are to be such that the bulb is adequately supported and integrated into the fore peak structure.

2 At the forward end of the bulb the structure is generally to be supported by horizontal diaphragm plates spaced about 1 m apart in conjunction with a deep centreline web.

3 In general, vertical transverse diaphragm plates are to be arranged in way of the transition from the peak framing to the bulb framing.

4 In way of a wide bulb, additional strengthening in the form of a centreline wash bulkhead is generally to be fitted.

5 In way of a long bulb, additional strengthening in the form of transverse wash bulkheads or substantial web frames is to be fitted.

6 The shell plating is to be increased in thickness at the forward end of the bulb and also in areas likely to be subjected to contact with anchors and chain cables during anchor handling.

11.2.4.2 Ships with Other Bow Shapes

The bow structure of the ships having another bow shape is to be as deemed appropriate by the Society.

11.2.5 Shell Plating Forward of Collision Bulkhead

11.2.5.1 Plate Stems

1 The thickness of steel plate stems at the scantling draught is not to be less than that obtained from the following formula. Above and below the scantling draught, the thickness may be gradually tapered toward the stem head and the keel. At the upper end of the stem it may be equal to the thickness of the side shell plating (at the fore end part), and at the lower end of the stem, it is to be equal to the thickness of the plate keel.

$$t = 1.5\sqrt{(L_{C230} - 50)\frac{235}{\sigma_Y}} \text{ (mm)}$$

L_{C230}: As given in Table 1.4.2-2.

2 Notwithstanding **-1** above, the thickness of the steel plate stem may be the same as that of the side shell plating of the bow at the position of the freeboard deck and may be the same as that of the side shell plating of the forecastle at the position of the forecastle.

3 Ribs are to be provided on the stem plates at an interval preferably not exceeding 1 m, and where the radius of curvature at the fore end of the stem is large, proper reinforcement is to be made by providing a centre line stiffener or increasing the thickness of the stem plates specified in **-1** or other appropriate means. Where appropriate reinforcement is not provided, horizontal ribs are to be installed at the pitch not exceeding 600 mm to increase the stiffness of the steel plate stem.

11.2.5.2 Shell Plating

Shell plating fitted with hawse pipes and the plating below them is to be increased in thickness or to be doubled, and is to be constructed so that their longitudinal seams are not damaged by anchors and anchor cables.

11.2.6 Stiffening Structure Forward of Collision Bulkhead

11.2.6.1 Arrangement of Floors, Girders, Etc.

1 The structure forward of the collision bulkhead is to be supported by extending the centre girder to the stem or providing a deep centre girder or centreline longitudinal bulkhead. Where a centre girder is used, the minimum web depth and thickness are not to be smaller than the requirements for the depth of the double bottom in the adjacent cargo hold region. In addition, the upper edge of the centre girder is to be reinforced.

2 The minimum depth of the floor along the centreline of the hull is not to be smaller than the required height of the double bottom in the most forward cargo hold.

3 The arrangement of the longitudinal framing system of the bottom is to be as specified in the following **(1)** to **(3)**.

(1) Floors and side transverses supporting bottom longitudinals and side longitudinals are to be provided at intervals not exceeding 3.5 m or four times spacing of the frames, whichever is smaller.

(2) The floors and side transverses are to be effectively connected to each other and deck transverses are to be arranged on the deck in the same section (same plane) to create a ringed structure.

(3) Side girders of appropriate scantling are to be provided in line with those abaft of the collision bulkhead in order to give additional stiffness to the flat bottom structure.

4 The arrangement of the transverse framing system of the bottom is to be in accordance with the following **(1)** and **(2)**.

(1) Floors with adequate height are to be installed on each frame.

(2) Side girders are to be installed at intervals not exceeding 2.5 m approx.

5 Notwithstanding **-1** to **-4** above, the spacing of the girders may be increased when assessment of the bottom structure is conducted by grillage analysis or finite element analysis.

11.2.6.2 Longitudinal Framing System

1 The bottom structure of the longitudinal framing system is to be in accordance with the following **(1)** and **(2)**.

(1) In the case of a single bottom structure, the free edge is to be appropriately stiffened.

(2) The floor is to be reinforced by providing stiffeners on the web at each point where a longitudinal passes through the floor.

2 The side structure of the longitudinal framing system is to be in accordance with the following **(1)** to **(5)**.

(1) Side transverses are to be reinforced by struts and girders, and by providing decks with lightening holes, which extend from one side of the ship to the other. Vertical intervals of members supporting side transverses is to be not greater than that obtained from the following formula as a standard:

$5 + 0.0125L_C - 0.1T_{SC}$ (m)

L_C: Ship length (m) specified in Table 1.4.2-2

T_{SC}: Scantling draught (m) specified in Table 1.4.2-2

(2) The struts in **-2(1)** above are to be in accordance with the following **(a)** to **(c)**. When it is difficult to follow these requirements, a method deemed appropriate by the Society may be used.

(a) The scantlings of the struts are to be in accordance with 7.4.2. The load F (kN) used is to be obtained from the following formula:

$F = PSb \times 10^3$

P: Lateral pressure in maximum load conditions as specified in 4.4.2.2-1, to be calculated at the position where the strut is installed.

S: Spacing (m) of the side transverses

b: Width (mm) supported by the struts

(b) Struts are to be effectively connected to the side transverses by using brackets and other means, and tripping brackets are to be provided on the side transverses at the point where the strut is connected.

(c) Where the width of the face plate of struts exceeds 150 mm on one side of the web, stiffeners are to be provided at appropriate intervals and are to be connected to the face plate to support the face plate.

(3) Where steel plates with lightening holes extending from side to side of the ship in tanks containing liquid which support side transverses, those are to be in accordance with the following **(a)** and **(b)**:

(a) The section modulus of the stiffeners (gross scantling) attached to the steel plates is not to be less than that obtained from the following formula:

$5 + 0.4L_{C300}$ (cm^3)

L_{C300}: Ship length (m) specified in **Table 1.4.2-2**

(b) The thickness of the plate placed on the stiffeners (gross scantling) is not to be less than that obtained from the following formula:

$5.5 + 0.2\sqrt{L_{C300}}$ (mm)

L_{C300}: Ship length (m) specified in **Table 1.4.2-2**

(4) The side transverses are to be effectively connected to the floor. When side transverses are connected to the floor, the scantlings of the side transverse at the bottom layer span are to be determined so that the scantlings of the web and face plate will not change abruptly from the those of the floor, and in the lower half of the span, the sum of the effective sectional area of the web and sectional area of the face plate is to be not less than the specified sectional area of the floor web.

(5) The side transverses are to be reinforced by providing stiffeners on the web at each point where a longitudinal passes through the side transverse. Such stiffeners may be placed at alternate longitudinals in middle parts of spans except the lowest span.

3 The scantlings of ships with different structures from that specified in **-1** and **-2** above are to be as deemed appropriate by the Society.

11.2.6.3 Transverse Framing System

1 The bottom structure of the transverse framing system is to be in accordance with the following **(1)** and **(2)**.

(1) The floor is to reach an appropriate height to ensure the stiffness of the hull, and stiffeners are to be provided appropriately to ensure stiffness.

(2) The floors and girders of ships with single bottoms are to be as specified in the following **(a)** and **(b)**.

(a) The upper edge of the floor and the centreline girder is to be appropriately stiffened.

(b) The thickness of the side girders is to be approximately equal to the thickness of the centreline girder, and its height is to be appropriately determined according to the height of the floor.

2 The side structure of the transverse framing system is to be in accordance with the following **(1)** to **(3)**:

(1) The spacing of the frames is to be proper, as deemed appropriate by the Society.

(2) The side frames are to be supported by the structure specified in **(3)** at intervals not exceeding 2.5 m.

(3) Depending on the construction supporting the side frame, the requirements of **(a)** or **(b)** are to be applied:

(a) Where stiffeners are installed on each side frame and plates with lightening holes attached to the stiffeners from side to side of the ship.

In tanks containing liquid, the section modulus of the stiffeners and the thickness of the plate placed on the stiffeners is to be as specified in **11.2.6.2-2(3)**.

(b) Where the side frame is supported by side stringers.

i) The scantlings of the side stringers are to be as specified in **7.2**.

ii) The side stringers are to be reinforced by providing stiffeners on the web at each point where the frame passes through the side stringer. Arrangement of the stiffeners at alternate frames is acceptable near the centre of supporting points of the side stringer.

iii) Where struts are used to support side stringers, the struts are to be in accordance with the following **1)** to **3)**.

1) The scantlings of the struts are to be as specified in **7.4.2**. The load F (kN) is to be obtained from the following formula:

$F = PSb \times 10^{-3}$

P: Lateral pressure in maximum load conditions as specified in **4.4.2.2**; to be calculated at the position where the strut is installed.

S: Spacing (m) of the side stringers

b: Width (mm) supported by the struts

2) The struts are to be effectively connected to the side stringer by using brackets or other means, and tripping brackets are to be installed on the side stringer at the point where the struts are connected.

3) Where width of the face plate of struts exceeds 150 mm on one side of the web, stiffeners are to be provided at appropriate intervals and connected to the face plate to support the face plate.

11.3 Superstructures and Deckhouses

11.3.1 General

11.3.1.1 Scantlings of Plates, Stiffeners and Primary Supporting Members

1 Unless specifically specified in this **11.3**, the scantlings of plates, stiffeners and primary supporting members are to be in accordance with **6.3.2**, **6.4.2** and **7.2**.

2 The thicknesses (gross scantlings) of the first and second enclosed superstructure decks and tops of deckhouses in accommodation or navigation spaces above the freeboard deck are to be not less than 5.5 mm.

11.3.2 Superstructures

11.3.2.1 General

1 Ships are to be provided with forecastles. However, for ships other than bulk carriers as defined in **1.3.1(13), Part B**, the forecastle may be omitted where the bow freeboard is deemed sufficient by the Society.

2 For the items not specified in this **11.3.2**, the construction and scantlings of superstructures are to be in accordance with the requirements of the relevant Chapters.

3 The requirements of this **11.3.2** are prescribed for the superstructure up to the third tier above the freeboard deck. The construction and scantlings of superstructures above the third tier are to be as deemed appropriate by the Society.

4 The construction of the end bulkheads of the superstructure of ships with especially large freeboard may be suitably modified subject to approval by the Society.

11.3.2.2 Arrangement of Frames in Superstructure

1 The frame in superstructure is to be located at the position of the frame under the superstructure.

2 A web frame or partial bulkhead is to be installed at the position where such a web frame or partial bulkhead is considered necessary to ensure adequate transverse rigidity of the upper part of the watertight bulkhead and the structure of the superstructure.

11.3.2.3 Superstructure End Bulkheads

1 The thickness of the superstructure end bulkhead plating (gross scantlings) is not to be less than the value of **(1)** or **(2)** below, whichever is greater.

(1) $t_{gr} = 30s\sqrt{P_{GW} \times 10^{-3}} \times 10^{-3}$ (mm)

P_{GW} : Green sea pressure (kN/m^2) according to **4.9.2.2**

s: Spacing (mm) of the stiffeners

(2) The following values, depending on the deck tier of the bulkhead:

Bulkhead plating of first tier $t_{gr} = 5.0 + \frac{L'}{100}$ (mm)

Plating of other bulkheads $t_{gr} = 4.0 + \frac{L'}{100}$ (mm)

L' : Ship's length L_C (m). Where L_C exceeds 300 m, L' is taken as 300 m.

2 The section modulus of the stiffener on superstructure end bulkhead (gross scantlings) is not to be less than that obtained by the following formula:

$Z_{gr} = 350sP_{GW}\ell^2 \times 10^{-6}$ (cm^3)

s and P_{GW}: As specified in **-1(1)** above.

ℓ: Distance (m) between the decks at the position. However, when the value is less than 2 m, ℓ is taken as 2 m.

3 Both ends of the stiffeners of the exposed superstructure bulkhead are to be welded to the deck except where otherwise approved by the Society.

4 The fore end of the raised quarterdecks is to be provided with intact bulkheads. No opening is to be provided in this bulkhead. Fore end intact bulkheads may be provided with side scuttles of the non-opening type with deadlights specified in **14.11** and manholes with bolted covers.

5 The thickness of the plating and scantlings of the stiffeners installed on the bulkhead described in **-4** above are not to be less than those determined by the requirements of **-1** and **-2** above, considering this bulkhead as the first tier.

11.3.2.4 Side Plating in way of Superstructure where Superstructure Deck is Not Designed as a Strength Deck

Where the superstructure deck is not designed as a strength deck, the side plating and frames between decks are to be in accordance with **(1)** and **(2)** below.

(1) The thickness of the superstructure side plating is to be not less than that obtained from the following formula, but it is not to be less than 5.5 mm. The thickness of the side plating of superstructures exceeding $0.15L_C$ in length is to be suitably increased, except for those located in the end parts.

Side plating of the superstructure within $0.25L_C$ abaft from the fore end: $t = 1.15s\sqrt{L_C} \times 10^{-3}$ (mm)

Side plating of the superstructure other than the above: $t = 0.94s\sqrt{L_C} \times 10^{-3}$ (mm)

s: Spacing (mm) of the longitudinals or frames at that position

(2) The section modulus of the frames between decks is to be not less than that obtained by the following formula. However, the section modulus of the frames of the bridge and the partial superstructure within $0.5L$ of the ship's centre less than four spacing from its end is not to be less than that calculated when C is 0.74.

$Z = Cs\ell L_C \times 10^{-3}$ (cm^3)

s: Spacing (mm) of frames

ℓ: Height (m) between decks

C: Coefficient given by **Table 11.3.2-1**, depending on the type of deck

Table 11.3.2-1 Coefficient C

Type of deck	C
Between superstructure decks (except the following two cases)	0.37
Between superstructure decks within $0.125L$ from the stern	0.48
Between superstructure decks within $0.125L$ from the bow	0.62

11.3.2.5 Compensation at Ends of Superstructure*

1 Breaks of superstructure (ends of the superstructure) are to be strengthened according to the following requirements of **(1)** to **(3)**:

(1) Sheer strakes of the strength deck outside the superstructure are to be extended well into the superstructure and are to be increased in thickness by not less than 20 % above the normal thickness for sheer strakes at that location when no superstructure exists at that location.

(2) Side plating of the superstructure end is to be extended to an appropriate length beyond the end of the superstructure and taper off (decrease in height) gradually into the upper deck sheer strakes so as to avoid an abrupt change of form. The thickness of the side plating at the ends of the superstructure is to be 20 % greater than the normal thickness of the superstructure side plating, and this is to be taken as the standard.

(3) For superstructures located at the bow and stern, the requirements in **(1)** and **(2)** may be suitably modified.

2 The gangway, large freeing ports and other openings in the shell or bulwark are to be kept well clear of the end of superstructures. Where holes are unavoidably required in the plating, they are to be made as small as possible and to be circular or oval in form.

11.3.2.6 Closing Means for Access Openings in Superstructure End Bulkheads

1 The door to be provided on the access openings in the end bulkheads of enclosed superstructures are to be in accordance with the requirements in **(1)** to **(5)**:

(1) The doors are to be made of steel or other equivalent materials and to be permanently and rigidly fitted to the bulkheads.

(2) The doors are to be rigidly constructed, to be of equivalent strength to that of the intact bulkhead and to be weathertight when

closed.

(3) The means for securing weathertightness are to consist of gaskets and clamping devices or other equivalent devices and are to be permanently fitted to the bulkhead or the door itself.

(4) The doors are to be operable from both sides of the bulkhead.

(5) Hinged doors are, in general, to open outward.

2 The sills of the doors specified in **-1** are to be in accordance with the requirements in the following **(1)** and **(2)**:

(1) The height of the sill of the access openings is not to be less than 380 *mm* above the deck surface. For sills protecting access openings to spaces below the freeboard deck, the height is to comply with the requirements of **14.7.3.2**. However, higher sills may be required when deemed necessary by the Society.

(2) In principle, portable sills are not permitted. However, where the sill of an access opening is liable to hinder the passage of heavy spare parts or similar, a portable sill may be used subject to approval by the Society under the following conditions.

(a) Portable sills are to be installed before the ship leaves the port.

(b) Portable sills are to be gasketed and fastened by closely spaced through-bolts.

(c) Whenever sills are replaced after removal, the weathertightness of the sills and the relevant doors is to be verified by hose testing. The dates of removal, replacement and hose testing are to be recorded in the ship's log-book.

11.3.3 Deckhouses

11.3.3.1 General

1 For items not specified in this **11.3.3**, the construction and scantlings of deckhouses are to be in accordance with the relevant Chapters.

2 The requirements in this **11.3.3** are prescribed for deckhouses up to the third tier above the freeboard deck. The construction and scantlings of deckhouses above the third tier are to be as deemed appropriate by the Society.

3 For deckhouses in ships with an especially large freeboard, the construction of the bulkhead may be suitably modified subject to approval by the Society.

11.3.3.2 Thickness of Boundary Wall Plating and Scantlings of Stiffeners

1 The thickness of the boundary wall plating and the scantlings of the stiffeners are not to be less than those required by **11.3.2.3-1** and **-2**, taking the load specified in **4.9.2.2**.

2 Both ends of stiffeners on exposed boundary walls of deckhouses are to be connected to the deck by welding except where otherwise approved by the Society.

11.3.3.3 Closing Means for Access Openings

1 Access openings of deckhouses protecting companion ways giving access to the spaces under the freeboard deck or to the spaces in the enclosed superstructures are to be provided with closing means at least complying with the requirements in **11.3.2.6**. However, where stairways are enclosed with boundary walls fitted with closing means complying with the requirements of **11.3.2.6**, the external doors need not to be weathertight.

2 Openings in the top of a deckhouse on a raised quarterdeck or superstructure of less than standard height, having a height equal to or greater than the standard quarterdeck height, are to be provided with an acceptable means of closing but need not be protected by an efficient deckhouse or companionway, provided that the height of the deckhouse is at least the standard height of a superstructure. Openings in the top of a deckhouse which is less than the standard superstructure height may be treated in a similar manner. The standard quarter deck height and standard superstructure height here are as specified in the Regulation 33 of the International Convention on Load Line 1966 and Protocol 1988 relating to the International Convention on Load Lines, 1966.

11.3.3.4 Reinforcement of Construction under Deckhouses

1 Where deckhouses are arranged just above transverse or longitudinal bulkheads, special consideration is to be given to avoid discontinuities at the connection between the deckhouses and the deck structure.

2 On the side walls and end walls of large deckhouses, partial bulkheads or special stiffeners are to be arranged at intervals not exceeding about 9 *m* just above the bulkheads, web frames or under girders below.

3 At the vicinity of both ends of long deckhouses, special consideration is to be given to the construction connecting the boundary walls of deckhouses to the decks. The side walls are to be suitably constructed so as to maintain strength continuity and to avoid stress concentration.

4 The connections between deckhouses supporting crane posts and the deck structure are to be of appropriate construction such

that beams or longitudinal members are arranged beneath the wall surrounding the deckhouses to avoid stress concentration.

11.3.3.5 Spaces below Especially Heavy Equipment

Deckhouses below especially heavy equipment such as survival craft and deck machinery are to be suitably strengthened.

11.3.3.6 Deckhouses on the Upper Tiers of Deck

For deckhouses on the upper tiers of the deck, suitable measures are to be taken to prevent vibration in such a manner as to arrange the side walls and pillars of the respective tiers of the deckhouses in the same plane as far as is practicable.

11.4 Machinery Spaces

11.4.1 General

11.4.1.1 Application

1 For the items not specified in this **11.4**, the construction of machinery spaces is to be in accordance with the requirements in the relevant Chapters.

2 Appropriate reinforcement is to be provided in the connection with the machinery space forward bulkhead considering continuity of the strength of the machinery space forward bulkhead.

11.4.1.2 Scantlings of Plates, Stiffeners and Primary Supporting Members

Unless specifically indicated in this **11.4**, the scantlings of plates, stiffeners and primary supporting members are to be in accordance with **6.3.2**, **6.4.2** and **7.2**.

11.4.1.3 Reinforcement

Machinery spaces are to be reinforced with the web frames, deck transverses and pillars or by other means.

11.4.1.4 Supporting Structures for Machinery and Shafting

All parts of the machinery and shafting are to be efficiently supported and adjacent structures are to be adequately stiffened.

11.4.1.5 Twin Screw Ships and Those with High Power Engines

In twin screw ships and those with high power engines, the structure and attachments of the engines' foundations are to be especially strengthened in relation to the engines' proportions, weight, power, engine type, etc.

11.4.2 Main Engine Foundations

11.4.2.1 Ships with Double Bottoms*

1 In the main machinery space of ships with double bottoms, the main engines are to be seated directly upon thick inner bottom plating or thick seat plates (main engine seat plate) on the top of heavy foundations (girders) so arranged as to effectively distribute the weight.

2 Additional side girders are to be provided within the double bottom beneath the main lines of bolting and other suitable positions so as to ensure the satisfactory rigidity of the structure, considering the distribution of the weight of the main engine.

11.4.2.2 Ships with Single Bottoms

1 In the main machinery space of ships with single bottoms, the main engines are to be seated upon thick rider plates laid across the top of deep floor or heavy foundation girders efficiently bracketed and stiffened and having sufficient strength in proportion to the power and size of the engines.

2 The main lines of bolting that hold down the main engines to the rider plates mentioned in **-1** are to pass through the rider plates into the girder plates provided underneath.

3 In ships with longitudinal girders of not excessive spacing beneath the engine which is on the centre line of the hull, the centre girder may be omitted for the section where the engine is located.

11.4.3 Thrust Blocks and Foundations

11.4.3.1 Thrust Foundations

Thrust blocks are to be bolted to efficient foundations extending well beyond the thrust blocks and so arranged as to effectively distribute the loads into the adjacent structures.

11.4.3.2 Construction under Thrust Foundation

Additional girders are to be provided in way of the foundations, as necessary.

11.4.4 Plummer Blocks and Auxiliary Machinery Seats

11.4.4.1

Plummer blocks and auxiliary machinery seats are to be of ample strength and stiffness in proportion to the weight supported and the height of the foundations.

11.4.5 Sea Chest

11.4.5.1

1 Where a sea chest is provided in the shell plating for suction or discharge, the gross thickness of the sea chest is not to be less than that obtained by the following formula and is to be suitably stiffened so as to provide sufficient rigidity, as necessary. Also, the thickness is not to be less than the required thickness of the shell plating at that location.

$$t_{gr} = \sqrt{L_{C330}} + 2.0 \ \ (mm)$$

2 Reinforcement of the openings of sea chests is to be in accordance with **3.4.4.1**.

11.5 Stern Construction

11.5.1 Stern Frames

11.5.1.1 General

1 The requirements in this **11.5.1** apply only to stern frames without a rudder post.

2 Stern frames may be fabricated from steel plates or made of cast steel with a hollow section. For applicable material specifications and steel grades, *See* **3.2**. Stern frames of other material or construction will be specially considered.

3 Cast steel and fabricated stern frames are to be strengthened by adequately spaced horizontal plates with gross thickness not less than 80% of required thickness for stern frames, t_1. Where the radius of curvature is large, a centre line stiffener is to be provided. t_1 is according to **Table 11.5.1-1** or **Table 11.5.1-2**. Abrupt changes of section are to be avoided in castings; all sections are to have adequate tapering radius.

4 The scantlings specified in this **11.5.1** are to be gross scantlings.

11.5.1.2 Propeller Posts*

1 Propeller posts of the cast steel stern frames and those of plate stern frames are to be of a shape suitable for the stream line at the after part of the hull.

2 The gross scantlings of the propeller post are not to be less than those obtained from the formulae in **Table 11.5.1-1** for single screw ships and in **Table 11.5.1-2** for twin screw ships. Where a shoe piece is provided, below the propeller boss, the breadth and thickness of the propeller post are to be gradually increased in order to provide sufficient strength and stiffness in proportion to the shoe pieces. In the upper part of the propeller aperture, where the hull form is full and centreline supports are provided, the thickness of stern frames may be reduced to 80% of the applicable requirement.

3 Notwithstanding **-2** above, scantlings and proportions of the propeller post which differ from **Table 11.5.1-1** and **Table 11.5.1-2** may be considered acceptable provided that the section modulus of the propeller post section about its longitudinal axis is not less than that calculated with the propeller post scantlings in **Table 11.5.1-1** or **Table 11.5.1-2**, as applicable.

Table 11.5.1-1 Gross Scantlings of Propeller Posts (Single Screw Ship)

Propeller Post Gross Scantlings (mm)	Fabricated Propeller Post 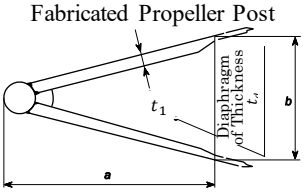	Cast Steel Propeller Post 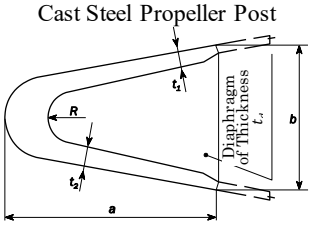	Bar Propeller Post, Cast or Forged Steel Propeller Post having Rectangular Section 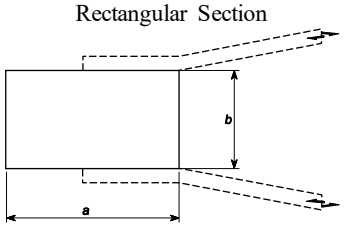
a	$50{L_1}^{1/2}$	$33{L_1}^{1/2}$	$10\sqrt{7.2L_C - 256}$
b	$35{L_1}^{1/2}$	$23{L_1}^{1/2}$	$10\sqrt{4.6L_C - 164}$
t_1	$2.5{L_1}^{1/2}$	$3.2{L_1}^{1/2}$	-
t_2	-	$4.4{L_1}^{1/2}$	-
t_d	$1.3{L_1}^{1/2}$	$2.0{L_1}^{1/2}$	-
R	-	50 mm	-

(Notes)

L_1: Length of ship L_C; however, when L_C exceeds 250 m, to be taken as 250 m.

Table 11.5.1-2 Gross Scantlings of Propeller Post (Twin Screw Ship)

Propeller Post Gross Scantlings (mm)	Fabricated Propeller Post 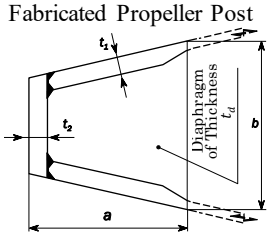	Cast Steel Propeller Post 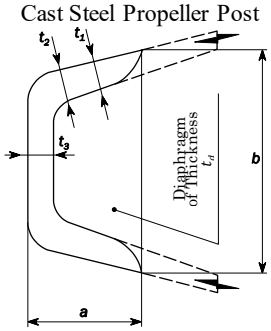	Bar Propeller Post, Cast or Forged, having Rectangular Section 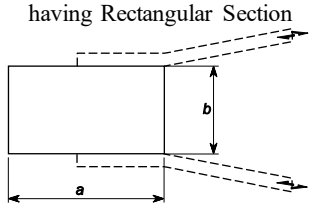
a	$25{L_1}^{1/2}$	$12.5{L_1}^{1/2}$	$2.4L_C + 6$
b	$25{L_1}^{1/2}$	$25{L_1}^{1/2}$	$0.8L_C + 2$
t_1	$2.5{L_1}^{1/2}$	$2.5{L_1}^{1/2}$	-
t_2	$3.2{L_1}^{1/2}$	$3.2{L_1}^{1/2}$	-
t_3	-	$4.4{L_1}^{1/2}$	-
t_d	$1.3{L_1}^{1/2}$	$2.0{L_1}^{1/2}$	-

(Notes)

L_1: Length of ship L_C; however, when L_C exceeds 250 m, to be taken as 250 m.

4 In single screw ships, the thickness of the propeller shaft bossing, included in the propeller post, is not to be less than 60% of

the dimension b required for bar propeller posts with a rectangular section.

5 Length of shaft hole of propeller boss

The length of the shaft hole of the propeller boss is not to be less than 1.25 times the inside diameter of the hole. Where the length of the shaft hole is less than the length of the bearing prescribed in **6.2.10, Part D,** it is recommended that the length of the shaft hole be adjusted to match that of the bearing.

6 The connection of a cast steel boss and fabricated stern frame is to be in accordance with **12.2.2.4**.

7 For ships with relatively high speed for their ship length, the scantlings of the various parts of propeller posts are to be suitably increased.

11.5.1.3 Shoe Pieces

1 The scantlings of each cross section of the shoe piece (*See* **Fig. 11.5.1-1**) are to be determined by the following formulae **(1)** to **(4)**, considering the bending moment and shear force acting on the shoe piece when the rudder force specified in **13.2.2** is applied to the rudder.

(1) The section modulus Z_z with respect to the vertical Z-axis is not to be less than:

$$Z_{z-gr} = \frac{MK_{SP}}{80} \ (cm^3)$$

M: Bending moment at the section considered, which is obtained from the following formula:

$$M = B_x(M_{\max} = B\ell) \ (N\text{-}m)$$

B: Supporting force in the pintle bearing (N) as given in **13.2.4.1**.

x: Distance (m) from the mid-point of the pintle bearing to the section considered, as specified in **Fig. 11.5.1-1**.

ℓ: Distance (m) from the mid-point of the pintle bearing to the fixed point of the shoe piece, as specified in **Fig. 11.5.1-1**.

K_{SP}: Material factor of the shoe piece as given in **13.2.1.2**.

(2) The section modulus Z_Y with respect to the transverse Y-axis is not to be less than:

$$Z_{Y-gr} = 0.5Z_{z-gr} \ (cm^3)$$

Z_{z-gr}: As specified in **(1)** above.

(3) The total section area A_S of the members in the Y- direction is not to be less than:

$$A_{S-gr} = \frac{BK_{SP}}{48} \ (mm^2)$$

B and K_{SP}: As specified in **(1)** above.

(4) At no section within length l is the equivalent stress to exceed $115/K_{SP}$ (N/mm^2). The equivalent stress σ_e is to be obtained from the following formula:

$$\sigma_e = \sqrt{\sigma_b{}^2 + 3\tau^2} \ (N/mm^2)$$

σ_b and τ: Bending stress and shear stress acting on the shoe piece, respectively, to be obtained from the following formulae:

Bending stress: $\sigma_b = \dfrac{M}{Z_Z(x)}$ (N/mm^2)

Shear stress: $\tau = \dfrac{B}{A_s}$ (N/mm^2)

Z_{z-gr}, A_{S-gr}, M, B: As specified in **(1)** to **(3)** above.

2 The thickness of the steel plates forming the main part of the shoe piece of the steel plate stern frame is not to be less than that of the steel plate forming the main part of the propeller post. Ribs are to be arranged in the shoe piece directly below the propeller post, under brackets (on the same line) and at other suitable positions.

Fig. 11.5.1-1 Shoe Piece

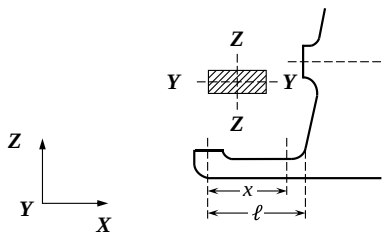

3 For the connection between the shoe piece and the propeller post, the top plate of the shoe piece is to be extended forward beyond the aft end of the propeller post. A bracket of the same thickness as the stern frame is to be fitted at the connection of the shoe piece and the aft end of the propeller post to keep a sufficient continuity of strength. (*See* **Fig. 11.5.1-2**)

4 Steel bolts for fixing zinc slabs to the shoe piece are not to be directly screwed into the shoe piece. Bolts are to be welded to the shoe piece or steel plates are to be welded to the shoe piece and bolts are screwed into the steel plates.

5 Shoe pieces of built-up construction are to be made watertight and the inside is to be coated with an effective coating material. Where no coating is applied to the inside of the built-up shoe piece, the thickness of the shoe piece is to be increased by not less than 1.5 *mm*.

6 Refer also to **11.5.1.1-3** above.

Fig. 11.5.1-2

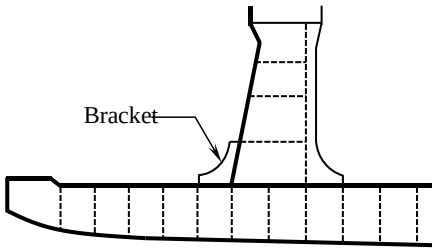

11.5.1.4 Heel Pieces

1 The heel piece of the stern frame is to be of a length at least three times that of the frame space at that part and is to be strongly connected to the keel.

2 The length of heel pieces is to be determined in accordance with the following **(1)** to **(3)**:

(1) In fabricated stern frames, the length of heel pieces may be equal to twice the frame space at the position of the heel piece, providing that the thickness of the flat keel connected to the heel piece is increased by 5 *mm*.

(2) The length ℓ of heel pieces is to be measured as shown in **Fig. 11.5.1-3**.

(3) Refer also to **11.5.1.1-3**.

Fig. 11.5.1-3

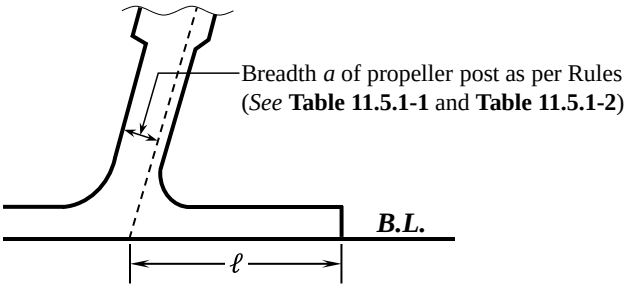

11.5.1.5 Rudder Horns*

1 The scantlings of each cross section of the rudder horn are to be determined by the following formulae **(1)** to **(3)**, considering the bending moment, shear force and torque acting on the rudder horn when the rudder force specified in **13.2.2** is applied to the rudder.

(1) The section modulus about Z_x with respect to the *X*-axis is not to be less than:

$$Z_{x-gr} = \frac{MK_{rh}}{67} \ (cm^3)$$

M: Bending moment at the section considered, as deemed appropriate by the Society.

K_{rh}: Material factor of the rudder horn from the requirements in **13.2.1.2**.

(2) The total sectional area A_h of the members in the *Y*-direction is not to be less than:

$$A_h = \frac{BK_{rh}}{48} \ (mm^2)$$

B: Supporting force (*N*) in the pintle bearing as given in **13.2.4.1**.

K_{rh}: As specified in **(1)**.

(3) At no section within the height of the rudder horn, the equivalent stress is not to exceed $120/K_{rh}$ (N/mm^2). The equivalent stress σ_e is to be obtained from the following formulae:

$$\sigma_e = \sqrt{{\sigma_b}^2 + 3({\tau}^2 + {\tau_t}^2)} \ (N/mm^2)$$

σ_b, τ and τ_t: Bending stress, shear stress and torsional stress acting on the rudder horn, respectively, as obtained from the following formulae:

Bending stress: $\sigma_b = \dfrac{M}{Z_{x-gr}}$ (N/mm^2)

Shear stress: $\tau = \dfrac{B}{A_{h-gr}}$ (N/mm^2)

Torsional stress: $\tau_t = \dfrac{1000T_h}{2A_{t-gr}t_{h-gr}}$ (N/mm^2)

M and B: As specified in **(1)** and **(2)** above.

T_h: Torsional moment, as deemed appropriate by the Society.

A_{t-gr}: Area (mm^2) in the horizontal section enclosed by the rudder horn

t_{h-gr}: Plate thickness (mm) of the rudder horn

Z_{x-gr}: As specified in **(1)**.

A_{h-gr}: As specified in **(2)**.

2 At the connection between the rudder horn and the hull structure, particular attention is to be paid to structural continuity.

3 When the connection between the rudder horn and the hull structure is designed as a curved transition into the hull plating, particular attention is to be paid to the effectiveness of the rudder horn plate in bending and the stresses in the transverse girder plates.

4 The thickness (mm) of the rudder horn side plating is not to be less than:

$$t_{gr} = 2.4\sqrt{L_C K_{rh}}$$

K_{rh}: As specified in **-1(1)** above.

5 The connection to the hull structure is to be in accordance with the following **(1)** to **(7)**.

(1) The rudder horn plating is to be effectively connected to the aft ship structure, e.g. by connecting the plating to the side shell of the hull and transverse or longitudinal girders, in order to achieve a proper transmission of force. (*See* **Fig. 11.5.1-4**)

(2) Brackets or stringers are to be fitted internally in the horn, in line with the outside shell plate (*See* **Fig. 11.5.1-4**), except in cases where not practicable.

(3) Transverse webs of the rudder horn are to be led into the hull up to the next deck in a sufficient number.

(4) Strengthened plate floors are to be fitted in line with the transverse webs of the rudder horn to achieve sufficient connection with the hull.

(5) The centre line bulkhead (wash bulkhead) in the after peak is to be connected to the rudder horn.

(6) Scallops are to be avoided in way of the connection between transverse webs and the shell plating. (*See* **Fig. 11.5.1-4**)

(7) The weld at the connection between the rudder horn plating and the shell plating is to be full penetration. The welding radius is to be as large as practicable and may be obtained by grinding. (*See* **Fig. 11.5.1-4**)

Fig. 11.5.1-4 Connection of Rudder Horn and Hull

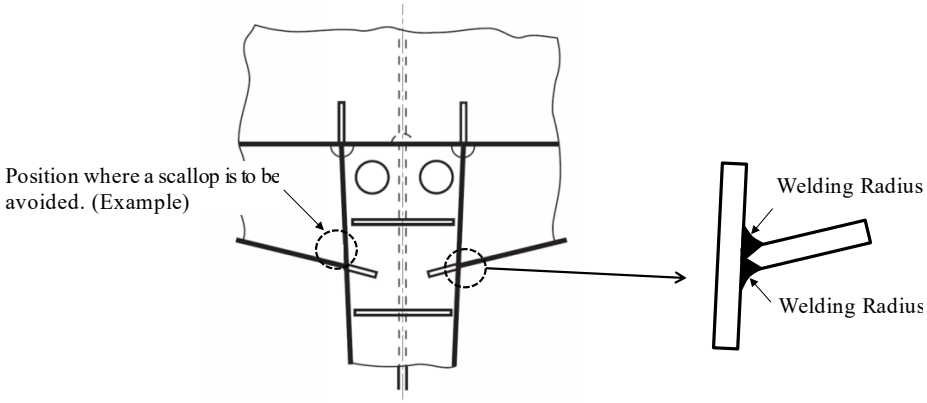

11.5.1.6 Attachment of Stern Frame to Floor

The stern frame is to be extended upward at the position of the propeller post and connected securely to the transom floor having a thickness not less than the value obtained by the following formula:

$t_{gr} = 0.035L_C + 8.5 \ (mm)$

11.5.1.7 Gudgeons

1 The depth of gudgeons is not to be less than the length of the pintle bearing.

2 The thickness of the gudgeon is not to be less than $0.25d_{p0}$. For ships specified in 13.2.1.5, the thickness of the gudgeon is to be appropriately increased.

Where:

d_{p0}: Actual diameter (mm) of the pintle measured at the outer surface of the pintle sleeve

11.5.1.8 Rudder Trunk

1 The requirements of this 11.5.1.8 apply to trunk configurations which are extended below the stern frame and contain the rudder stock, and are arranged in such a way that the trunk is stressed due to rudder action.

2 The material, welding, and connection to the hull are to be in accordance with the following **(1)** to **(4)**.

(1) The steel used for the rudder trunk is to be of weldable quality, with a carbon content not exceeding 0.23 % or carbon equivalent (CEQ) not exceeding 0.41 %.

(2) The weld at the connection between the rudder trunk and the shell or the bottom of the skeg is to be full penetration.

(3) For rudder trunks extending below shell or skeg, the fillet shoulder radius r (mm) (*See* Fig. 11.5.1-5) is to be as large as practicable and to comply with the following formula:

$r = 0.1d_l/K_T$

However, this value is not to be less than:

When $\sigma \geq 40/K_T$ N/mm^2 $r = 60$ mm

When $\sigma < 40/K_T$ N/mm^2 $r = 30$ mm

d_l: Diameter of the rudder stock defined in 13.2.5.2.

σ: Bending stress (N/mm^2) of the rudder trunk

K_T: Material factor for the rudder trunk as given in 13.2.1.2.

The fillet radius may be obtained by grinding. If disk grinding is carried out, score marks are to be avoided in the direction of welding. The fillet radius is to be checked with a template for accuracy. At least four profiles are to be checked. A report is to be submitted to the Surveyor.

(4) Rudder trunks comprising materials other than steel are to be specially considered by the Society.

3 The scantlings of the rudder trunk are to be in accordance with the following:

(1) The equivalent stress due to bending and shearing is not to exceed $0.35\sigma_Y$ of the material used.

(2) The bending stress on the welded rudder trunk is to comply with the following formula:

$\sigma \leq 80/K_T$

σ: As specified in **-2** above.

K_T: Material factor for the rudder trunk determined as given by 13.2.1.2, not to be taken less than 0.7.

σ_Y: Specified minimum yield stress (N/mm^2) of the material used.

For calculation of bending stress, the span to be considered is the distance between the mid-height of the lower rudder stock bearing and the point where the trunk is clamped into the shell or the bottom of the skeg.

Fig. 11.5.1-5 Fillet Radius of Fillet Weld

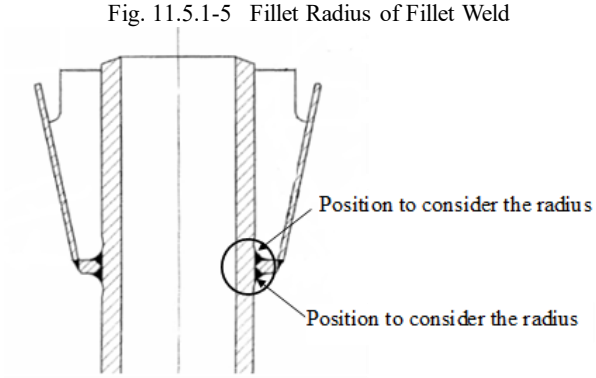

11.5.2 Arrangements to Resist Panting Abaft of After Peak Bulkhead

11.5.2.1 Scantlings of Plates, Stiffeners and Primary Supporting Members

Unless specifically indicated in this 11.5.2, the scantlings of plates, stiffeners and primary supporting members are to be in accordance with 6.3.2, 6.4.2 and 7.2.

11.5.2.2 Floors

The requirements in 11.2.6.3 apply to the scantlings and arrangement of the floors in the after peak. Floors are to be installed on each frame space in the after peak, and the floor is to be extended at least to the position above the stern tube. When the floor is not extended to the tween deck or deck, reinforcement is to be applied by providing a face plate on the upper edge.

11.5.2.3 Frames, Deck Beams, Deck Stringers, Etc.

1 The spacing of the frames of the transverse framing system is to be as deemed appropriate by the Society.

2 The requirements in 11.2.6.3-2 are to be referred to the construction under the bottom deck, which is to have effective stiffness.

3 Where the distance between the supporting points of the frame measured along the outer face of the frame exceeds 2.5 *m*, the scantlings of the frame are to be increased or additional side stringers, stiffening supporting members, etc. are to be provided to increase the stiffness of the side shell.

11.5.2.4 Cruiser Stern

Cruiser sterns are to be reinforced by structural members such as web frames and side stringers as necessary.

11.5.2.5 Shell Plating connected with Stern Frame*

The structural continuity of connections between stern frame and shell plating is to be maintained.

Chapter 12 WELDING

12.1 General

12.1.1 Overview

12.1.1.1

This Chapter specified the requirements for welding listed in **Table 12.1.1-1**.

Table 12.1.1-1 Overview of Chapter 12

Section	Subject	Overview
12.1	General	Overview of this Chapter.
12.2	Welded joint	General requirements for welded joint and special requirements for specific locations.
12.3	Workmanship	Requirements for workmanship.

12.1.2 Application

12.1.2.1

1 The welding used in hull construction and important equipment is to be in accordance with the requirements in **Part M**.

2 The thickness in this Chapter is, unless otherwise specified, gross thickness.

12.2 Welded joints

12.2.1 General

12.2.1.1 Arrangement of structural member

1 Special attention is to be paid to the arrangements of hull structural members so that welding may be carried out without much difficulty.

2 Welded joints are to be properly shifted from places where the stresses may be highly concentrated.

12.2.1.2 Butt welded joints*

Butt welded joints of plates having a difference in thickness over 4*mm* are generally to be tapered by not more than one-third at the end of the thicker plate.

12.2.1.3 Fillet welds

1 The kind and size of fillet welds in T-joints are to be in accordance with **Table 12.2.1-1** and their application to the hull construction is to be as required by **Table 12.2.1-2**. However, the larger size of fillet weld may be required for the area where the amount of corrosion is likely to be especially larger.

2 Where longitudinal strength members are mutually connected by fillet welds, the fillet sizes are to be in accordance with **Table 12.2.1-1** and **Table 12.2.1-2**, except that the total throat areas of fillet joints are not to be less than the minimum sectional area of the members.

3 Notwithstanding the requirement in **Table 12.2.1-1** and **Table 12.2.1-2**, where the ends of frames, beam and stiffeners are fillet welded to deck, shell, inner bottom or bulkhead plates, and where shearing force is only transmitted by the web, the fillet sizes are not to be less than 0.7 times the web thickness of the members.

4 Where beams, frames, stiffeners and girders are intermittently welded to deck, shell, inner bottom plates and bulkhead plates, the fillet welds are to be partly continuous as shown in **Fig. 12.2.1-1 (a)**. Where the members are backed by other members at the opposite side as shown in **Fig. 12.2.1-1 (b)** or **(c)**, the fillet welds are to be continuous for a proper length at the ends of the members or at the toes of the brackets of the members. The fillet weld may be as shown in **Fig. 12.2.1-1 (d)**, where the whole lengths of the joints are welded with the effective fillet size not less than $F2$.

5 In cases where the bulkheads of compartments intended to carry liquid cargoes are corrugated bulkheads, the welding of the corrugated bulkheads is to be in accordance with the requirements given in **12.2.2.1**. In cases where the bulkheads of compartments

not intended to carry liquids cargo are corrugated bulkheads, the kind of fillet weld used for the corrugated bulkhead is to be in accordance with the requirements for bulkheads.

6 In the case of a cross-joint where high in-plane loads act upon the attached plate and are transmitted through the weld and the intermediate plate (*See* **Fig. 12.2.1-2**), differences in thickness are to be taken into account and special consideration is to be given to measures such as appropriately increasing the fillet weld leg length, providing a groove, etc. in order to avoid any excessive stress concentrations.

Table 12.2.1-1 Kinds and Sizes of Fillet Welds

(Unit: *mm*)

Base metal thickness t (Built thickness)	Sizes of Fillet Welds					
	Lap joint 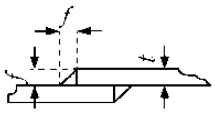		T joint 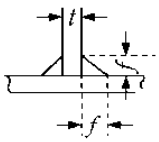		Measurement of weld length and pitch 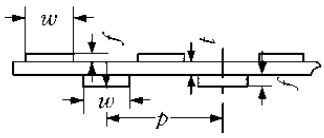	
	Continuous fillet weld		Intermittent fillet weld			
	Size of fillet f		Size of fillet f	Length of fillet w	Pitch P	
	$F1$	$F2$			$F3$	$F4$
Up to 5	3	3	3	60	150	250
6	4		4	75	200	350
7	5	4	5			
8						
9	6		6			
10						
11						
12	7	5	7			
13						
14						
15	8	6	8			
16						
17						
18	9	7	9			
19						
20						
21						
22	10	7	10			
23						
24						
25						
From 26 to 40	11	8	11			

Notes:

1 The size of the fillet "f" for T joints is to be determined according to the thickness of webs in case of connections of beams, frames, stiffeners and girders to deck plating, inner bottom plates, bulkhead plates, shell plating or face plates, and the thickness of the thinner plate in case of connections of other members.

2 Lap joints are to have the fillet size of $F1$ determined according to the thickness of the thinner plate.

3 The throat thickness of the fillet is to be $0.7f$.

4 Generally, $F2$ is to be the minimum fillet size for base metal thickness.

5 Intermittent fillet welds are to be staggered and performed on both sides for w from both ends.

6 The minus tolerance for fillet size is to be 10% of the nominal size.

Table 12.2.1-2 Application of Fillet Welds

Line No.	Item			Application		Kind of weld
1	Rudders	Rudder frames		Rudder plates		*F*3
2				Vertical frames forming main pieces		*F*1
3				Rudder frames (except above)		*F*2
4	Single bottoms	Floor plates		Shell plates	In strengthened bottom forward, after peak and deep tanks	*F*3
5					Elsewhere	*F*4
6				Face plates of floor plates	In strengthened bottom forward and main engine room	*F*3
7					Elsewhere	*F*4
8				Through plates and rider plate of centre keelsons		*F*1
9		Centre girder	Girders	Flat plate keels	In strengthened bottom forward	*F*2
10					Elsewhere	*F*3
11				Rider plates		*F*3
12				Floor plates		*F*2
13		Side girder	Girders	Shell plates	In strengthened bottom forward	*F*3
14					Elsewhere	*F*4
15				Rider plates	In main engine rooms	*F*3
16					Elsewhere	*F*4
17				Floor plates		*F*3
18	Double bottoms with transverse framing	Floors		Shell plates	In strengthened bottom forward	*F*3
19					Elsewhere	*F*4
20				Inner bottom plates	Bed plates of main engine and thrust bearings	*F*2
21					In strengthened bottom forward and main engine room (except above)	*F*3
22					Elsewhere	*F*4
23				Girders under inner bottom below main engine seatings		*F*1
24				Centre girders	In strengthened bottom forward and main engine room (except above)	*F*2
25					Elsewhere	*F*3
26				Margin plates		*F*2
27		Oiltight or watertight floors		Boundaries		*F*1
28		Stiffeners on floor plates		Oiltight or watertight floors		*F*3
29				Elsewhere		*F*4
30		Centre girders		Flat plate keels	Where oiltight or watertight	*F*1
31					Elsewhere	*F*3
32				Inner bottom plates	Where oiltight or watertight	*F*1
33					Lower portion of girders for main engine seatings or thrust bearings	*F*2
34					Elsewhere	*F*3

35		Side girders (intercostal plates)	Shell plates	In strengthened bottom forward	$F3$
36				Elsewhere	$F4$
37			Inner bottom plates	In engine rooms	$F3$
38				Elsewhere	$F4$
39			Floors	In strengthened bottom forward and main engine rooms	$F3$
40				Elsewhere	$F4$
41		Main engine girders	Inner bottom plates		$F2$
42			Shell plates		$F4$
43		Margin plates	Shell or gusset plates		$F1$
44		Tank side brackets	Margin plates		$F1$
45			Gusset plates		$F2$
46		Shell stiffeners	Connections to shell plates are as required for longitudinal frames		
47		Half-height girders	Connections to shell plates and floors are as required for side girders		
48	Double bottoms with longitudinal framing	Longitudinal frames	Shell plates in strengthened bottom forward		$F3$
49			Shell plates (except above) or inner bottom plates		$F4$
50		Floors	Shell plates and inner bottom plates	For two frame spaces at the end of floors	$F2$
51				Elsewhere	$F3$
52			Centre girders		$F2$
53		Brackets on centre girders	Center girders, shell plates and inner bottom plates		$F3$
54		Brackets on margin plates in double bottoms	Margin plates		$F2$
55			Shell plates and inner bottom plates		$F3$
56		Stiffeners on side girders	Side girders		$F4$
57	Frames	Shell plates	In after peak tanks, for $0.125L_c$ from fore end and in deep tanks		$F3$
58			Elsewhere		$F4$
59	Built-up frames	Webs	Shell plates or face plates	$0.125L_c$ from fore end and in deep tanks	$F2$
60				Elsewhere	$F3$
61	Decks	Stringer plates	Shell plates	In strength decks	$F1$
62				Elsewhere	$F2$
63		Beams	Decks	In tanks	$F3$
64				Elsewhere	$F4$
65	Built-up beams	Webs	Decks or face pates	In tanks	$F2$
66				Elsewhere	$F3$
67	Pillars	Pillars	Heels and heads		$F1$
68			Connections of built-up pillar members		$F3$
69	Hatchways	Coamings	Decks (except below)		$F2$
70			Hatchway corners on strength decks		$F1$
71		Portable beams	Connections of members		$F3$
72	Bulkheads	Stiffeners	Bulkhead plates	Above the lower ends of brackets connecting stiffeners to deck girder	$F1$
73				In deep tank bulkheads	$F3$
74				Elsewhere	$F4$
75		Bulkhead plates	Boundaries	In oiltight and watertight bulkheads	$F1$
76				Elsewhere	$F3$
77	Seatings	Girders or brackets	Bed plates	In seating for main	$F1$

<table>
<tr><td></td><td></td><td></td><td></td><td colspan="2">engines, thrust bearings, boiler bearers and main dynamo engines</td><td></td></tr>
<tr><td>78</td><td></td><td></td><td>Inner bottom plates or shell</td><td colspan="2">In seatings for main engine or thrust bearings</td><td>$F2$</td></tr>
<tr><td>79</td><td></td><td></td><td>Girder plates</td><td colspan="2">In seatings for main engine or thrust bearings</td><td>$F1$</td></tr>
<tr><td>80</td><td rowspan="9">Web beams, web frames, side stringers, deck girders and girders on bulkheads</td><td rowspan="8">Web plates or girder plates</td><td rowspan="2">Shell, decks or bulkheads</td><td colspan="2">In tanks, web frames for $0.125L_c$ from fore end and side stringers</td><td>$F2$</td></tr>
<tr><td>81</td><td colspan="2">Elsewhere</td><td>$F3$</td></tr>
<tr><td>82</td><td colspan="3">End connections of both ends of webs or girder plates to shell, deck, inner bottom plates or bulkheads</td><td>$F1$</td></tr>
<tr><td>83</td><td>Webs or face plates of webs</td><td colspan="2">In tanks, web frames for $0.125L_c$ from fore end and side stringers</td><td>$F2$</td></tr>
<tr><td>84</td><td rowspan="2">Web or face plates of webs</td><td rowspan="2">Elsewhere</td><td>Where face area exceeds 65 cm^2</td><td>$F2$</td></tr>
<tr><td>85</td><td>Where face area does not exceed 65 cm^2</td><td>$F3$</td></tr>
<tr><td>86</td><td>Tripping brackets on webs or girder plates</td><td colspan="3">Boundaries</td><td>$F3$</td></tr>
<tr><td>87</td><td>Slotted parts of webs or girder plates</td><td colspan="3">Webs of frames, beams or stiffeners</td><td>$F2$</td></tr>
<tr><td>88</td><td colspan="2">Brackets at ends of members</td><td colspan="3">Connections of members to brackets (except otherwise specified)</td><td>$F1$</td></tr>
</table>

1 Where the rider plates or inner bottom plates consist of bed plates of the main engine seating or seatings of other important machinery, the kind of fillet is to be in accordance with the requirements for the type of seating.

2 For connections other than those specified in double bottoms with longitudinal framing, the requirements for transverse framing are to be applied.

Fig. 12.2.1-1 Parts of Continuous Fillet Weld

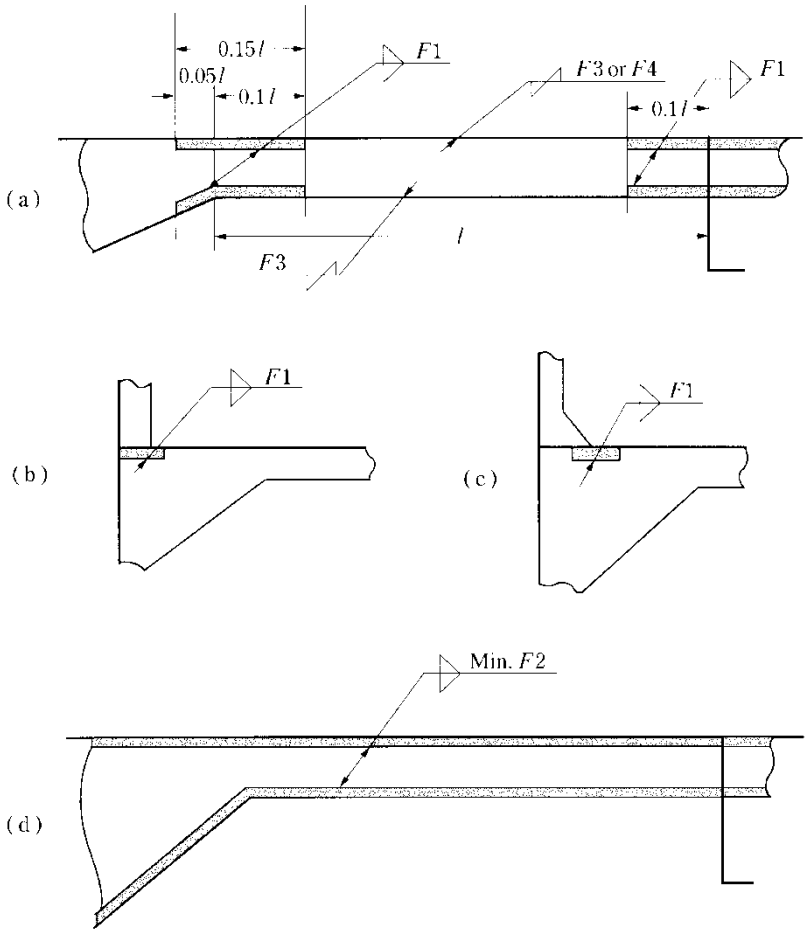

Fig. 12.2.1-2 Example of Cross-joint

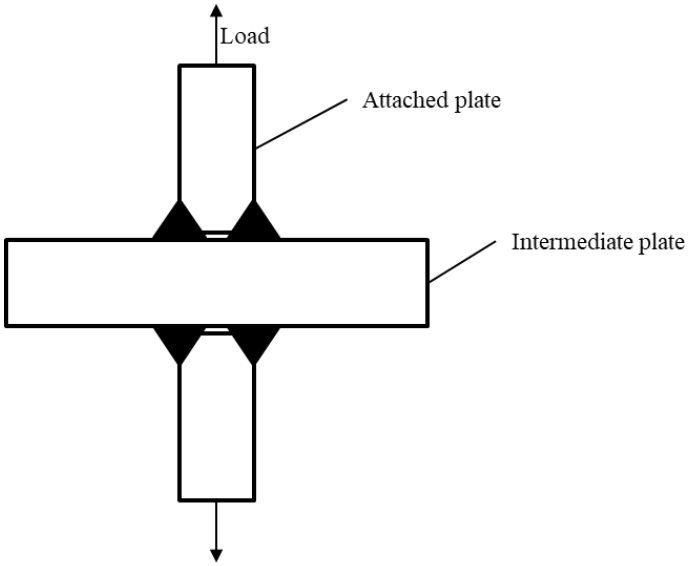

12.2.1.4 Full or partial penetration welds*

1 In areas with high tensile stresses or areas considered critical, full or partial penetration welds are to be used.

2 The welding bead of the full/partial penetration welds is to cover root of the groove.

3 For partial penetration welds the root face, f, is, to be taken between 3 *mm* and $t_{as\text{-}built}$ /2.

4 Examples of partial penetration welds are given on **Fig. 12.2.1-3**.

5 In case of full penetration welding, the root face is to be removed as appropriate, e.g. by gouging before welding of the back side.

6 For partial penetration welds with one side bevelling the fillet weld at the opposite side of the bevel is to satisfy the requirements given in **12.2.1.3**.

7 In area where full penetration weld is required for fatigue strength is to be in accordance with **9.1.4.2** and **9.1.4.3**.

8 In area where partial penetration weld is required for fatigue strength is to be in accordance with **9.1.4.3**.

9 For the application of requirement specified in preceding **-7** and **-8**, the extent from hot spots where full penetration weld or partial penetration weld is required for fatigue strength is not to be less than the large stress concentration area.

Fig. 12.2.1-3 Examples of partial penetration welds

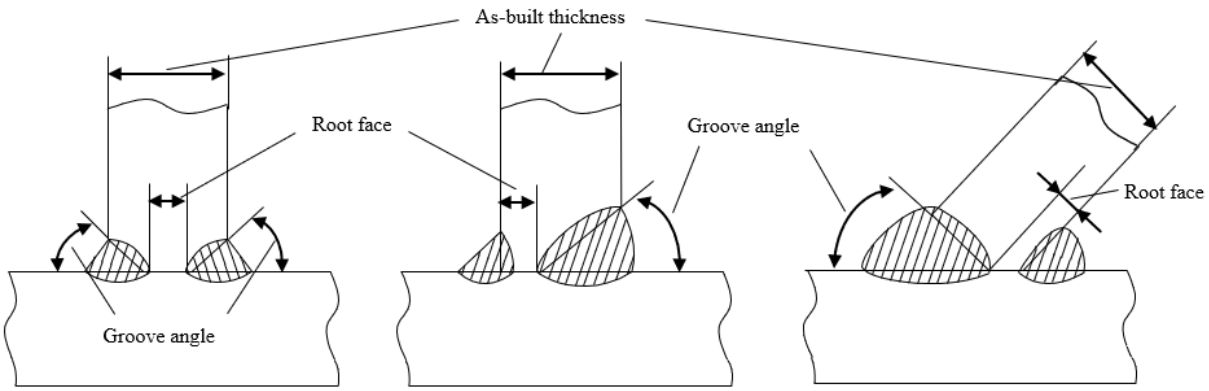

12.2.1.5 Other type of welded joints*

Slot welds are to have adequate shapes to permit a thoroughly fused bead to be applied all around the bottom edge of the opening. The fillet size of slot welds is to be *F*1 as specified in **Table 12.2.1-1** and the spacing of the slots is to be as determined by the Society.

12.2.2 Additional requirements for welded joint in specific location

12.2.2.1 Corrugated Bulkheads

1 The welding of corrugated bulkheads is to be in accordance with **Table 12.2.2-1**.

2 For the supporting members of corrugated bulkheads or stools, such as floors, girders or other primary supporting members and stiffeners, fillet weld leg length is to be suitably increased or to be bevelled and welded. In cases where the angle between the side plating of a lower stool and inner bottom plating is relative small, the fillet weld leg lengths for supporting members to inner bottom plating are to be suitably increased taking into account such an angle.

3 In cases where stools are fitted, the fillet weld leg length for the top or bottom plating of stools to the side plating of stools as well as the side plating of stools to inner bottom plating is to be suitably increased or to be bevelled and welded.

4 Where shedder plates are fitted at the lower parts of corrugated bulkheads, be welded to the corrugation and the top plate of the lower stool by one-side penetration welds or equivalent.

5 Where gusset plates are fitted at the lower parts of corrugated bulkheads, be welded to the top of the lower stool by either full penetration or deep penetration welds (*See* **Fig. 12.2.2-2**) and to the corrugations and shedder plates by one side penetration welds or equivalent.

Table 12.2.2-1 Welding of Corrugated Bulkheads

Type of Corrugated bulkhead		Application	Welding
Vertically corrugated bulkhead	Without stool	Upper deck	Double continuous fillet welding with a fillet weld leg length that is not less than 0.7 times the thickness of the corrugated bulkhead.
		Inner bottom	(1) For ships having a length, L_C, of 150*m* and above · Full penetration double bevel welds (2) For ships having a length, L_C, that is less than 150*m* · Full penetration double bevel welds for webs and flanges of the corrugated bulkhead that are within about 200*mm* from the corner of the corrugation (*See* **Fig. 12.2.2-1**) · For other parts, double continuous fillet welding with a fillet weld leg length that is not less than 0.7 times the thickness of the corrugated bulkhead.
		Corrugated bulkhead	Full penetration double bevel welds
	Lower stool	Top plate	(1) For ships having a length, L_C, of 150*m* and above · Full penetration double bevel welds (2) For ships having a length, L_C, that is less than 150*m* · Full penetration double bevel welds for webs and flanges of the corrugated bulkhead that are within about 200*mm* from the corner of the corrugation (*See* **Fig. 12.2.2-1**) · For other parts, double continuous fillet welding with a fillet weld leg length that is not less than 0.7 times the thickness of the corrugated bulkhead.
	Upper stool	Bottom plate	Double continuous fillet welding with fillet weld leg length that is not less than 0.7 times the thickness of the corrugated bulkhead.
Horizontally corrugated bulkhead		Upper deck, Inner bottom, Corrugated bulkhead	Double continuous fillet welding with a fillet weld leg length that is not less than 0.7 times the thickness of the corrugated bulkhead.

Fig. 12.2.2-1 Extent of about 200*mm* from the Corner of the Corrugation

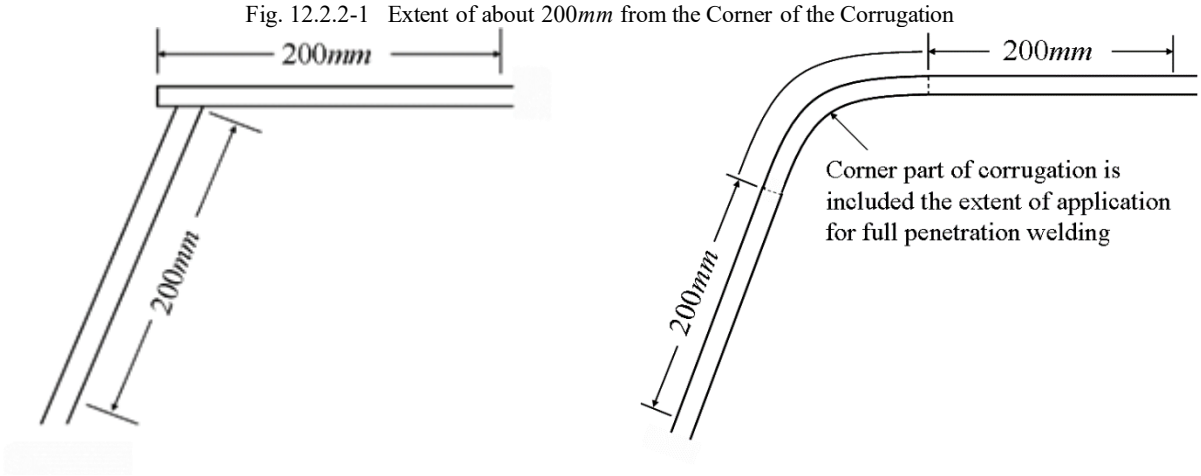

(a) Welded type (b) Bent type

Fig. 12.2.2-2

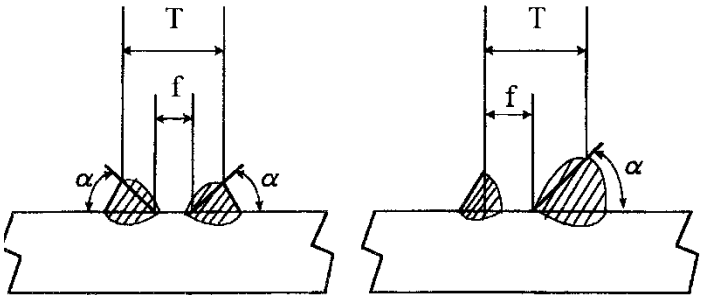

Root face (f): 3mm ~ T/3mm
Groove angle (α): 40° ~ 60°

12.2.2.2 Bilge Strakes for Midship Part

The bilge plating in the midship part is to be carefully worked so that deformations of the bilge circle may not exceed 1/3 of the thickness of bilge plating amidships.

12.2.2.3 Superstructure end bulkheads

Both ends of stiffeners on the exposed bulkheads of superstructures are to be connected to the deck by welding except where otherwise approved by the Society.

12.2.2.4 Connection of cast steel boss and plate parts of built-up stern frame*

The connection of a cast steel boss and built-up stern frame is to be well grooved and welded with full penetrations at the root as shown in **Fig. 12.2.2-3**. A cast steel boss having a shape different from that shown in **Fig. 12.2.2-3** may be used if enough consideration is paid to workmanship, at the discretion of the Society.

Fig. 12.2.2-3

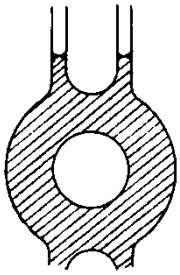

12.3 Workmanship

12.3.1 General

12.3.1.1 General

1 The workmanship is to be of the best quality. During construction, the builder is to supervise and inspect structural parts of the hull in detail.

2 The connection of structural parts of the hull is to be fair and sound.

3 The edges of steel plates are to be accurate and fair.

4 The flanging inner radius is not to be less than two times but not greater than three times the thickness of plate.

5 Jigs used for welding and construction work are to be appropriately treated (i.e. removed, smoothened out, etc.) upon completion of concerned work in order to avoid any adverse effects on strength. In cases where material of high tensile steel *KE*47 is used for the longitudinal structural members of upper decks region, jigs used for welding and construction work mounted directly on to any structural members using *KE*47 are, in principle, to be completely removed.

Chapter 13 RUDDERS

13.1 General

13.1.1 Overview

13.1.1.1

This Chapter specifies the requirements for the rudder as given in **Table 13.1.1-1**.

Table 13.1.1-1 Overview of **Chapter 13**

Section	Title	Overview
13.1	General	Overview and application
13.2	Rudders	Requirements for rudders

13.1.2 Applications

13.1.2.1 General

Unless otherwise specified, all scantling approach in this Chapter are the gross scantling approach.

13.2 Rudders

13.2.1 General

13.2.1.1 Application*

1 The requirements in this Chapter apply to double plate rudders of stream line section and ordinary shape, being divided into the following types.

(1) Type *A*: Rudders with upper and bottom pintles (*See* **Fig. 13.2.1-1(A)**)

(2) Type *B*: Rudders with neck bearing and bottom pintle (*See* **Fig. 13.2.1-1(B)**)

(3) Type *C*: Rudders having no bearing below the neck bearing (*See* **Fig. 13.2.1-1(C)**)

(4) Type *D*: Mariner type rudders with neck bearing and pintle, of which lower end is fixed (*See* **Fig. 13.2.1-1(D)**)

(5) Type *E*: Mariner type rudders with two pintles, of which lower ends are fixed (*See* **Fig. 13.2.1-1(E)**)

2 The construction of rudders having three or more pintles and of those having special shape or sectional form will be specially considered by the Society.

3 The construction of rudders designed to move more than 35 degrees on each side will be specially considered by the Society.

13.2.1.2 Materials*

1 Welded members of rudders such as rudder plates, rudder frames and rudder main pieces are to be made of rolled steel conforming to the requirements in **Part K**.

2 The required scantlings may be reduced when high tensile steels are used. When reducing the scantling, the material factor K is to be the values specified in **3.2.1.2**.

3 Rudder stocks, pintles, coupling bolts, keys, edge bars and cast parts of rudders are to be made of rolled steel, steel forging or carbon steel casting conforming to the requirements in **Part K**.

4 For rudder stocks, pintles, coupling bolts, keys, and edge bars, the specified minimum yield stress is not to be less than 200 N/mm^2. The requirements in this Chapter are for materials with a specified minimum yield stress of 235 N/mm^2. If materials having a specified minimum yield stress differing from 235 N/mm^2 are used, the material factor K is to be determined by the following formula.

$$K = \left(\frac{235}{\sigma_Y}\right)^e$$

Where:

$e = 0.75$ for $\sigma_Y > 235$ N/mm^2

$e = 1.00$ for $\sigma_Y \leq 235$ N/mm^2

Where:

σ_Y: Specified minimum yield stress (N/mm^2) of material used, and is not to be taken as greater than $0.7\sigma_B$ or 450 N/mm^2, whichever is smaller.

σ_B: Tensile strength (N/mm^2) of material used

5 When the rudder stock diameter is reduced because of using steels with a specified minimum yield stress exceeding 235 N/mm^2 special consideration is to be given to deformation of the rudder stock to avoid excessive edge pressures at the edge of bearings.

13.2.1.3 Welding and Design Details

1 Slot welding is to comply with the following **(1)** to **(3)**:

(1) Slot welding is to be limited as far as possible. Slot welding is not to be used in areas with large in-plane stresses transversely to the slots or in way of cut-out areas of Type *A*, *D* and *E* rudders.

(2) When slot welding is applied, the length of slots is to be minimum 75 *mm* with breadth of 2*t*, where *t* is the rudder plate thickness (*mm*). The distance between ends of slots is not to be more than 125 *mm* (*See* **Fig. 13.2.1-2**). The slots are to be fillet welded around the edges and filled with a suitable compound, e.g. epoxy putty. Slots are not to be filled with weld.

(3) Continuous slot welds may be used in lieu of slot welds. Where continuous slot welds are used, the root gap is to be between 6 *mm* and 10 *mm*. The bevel angle is to be at least 15° (*See* **Fig. 13.2.1-2**).

2 In way of the rudder horn recess of Type *A*, *D* and *E* rudders the radii in the rudder plating (except in way of solid part in cast steel) are not to be less than 5 *times* the plate thickness, but in no case less than 100 *mm*. Welding in side plate are to be avoided in or at the end of the radii. Edges of side plate and weld adjacent to radii are to be ground smooth.

3 Welds in the rudder side plating subjected to significant stresses from rudder bending, and welds between plates and heavy pieces (solid parts in forged or cast steel or very thick plating) are to comply with the following **(1)** to **(3)**:

(1) These are to be made as full penetration welds.

(2) In way of highly stressed areas e.g. cut-out of Type *A*, *D* and *E* rudders and upper part of Type *C* rudders, cast or welding on ribs is to be arranged.

(3) Two sided full penetration welding is normally to be arranged. Where back welding is impossible, one side welding using steel backing bars is, in principle, to be performed. In such cases, one sided continuous welding is to be used to weld the steel backing bars to bevelled edge (*See* **Fig. 13.2.1-3**). The bevel angle is to be at least 15 *degrees* for one sided welding. Other welding procedures, however, may be approved when deemed appropriate by the Society.

4 Requirements for welding and design details of rudder trunks are described in **11.5.1.8**.

5 Requirements for welding and design details when the rudder stock is connected to the rudder by horizontal flange coupling are described in **13.2.8.1-5**.

6 Requirements for welding and design details of rudder horns are described in **11.5.1.5-5**.

Fig. 13.2.1-3 Use of Steel Backing Bar in way of Full Penetration Welding of Rudder Side Plating

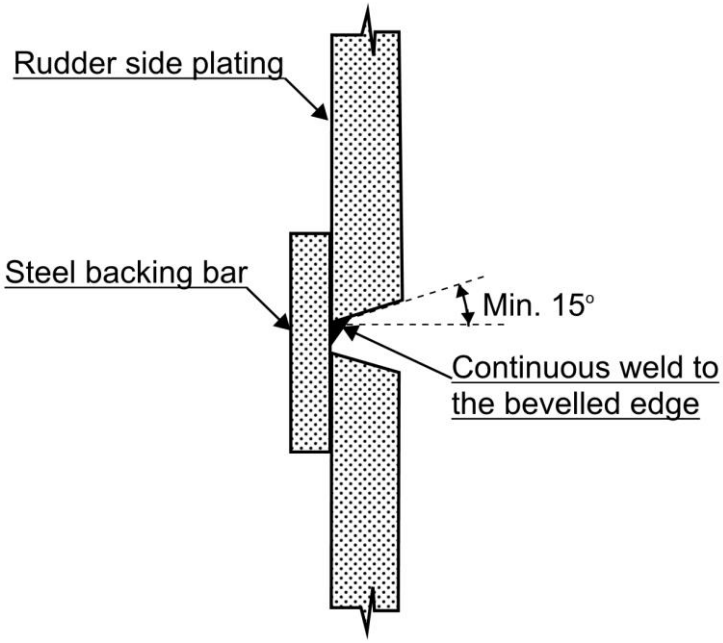

13.2.1.4 Equivalence*

1 The Society may accept alternatives to requirements given in this Chapter, provided they are deemed to be equivalent.

2 Direct analyses adopted to justify an alternative design are to take into consideration all relevant modes of failure, on a case by case basis. These failure modes may include, amongst others: yielding, fatigue, buckling and fracture. Possible damages caused by cavitation are also to be considered.

3 If deemed necessary by the Society, lab tests, or full scale tests may be requested to validate the alternative design approach.

13.2.1.5 Increase in Diameter of Rudder Stocks for Special Cases

1 In ships which may be frequently steered at a large helm angle when sailing at their maximum speed, such as fishing vessels, the diameters of rudder stocks and pintles, as well as the section modulus of main pieces, are not to be less than 1.1 times those required in this Chapter.

2 In ships which might require quick steering, the diameter of rudder stocks is to be properly increased beyond the requirements in this Chapter.

13.2.1.6 Sleeves and Bushes

Bearings located up to well above the designed maximum load line are to be provided with sleeves and bushes.

Fig. 13.2.1-1

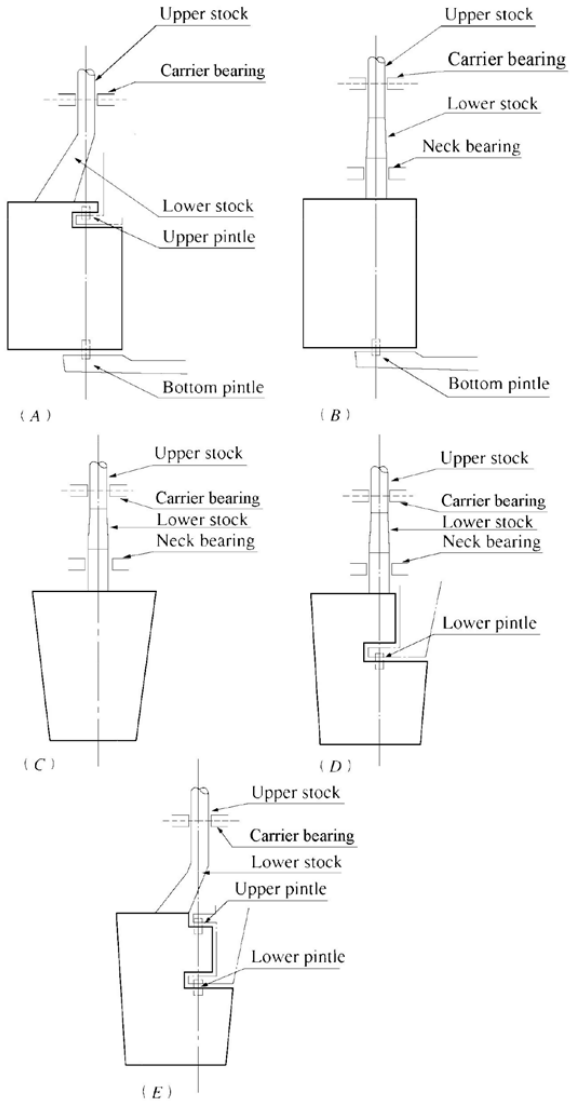
Upper stock
Carrier bearing
Lower stock
Upper pintle
Bottom pintle
(A)
Upper stock
Carrier bearing
Lower stock
Neck bearing
Bottom pintle
(B)
Upper stock
Carrier bearing
Lower stock
Neck bearing
(C)
Upper stock
Carrier bearing
Lower stock
Neck bearing
Lower pintle
(D)
Upper stock
Carrier bearing
Lower stock
Upper pintle
Lower pintle
(E)

Fig. 13.2.1-2 Slot welding and Continuous Slot Welding

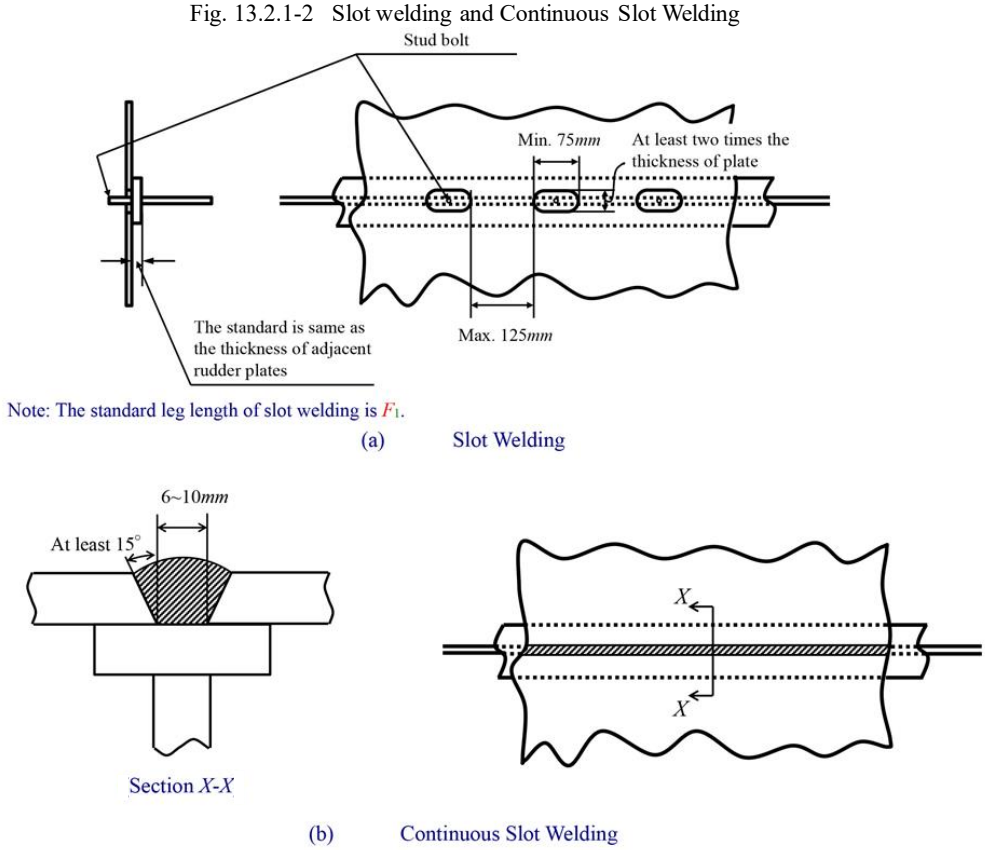

13.2.2 Rudder Force

13.2.2.1

The rudder force FR is used to determine the rudder scantlings and is obtained from the following formula, for ahead and astern conditions. However, when the rudder is arranged behind the propeller that produces an especially great thrust, the rudder force is to be appropriately increased.

$$F_R = 132K_1K_2K_3AV^2 \ (N)$$

Where:

A: Area of rudder plate (m^2)

V: Speed of ship (kt)

When the speed is less than 10 *knots*, V is to be replaced by $V_{\min}$ obtained from the following formula:

$$V_{\min} = \frac{V+20}{3} \ (kt)$$

For the astern condition, the astern speed V_a as defined in **2.1.30, Part A** is to be obtained from the following formula. However, when the maximum astern speed is designed to exceed V_a, the design maximum astern speed is to be used.

$$V_a = 0.5V \ (kt)$$

Where:

K_1: Factor depending on the aspect ratio Λ of the rudder area obtained by the following formula.

$$K_1 = \frac{\Lambda+2}{3}$$

Λ: As obtained from the following formula, however, Λ is not required to be greater than 2

$$\Lambda = \frac{h^2}{A_t}$$

h: Mean height of rudder (m), which is determined according to the coordinate system in **Fig. 13.2.2-1**.

A_t: Sum of rudder plate area A (m^2) and area of rudder post or rudder horn, if any, within the mean height of Rudder h

K_2: Factor depending on the rudder profile (*See* **Table 13.2.2-1**)

K_3: Factor depending on the location of rudder, as specified below:

For rudders outside the propeller jet: 0.8

For rudders behind a fixed propeller nozzle: 1.15

Otherwise: 1.0

Fig. 13.2.2-1 Coordinate System of Rudders

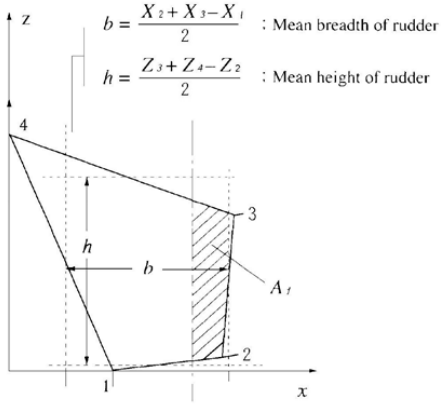

Table 13.2.2-1 Factor K_2

Profile Type	K_2	
	Ahead condition	Astern condition
NACA-00 series Göttingen 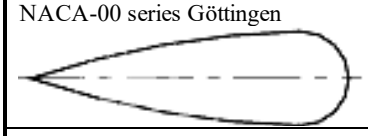	1.10	0.80
Flat side 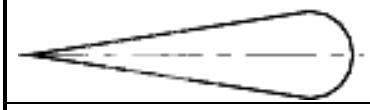	1.10	0.90
Hollow 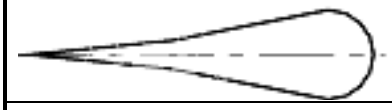	1.35	0.90
High lift rudders 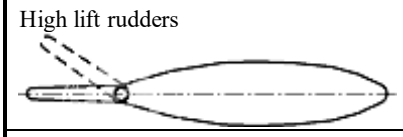	1.70	1.30
Fish Tail 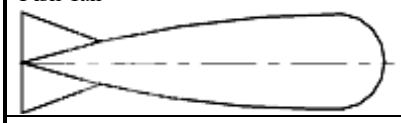	1.40	0.80
Mixed profiles (e.g. HSVA)	1.21	0.90

13.2.3 Rudder Torque

13.2.3.1 Rudder Torque of Type *B* and *C* Rudders

The rudder torque T_R of Type *B* and *C* rudders is to be obtained for ahead and astern conditions, respectively, according to the following formula.

$T_R = F_R r$ (*N-m*)

Where:

F_R: As specified in 13.2.2.1

r: Distance from the centre of the rudder force on the rudder to the centreline of the rudder stock, determined by the following formula

$r = b(\alpha - e)\ (m)$

For the ahead condition, r is not to be less than rmin obtained from the following formula.

$r_{\min} = 0.1b\ (m)$

Where:

b: Mean breadth (m) of rudder determined by the coordinate system in **Fig. 13.2.2-1**

α: To be as follows:

For ahead condition: 0.33

For astern condition: 0.66

e: Balance factor of the rudder obtained from the following formula

$$e = \frac{A_f}{A}$$

Where:

A_f: Portion (m^2) of the rudder plate area situated ahead of the centreline of the rudder stock

A: As specified in **13.2.2.1**

13.2.3.2 Rudder Torque of Type *A*, *D* and *E* Rudders

The rudder torque T_R of Type *A*, *D* and *E* rudders is to be obtained for the ahead and astern conditions, respectively, according to the following formula:

$T_R = T_{R1} + T_{R2}$ (*N-m*)

For the ahead condition, T_R is not to be less than $T_{R\min}$ (*N-m*) obtained from the following formula:

$$T_{R\min} = 0.1F_R\frac{A_1b_1 + A_2b_2}{A}$$

Where:

T_{R1} and T_{R2}: Rudder torque (*N-m*) of portion of A_1 and A_2, respectively.

A_1 and A_2: Areas of respective rectangles (m^2) determined by dividing the rudder area into two parts so that $A = A_1 + A_2$ (A1 and A2 include A_{1f} and A_{2f} respectively), as specified in **Fig. 13.2.3-1**. A_{1f} and A_{2f} are areas situated ahead of the centreline of the rudder stock.

b_1 and b_2: Mean breadth (m) of portions A_1 and A_2 determined by applying **Fig. 13.2.2-1**.

F_R and A: As specified in **13.2.2.1**.

T_{R1} and T_{R2}, the rudder torque of portions A_1 and A_2, are to be obtained from the following formulae.

$T_{R1} = F_{R1}r_1$ (*N-m*)

$T_{R2} = F_{R2}r_2$ (*N-m*)

F_{R1} and F_{R2}, the rudder force of portions A_1 and A_2, are to be obtained from the following formulae.

$$F_{R1} = F_R\frac{A_1}{A}\ (N)$$

$$F_{R2} = F_R\frac{A_2}{A}\ (N)$$

r_1 and r_2, he distances from each centre of rudder force of portions A_1 and A_2 to the centreline of the rudder stock, are to be determined from the following formulae.

$r_1 = b_1(\alpha - e_1)\ (m)$

$r_2 = b_2(\alpha - e_2)\ (m)$

e_1 and e_2, the balance factors of portions A_1 and A_2 respectively are to be obtained from the following formulae.

$$e_1 = \frac{A_{1f}}{A_1}, e_2 = \frac{A_{2f}}{A_2}$$

α is to be as follows:

For parts of a rudder not behind a fixed structure such as rudder horn:

For ahead condition: 0.33

For astern condition: 0.66

For parts of a rudder behind a fixed structure such as the rudder horn:

For ahead condition: 0.25

For astern condition: 0.55

Fig. 13.2.3-1 Division of Rudder

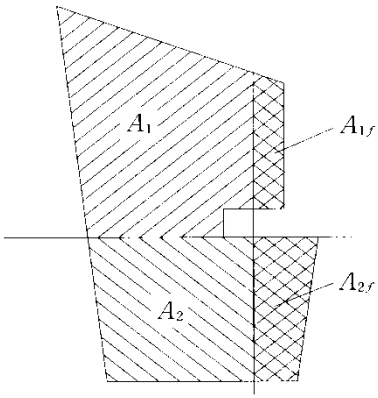

13.2.4 Rudder Strength Calculation

13.2.4.1 Rudder Strength Calculation *

1 Strength of rudder structures is to be sufficient to withstand the rudder force and rudder torque as given in 13.2.2.1 and 13.2.3. When the scantling of each part of a rudder is determined, the following moments and forces are to be considered.

(1) For rudder body: bending moment and shear force

(2) For rudder stock: bending moment and torque

(3) For pintle bearing and rudder stock bearing: supporting force

2 The bending moments, shear forces, and supporting forces to be considered are to be determined by direct calculation or by a simplified approximation method as deemed appropriate by the Society.

13.2.5 Rudder Stocks

13.2.5.1 Upper Stocks*

The diameter d_u of the upper stock, which is the stock above the bearing centre of the rudder carrier required for the transmission of the rudder torque, is to be determined such that torsional stress dose not exceed $68/K_S$ (N/mm^2).

Considering this, the diameter of the upper stock may be determined by the following formula:

$$d_u = 4.2 \cdot \sqrt[3]{T_R K_S} \ (mm)$$

Where:

T_R: As specified in 13.2.3

K_S: Material factor for rudder stock, as given in 13.2.1.2

13.2.5.2 Lower Stocks

The diameter d_l of the lower stock, which is the stock below the bearing centre of the rudder carrier subject to the combined forces of torque and bending moment, is to be determined such that the equivalent stress in the rudder stock does not exceed $118/K_S$ (N/mm^2)

The equivalent stress σ_e is to be obtained from the following formula.

$$\sigma_e = \sqrt{{\sigma_b}^2 + 3{\tau_t}^2} \ (N/mm^2)$$

σ_b and τ_t: The bending stress and torsional stress acting on the lower stock are to be determined as follows:

Bending stress: $\sigma_b = \dfrac{10.2M}{{d_l}^3} \times 10^3$ (N/mm^2)

Torsional stress: $\tau_t = \dfrac{5.1T_R}{{d_l}^3} \times 10^3$ (N/mm^2)

Where:

M: Bending moment (N-m) at the section of rudder stock considered

T_R: As specified in 13.2.3

When the horizontal section of the lower stock forms a circle, the lower stock diameter d_l may be determined by the following formula:

$$d_l = d_u \cdot \sqrt[6]{1 + \frac{4}{3}\left(\frac{M}{T_R}\right)^2} \ (mm)$$

d_u: Diameter of upper stock (mm) as given in 13.2.5.1

For a spade rudder with trunk extending inside the rudder, the rudder stock scantlings are to be checked for the following two cases:

(1) pressure applied on the entire rudder area; and

(2) pressure applied only on rudder area below the middle of the neck bearing.

13.2.6 Rudder Plates, Rudder Frames and Rudder Main Pieces

13.2.6.1 Rudder Plate

The rudder plate thickness t_{gr} is not to be less than that obtained from the following formula. The thickness of rudder plating in way of the solid part is to be increased in accordance with 13.2.7.4.

$$t_{gr} = 5.5S\beta\sqrt{\left(T_{SC} + \frac{F_R \times 10^{-4}}{A}\right)K_{pl}} + 2.5 \ (mm)$$

T_{SC}: Scantling draught (m) (*See* 1.4.3.1-5)

A and F_R: As specified in 13.2.2.1

K_{pl}: Material factor for the rudder plate as given in 13.2.1.2

β: To be obtained from the following formula:

$$\beta = \sqrt{1.1 - 0.5\left(\frac{S}{a}\right)^2},$$

but need not exceed $1.0 \left(\frac{a}{S} \geq 2.5\right)$

Where:

S: Spacing (m) of horizontal or vertical rudder frames, whichever is smaller

a: Spacing (m) of horizontal or vertical rudder frames, whichever is greater

13.2.6.2 Rudder Frames

1 The rudder body is to be stiffened by horizontal and vertical rudder frames enabling it to withstand bending like a girder.

2 The standard spacing of horizontal rudder frames is to be obtained from the following formula:

$$0.2\left(\frac{L}{100}\right) + 0.4 \ (mm)$$

3 The standard distance from the vertical rudder frame forming the rudder main piece to the adjacent vertical frame is to be 1.5 *times* the spacing of horizontal rudder frames.

4 The thickness of rudder frames is not to be less than 8 mm or 70% of the thickness of the rudder plates as given in 13.2.6.1, whichever is greater.

13.2.6.3 Rudder Main Pieces*

1 Vertical rudder frames forming the rudder main piece are to be arranged forward and afterward of the centre line of the rudder stock at a distance approximately equal to the thickness of the rudder if the main piece consists of two rudder frames, or at the centreline of the rudder stock if the main piece consists of one rudder frame.

2 The section modulus of the main piece is to be calculated in conjunction with the vertical rudder frames specified in **-1** above and the rudder plates attached thereto. The breadth of the rudder plates normally taken into calculation are to be as follows:

(1) Where the main piece consists of two rudder frames, the breadth is 0.2 *times* the length of the main piece.

(2) Where the main piece consists of one rudder frame, the breadth is 0.16 *times* the length of the main piece.

3 The section modulus and the web area of horizontal sections of the main piece are to be such that bending stress σ_b, shear stress τ, and equivalent stress σ_e are not to exceed the following values.

(1) In general, except in way of rudder recess sections where **(2)** applies

Bending stress: $\sigma_b = \frac{110}{K_m}$ (N/mm^2)

Shear stress: $\tau = \frac{50}{K_m}$ (N/mm^2)

Equivalent stress: $\sigma_e = \sqrt{{\sigma_b}^2 + 3\tau^2} = \frac{120}{K_m}$ (N/mm^2)

K_m: Material factor for the rudder main piece as given in 13.2.1.2

(2) In way of the recess for the rudder horn pintle on Type *A*, *D* and *E* rudders

Bending stress: $\sigma_b = 75$ (N/mm^2)

Shear stress: $\tau = 50$ (N/mm^2)

Equivalent stress: $\sigma_e = \sqrt{{\sigma_b}^2 + 3\tau^2} = 100$ (N/mm^2)

Note: The stresses in **(2)** apply equally to high tensile and ordinary steels.

4 The upper part of the main piece is to be so constructed as to avoid structural discontinuity.

5 Maintenance openings are to be rounded off properly.

13.2.6.4 Connections*

Rudder plates are to be effectively connected to rudder frames, free from defects, with due attention paid to the workmanship.

13.2.6.5 Painting and Draining

The internal surfaces of rudders are to be coated with effective paint, and a means for draining is to be provided at the bottoms of the rudders.

13.2.7 Connections of Rudder Blade Structure with Solid Parts

13.2.7.1 Solid Part Protrusions

1 Solid parts in forged or cast steel, which house the rudder stock or the pintle, are to be provided with protrusions, except where not required as indicated below.

2 These protrusions are not required when the web plate thickness is less than:

(1) 10 *mm* for web plates welded to the solid part on which the lower pintle of Type *A*, *D* and *E* rudders is housed and for vertical web plates welded to the solid part of the rudder stock coupling of Type *C* rudders.

(2) 20 *mm* for other web plates.

13.2.7.2 Connections of solid part and rudder structures

The solid parts are in general to be connected to the rudder structure by means of two horizontal web plates and two vertical web plates.

13.2.7.3 Minimum Section Modulus of the Connection with the Rudder Stock Housing

1 The section modulus of the cross-section of the structure of the rudder blade (cm^3) formed by vertical web plates and rudder plating, which is connected with the solid part where the rudder stock is housed is to be not less than:

$$c_s {d_l}^3 \left(\frac{H_E - H_X}{H_E}\right)^2 \frac{K_{pl}}{K_S} 10^{-4} \ (cm^3)$$

c_s: Coefficient, to be taken equal to:

$c_s = 1.0$ if there is no opening in the rudder plating or if such openings are closed by a full penetration welded plate

$c_s = 1.5$ if there is an opening in the considered cross-section of the rudder

d_l: Rudder stock diameter (mm) defined in 13.2.5.2

H_E: Vertical distance between the lower edge of the rudder blade and the upper edge of the solid part (m)

H_X: Vertical distance between the considered cross-section and the upper edge of the solid part (m)

K_{pl}: Material factor for the rudder blade plating as given in 13.2.1.2

K_S: Material factor for the rudder stock as given in 13.2.1.2

2 The actual section modulus of the cross-section of the structure of the rudder blade is to be calculated with respect to the symmetrical axis of the rudder. The breadth of the rudder plating (m) to be considered for the calculation of section modulus is to be not greater than:

$$b = s_V + 2\frac{H_X}{3}$$

s_V: spacing between the two vertical webs (m) (*See* Fig. 13.2.7-1)

3 Where openings for access to the rudder stock nut are not closed by a full penetration welded plate, they are to be deducted (*See* Fig. 13.2.7-1).

Fig. 13.2.7-1. Cross-section of the Connection between rudder blade structure and rudder stock housing (in cases where there is an opening on only one side)

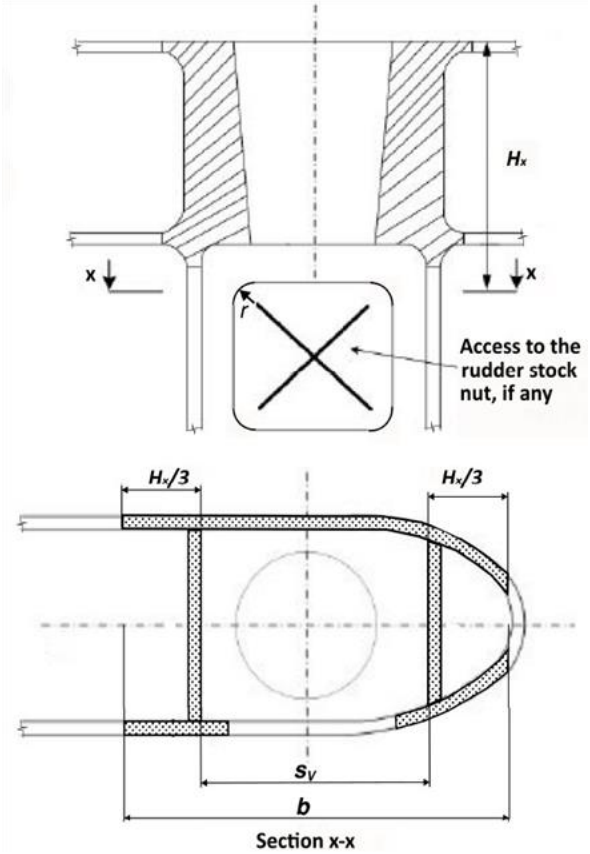

13.2.7.4 Thickness of the Horizontal Web Plates

1 The thickness of the horizontal web plates connected to the solid parts (mm), as well as that of the rudder blade plating between these webs, is to be not less than the greater of the following values:

$t_{H-gr} = 1.2t_{gr}$

$t_{H-gr} = 0.045\frac{{d_s}^2}{s_H}$

t_{gr}: As defined in 13.2.6.1

d_s: Diameter (mm) to be taken equal to:

d_l for the solid part housing the rudder stock

d_p for the solid part housing the pintle

d_l: Rudder stock diameter (mm) defined in 13.2.5.2

d_p: Pintle diameter (mm) defined in 13.2.9.1

s_H: Spacing between the two horizontal web plates (mm)

2 The increased thickness of the horizontal webs is to extend fore and aft of the solid part at least to the next vertical web.

13.2.7.5 Thickness of the Vertical Web Plates

1 The thickness of the vertical web plates welded to the solid part where the rudder stock is housed as well as the thickness of the rudder side plating under this solid part is to be not less than the values obtained (mm) from Table 13.2.7-1.

2 The increased thickness is to extend below the solid piece at least to the next horizontal web.

Table 13.2.7-1. Thickness of Side Plating and Vertical Web Plates

Type of rudder	Thickness of vertical web plates (mm)		Thickness of rudder plating (mm)	
	Rudder blade without opening	Rudder blade with opening	Rudder blade without opening	Area with opening
Type A and B rudders	$1.2t_{gr}$	$1.6t_{gr}$	$1.2t_{gr}$	$1.4t_{gr}$
Type C, D and E rudders	$1.4t_{gr}$	$2.0t_{gr}$	$1.3t_{gr}$	$1.6t_{gr}$
t_{gr}= thickness of the rudder plating, in mm, as defined in 13.2.6.1				

13.2.8 Couplings between Rudder Stocks and Main Pieces

13.2.8.1 Horizontal Flange Couplings*

1 Coupling bolts are to be reamer bolts, and at least 6 reamer bolts are to be used in each coupling.

2 The diameter of coupling bolts d_b is not to be less than the dimension obtained from the following formula:

$$d_b = 0.62\sqrt{\frac{d^3 K_b}{n e_m K_s}}\ (mm)$$

d: Stock diameter (mm), the greater of the diameters d_u or d_l according to 13.2.5.1 and 13.2.5.2

n: Total number of bolts

e_m: Mean distance (mm) of the bolt axes from the centre of the bolt system

K_s: Material factor for the rudder stock as given in 13.2.1.2

K_b: Material factor for the bolts as given in 13.2.1.2

3 The thickness of the coupling flanges t_f is not to be less than that determined by the following formula, provided that the thickness is not less than $0.9d_b$ (mm).

$$t_f = d_b\sqrt{\frac{K_f}{K_b}}\ (mm)$$

Where:

K_f: Material factor for flange as given in 13.2.1.2

K_b: As specified in **-2**

d_b: Bolt diameter (mm), determined by a number of bolts not exceeding 8

4 The width of the material between the perimeter of the bolt holes of the coupling flanges and the perimeter of the flange is not to be less than $0.67d_b$ (mm).

5 The welded joint between the rudder stock and the flange is to be made in accordance with Fig. 13.2.8-1 or equivalent.

6 Coupling bolts are to be fitted bolts and their nuts are to be locked effectively.

Fig. 13.2.8-1 Welded Joint between Rudder Stock and Coupling Flange

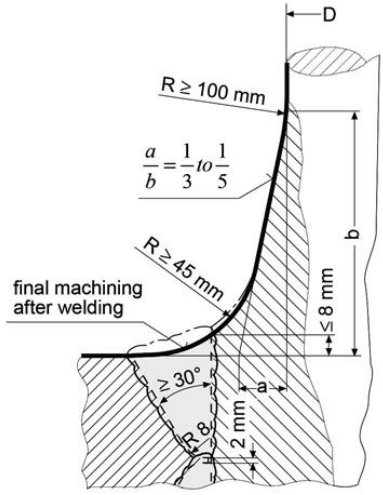

13.2.8.2 Vertical Flange Couplings*

1 Coupling bolts are to be reamer bolts, and at least 8 reamer bolts are to be used in each coupling.

2 The diameter of the coupling bolts d_b is not to be less than the dimension obtained from the following formula.

$$d_b = \frac{0.81d}{\sqrt{n}}\sqrt{\frac{K_b}{K_s}}\ (mm)$$

d: Stock diameter (mm), the greater of the diameters d_u or d_l according to **13.2.5.1** and **13.2.5.2**

n: Number of bolts

K_b: Material factor for bolts as given in **13.2.1.2**

K_s: Material factor for the rudder stock as given in **13.2.1.2**

3 The first moment of area M of the bolts about the centreline of the coupling flange is not to be less than the value obtained from the following formula:

$$M = 0.00043d^3\ (cm^3)$$

4 The thickness of the coupling flanges is to be at least equal to the bolt diameter.

5 The width of the flange material between the perimeter of the bolt holes and the perimeter of the flange is not to be less than $0.67d_b$ (mm).

6 Coupling bolts are to be fitted bolts and their nuts are to be locked effectively.

13.2.8.3 Cone Couplings with Key*

1 Tapering and coupling length is to be in accordance with the following **(1)** to **(3)**.

(1) Cone couplings that are mounted or dismounted without hydraulic arrangements (e.g. oil injection and hydraulic nut) are to have a taper c on diameter of 1:8～1:12. (*See* **Fig. 13.2.8-2** and **Fig. 13.2.8-4**)

Where:

$$c = (d_0 - d_e)/l_c$$

The diameters d_0 and d_e are shown in **Fig. 13.2.8-2** and the cone length l_c is defined in **Fig. 13.2.8-4**.

(2) The cone coupling is to be secured by a slugging nut. The nut is to be secured, e.g. by a securing plate.

(3) The cone shapes are to fit exactly. The coupling length l is to be, in general, not less than$1.5d_0$.

2 Rudder a key is to be in accordance with the following **(1)** to **(2)**.

(1) For couplings between stock and rudder a key is to be provided, the shear area of which is not to be less than:

$$a_s = \frac{17.55M_Y}{d_k\sigma_{Y1}}\ (cm^2)$$

M_Y: Design yield moment of rudder stock (*N-m*), according to the following formula

$$M_Y = 0.02664\frac{{d_u}^3}{K_S}$$

d_u: Stock diameter (mm) according to **13.2.5.1**. Where the actual diameter d_{ua} is greater than the calculated diameter d_u, the diameter d_{ua} is to be used. However, dua applied to the above formula need not be taken greater than 1.145 d_u.

K_S: Material factor for rudder stock

d_k: Mean diameter of the conical part of the rudder stock (mm) at the key

σ_{Y1}: Specified minimum yield stress of the key material (N/mm^2)

(2) The effective surface area (cm^2) of the key (without rounded edges) between key and rudder stock or cone coupling is not to be less than:

$$a_k = \frac{5M_Y}{d_k\sigma_{Y2}}\ (cm^2)$$

σ_{Y2}: Specified minimum yield stress of the key, stock or coupling material (N/mm^2) whichever is less.

3 The dimensions of the slugging nut as specified in **-1** are to be as follows (*See* **Fig. 13.2.8-2**):

External thread diameter: $d_g \geq 0.65d_0$ (mm)

Height: $h_n \geq 0.6d_g$ (mm)

Outer diameter: $d_n \geq 1.2d_e$ or $1.5d_g$ (mm), whichever is greater

4 It is to be proved that 50% of the design yield moment is solely transmitted by friction in the cone couplings. This can be done by calculating the required push-up pressure and push-up length according to **13.2.8.4-2** and **-3** for a torsional moment $M_Y' = 0.5M_Y$.

5 Notwithstanding the requirements in **-2** and **-4** above, where a key is fitted to the coupling between stock and rudder, and it is considered that the entire rudder torque is transmitted by the key at the couplings, the scantlings of the key as well as the push-up force and push-up length are to be at the discretion of the Society.

6 The nuts fixing the rudder stocks are to be provided with efficient locking devices.

7 Couplings of rudder stocks are to be properly protected from corrosion.

Fig. 13.2.8-2 Cone Coupling with Key

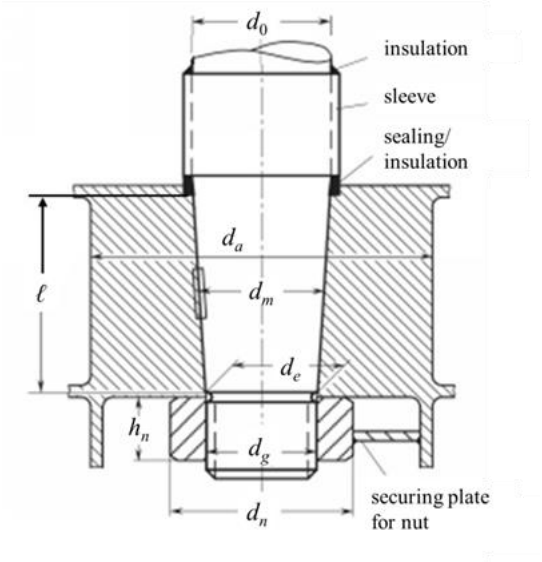

Fig. 13.2.8-3 Gudgeon Outer Diameter

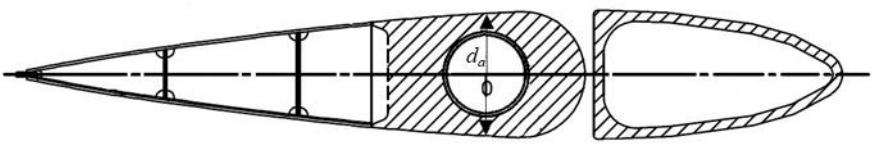

Fig. 13.2.8-4 Cone Length and Coupling Length

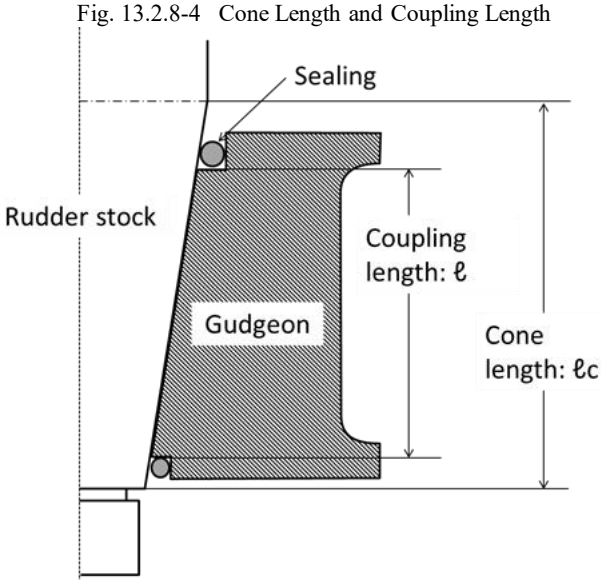

Fig. 13.2.8-5 Cone Coupling without Key

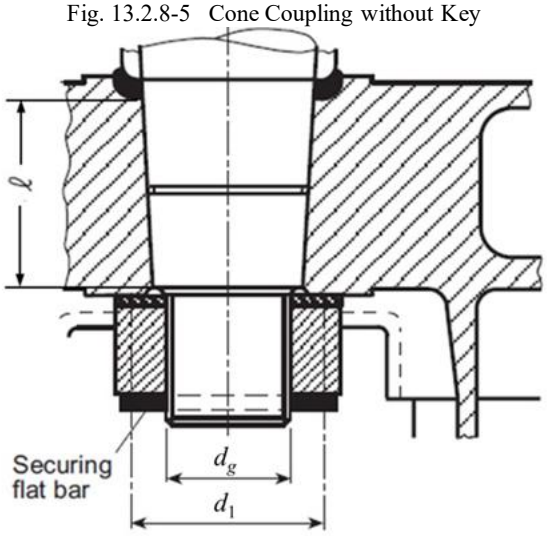

13.2.8.4 Cone Couplings with Special Arrangements for Mounting and Dismounting the Couplings

1 The connection of cone couplings with special arrangements for mounting and dismounting the couplings is to be in accordance with the following **(1)** to **(3)**.

(1) Where the stock diameter exceeds 200 *mm*, the press fit is recommended to be effected by a hydraulic pressure connection. In such cases the cone is to be more slender, c ≈1:12 to ≈1:20.

(2) n case of hydraulic pressure connections the nut is to be effectively secured against the rudder stock or the pintle.

(3) For the safe transmission of the torsional moment by the coupling between rudder stock and rudder body the push-up pressure and the push-up length are to be determined according to **-2** and **-3** respectively.

2 Push-up pressure is to comply with the following requirements.

(1) The push-up pressure is not to be less than the greater of the two following values:

$$p_{req1} = \frac{2M_Y}{d_m{}^2 l\pi\mu_0} \times 10^3 \ (N/mm^2)$$

$$p_{req2} = \frac{6M_c}{l^2 d_m} \times 10^3 \ (N/mm^2)$$

Where:

M_Y: Design yield moment of rudder stock, as defined in **13.2.8.3-2**. (*N-m*)

d_m: Mean cone diameter (*mm*) (*See* **Fig. 13.2.8-2**)

l: Coupling length (*mm*)

μ_0: Frictional coefficient, equal to 0.15

M_c: Bending moment in rudder stock at the top of the cone coupling (e.g. in case of spade rudders) (*N-m*)

For spade rudder with trunk extending inside the rudder, the coupling is to be checked for the following two cases:

(1) pressure applied on the entire rudder area; and

(2) pressure applied only on rudder area below the middle of the neck bearing.

(2) It has to be proved by the designer that the push-up pressure does not exceed the permissible surface pressure in the cone. The permissible surface pressure is to be determined by the following formula:

$$p_{perm} = \frac{0.95\sigma_Y(1-\alpha^2)}{\sqrt{3+\alpha^4}} - p_b$$

$$p_b = \frac{3.5M_c}{d_m l^2} \times 10^3$$

σ_Y: Specified minimum yield stress (N/mm^2) of the material of the gudgeon

$$\alpha = \frac{d_m}{d_a}$$

d_m: Mean cone diameter (*mm*) (*See* **Fig. 13.2.8-2**)

d_a: Outer diameter of the gudgeon (*mm*) (*See* **Fig. 13.2.8-2** and **Fig. 13.2.8-3**. The least diameter is to be considered.) The outer diameter of gudgeon d_a is recommended to be taken at the same plane in which the mean cone diameter d_m.

(3) The outer diameter of the gudgeon is not to be less than 1.25 d_0 (mm), with d0 defined in Fig. 13.2.8-2

3 The push-up length is to comply with the following requirements.

(1) The push-up length Δl (mm) is to comply with the following formula:

$$\Delta l_1 \leq \Delta l \leq \Delta l_2$$

$$\Delta l_1 = \frac{p_{req} d_m}{E\left(\frac{1-\alpha^2}{2}\right)c} + \frac{0.8R_{tm}}{c} \ (mm)$$

$$\Delta l_2 = \frac{p_{perm} d_m}{E\left(\frac{1-\alpha^2}{2}\right)c} + \frac{0.8R_{tm}}{c} \ (mm)$$

R_{tm}: Mean roughness (mm) taken equal to about 0.01 mm

c: Taper on diameter according to 13.2.8.3-1

E: Young's modulus (N/mm^2), to be taken as 2.06×10^5

(2) In case of hydraulic pressure connections the required push-up force P_e for the cone (N) may be determined by the following formula:

$$P_e = p_{req} d_m \pi l \left(\frac{c}{2} + 0.02\right)$$

The value 0.02 is a reference for the friction coefficient using oil pressure. It varies and depends on the mechanical treatment and roughness of the details to be fixed. Where due to the fitting procedure a partial push-up effect caused by the rudder weight is given, this may be taken into account when fixing the required push-up length, subject to approval by the Society.

13.2.9 Pintles

13.2.9.1 Diameter of Pintles

The diameter of pintles d_p is not to be less than the dimension obtained from the following formula.

$$d_p = 0.35\sqrt{BK_p} \ (mm)$$

B: Reaction force in bearing (N)

K_p: Material factor for pintles as given in 13.2.1.2

13.2.9.2 Construction of Pintles*

1 Pintles are to be constructed as taper bolts with a taper on the diameter not exceeding the following values, and capable of being fitted to the cast parts of the rudders. The nuts fixing the pintles are to be provided with efficient locking devices.

(1) For pintles to be assembled and locked with slugging nuts: 1:8～1:12

(2) For pintles mounted with hydraulic arrangements (oil injection and hydraulic nut, etc.): 1:12～1:20

2 The required push-up pressure for pintle in case of dry fitting (N/mm^2) is to be determined by p_{req1} as given below. The required push-up pressure for pintle in case of oil injection fitting (N/mm^2) is to be determined by the maximum pressures of p_{req1} and p_{req2} as given below. The required push up length Δl_1 is to be calculated similarly as in 13.2.8.4-3, using the required push-up pressure (as defined below) and properties for the pintle.

$$p_{req1} = 0.4\frac{B\,d_0}{{d_m}^2 l} \ (N/mm^2)$$

$$p_{req2} = \frac{6M_{bp}}{l^2 d_m} \times 10^3 \ (N/mm^2)$$

B: As defined in 13.2.9.1

d_m, l: As defined in 13.2.8.4-2

d_0: Pintle diameter (mm) (*See* Fig. 13.2.8-2)

M_{bp}: bending moment in the pintle cone coupling $(N\text{-}m)$ to be determined as follows

$$M_{bp} = B\ell_a$$

ℓ_a: length between middle of pintle-bearing and top of contact surface between cone coupling and pintle (m) (*See* Fig. 13.2.9-1)

3 The minimum dimensions of the threads and the nuts of pintles are to be determined by applying the requirements in 13.2.8.3-3 correspondingly.

4 The taper length of the pintle is not to be less than the maximum actual diameter of the pintle.

5 Pintles are to be properly protected from corrosion.

Fig. 13.2.9-1 Pintle Cone Coupling Indicating ℓ_a

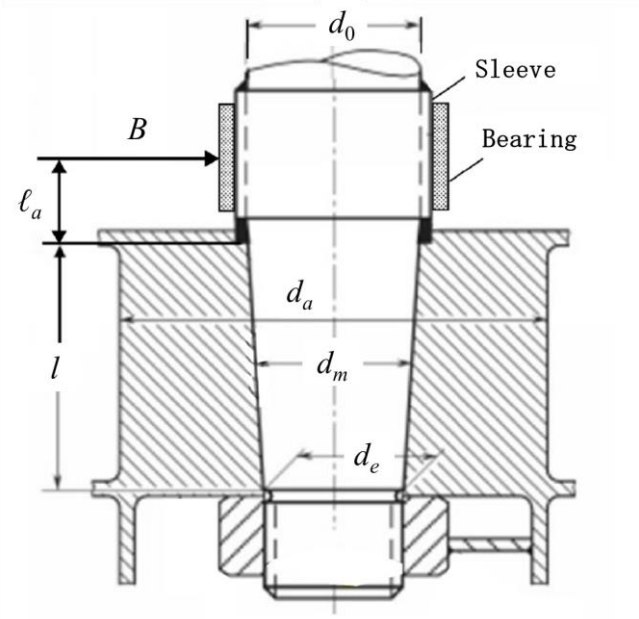

13.2.10 Bearings of Rudder Stocks and Pintles

13.2.10.1 Sleeves and Bushes

1 Sleeves and bushes are to be fitted in way of rudder stock bearing. For rudder stocks and pintles having diameter less than 200 *mm*, sleeves in way of bushes may be provided optionally. The minimum thickness of sleeves and bushes is to be equal to:

(1) $t_{\min} = 8\ mm$ for metallic materials and synthetic material

(2) $t_{\min} = 22\ mm$ for lignum material

2 Sleeves and bushes are to be fitted in way of pintle bearings. The minimum thickness of sleeves and bushes is to be equal to:

$t = 0.01\sqrt{B}\ (mm)$

B: As specified in **13.2.9.1**

13.2.10.2 Minimum Bearing Surface*

The bearing surface A_b (defined as the projected area: length × outside diameter of sleeve) is not to be less than the value obtained from the following formula.

$$A_b = \frac{B}{q_a}(mm^2)$$

Where:

B: As specified in **13.2.9.1**

q_a: Allowable surface pressure (N/mm^2)

The allowable surface pressure for the various bearing combinations is to be taken from **Table 13.2.10-1**. When verified by tests, however, values different from those in this Table may be taken.

13.2.10.3 Bearing Dimensions

1 The length/diameter ratio of the bearing surface is not to be greater than 1.2.

2 The bearing length L_p of the pintle is to be such that

$d_{p0} \le L_p \le 1.2 d_{p0}$

Where:

d_{p0}: As specified in **11.5.1.7**

13.2.10.4 Bearing Clearances*

1 With metal bearings, clearances are not to be less than $d_{bs}/1000 + 1.0\ (mm)$ on the diameter.

d_{bs} is the inner diameter of the bush.

2 If non-metallic bearing material is used, the bearing clearance is to be specially determined considering the material's swelling and thermal expansion properties. This clearance is not to be taken as less than 1.5 *mm* on the bearing diameter unless a smaller clearance is supported by the manufacturer's recommendation and there is documented evidence of satisfactory service history with a

reduced clearance.

Table 13.2.10-1. Allowable Surface Pressure q_a

Bearing material	q_a (N/mm^2)
Lignum vitae	2.5
White metal (oil-lubricated)	4.5
Synthetic material with hardness greater than 60 Shore D[1)]	5.5[2)]
Steel[3)], bronze and hotpressed bronze graphite materials	7.0

Notes:

1: Indentation hardness test at the temperature of 23°C and the humidity of 50%, is to be carried out according to a recognized standard. Synthetic bearings are to be of the type as deemed appropriate by the Society.

2: Surface pressures exceeding 5.5 N/mm^2 may be accepted in accordance with bearing manufacturer's specification and tests, but in no case more than 10 N/mm^2.

3: Stainless and wear-resistant steel in an approved combination with a stock liner.

13.2.11 Rudder Accessories

13.2.11.1 Rudder Carriers*

1 Suitable rudder carriers are to be provided according to the form and the weight of the rudder, and care is to be taken to provide efficient lubrication at the support.

2 In rudder trunks which are open to the sea, a seal or stuffing box is to be fitted above the deepest load waterline to prevent water from entering the steering gear compartment and the lubricant from being washed away from the rudder carrier. If the top of the rudder trunk is below the waterline at scantling draught (without trim), two separate watertight seals or stuffing boxes are to be provided.

13.2.11.2 Prevention of Jumping*

A suitable arrangement is to be provided to prevent the rudder from jumping due to wave shocks.

Chapter 14 EQUIPMENT

14.1 General

14.1.1 Overview

14.1.1.1

1 This Chapter provides the requirements for equipment shown in **Table 14.1.1-1**.

Table 14.1.1-1 Overview of Chapter 14

Section	Subject	Overview
14.1	General	Overview of this Chapter
14.2	Ship Identification Number	Requirements for marking of ship identification numbers
14.3	Anchors and Chain Cables	Requirements for anchors and chain cables
14.4	Towing and Mooring Arrangement	Requirements for towing and mooring arrangement
14.5	Equipment Numbers and Emergency Towing Arrangements	Requirements for equipment numbers and emergency towing arrangements
14.6	Hatch Covers	Requirements for hatch covers
14.7	Small Hatch Opening	Requirements for Small Hatch Opening
14.8	Bulwarks and Guardrails	Requirements for bulwarks and guardrails
14.9	Freeing Arrangements	Requirements for freeing arrangements
14.10	Doors	Requirements for bow doors, inner doors, side shell doors and stern doors
14.11	Side Scuttles and Rectangular Windows	Requirements for side scuttles and rectangular windows
14.12	Ventilators	Requirements for ventilators
14.13	Gangways	Requirements for gangways
14.14	Means of Embarkation and Disembarkation	Requirements for embarkation and disembarkation
14.15	(Void)	(Void)
14.16	Means of Access	Requirements for means of access
Annex 14.16	Guidance for Decision of Alternative Means of Access	Guidance for decision of alternative means of access

2 Masts and riggings, cargo handling, mooring and anchoring arrangements and other fittings for which there are no particular requirements in this Part are to be of appropriate construction and arrangement suitable for their respective purposes, and tests are to be carried out to the satisfaction of the Surveyor, where deemed necessary.

14.2 Ship Identification Number

14.2.1 General

14.2.1.1 Marking of Ship Identification Numbers

For cargo ships not less than 300 gross tonnage engaged on international voyages, the ship's identification number is to be permanently marked as follows. "Ship Identification Number" refers to the number which conforms to the *IMO* ship identification number scheme adopted by *IMO* Resolution *A.600(15)*.

(1) In a visible place either on the stern of the ship or on either side of the hull, amidships port and starboard, above the deepest assigned load line or either side of the superstructure etc. (e.g. superstructures, bridges or deckhouses), port and starboard or on the front of the superstructure etc. (e.g. superstructures, bridges or deckhouses).

(2) In an easily accessible place either on one of the end transverse bulkheads of the machinery spaces, as defined in **2.1.33, Part A**, or on one of the hatchways or, in the case of tankers, in the pump room or, in the case of ships with ro-ro spaces, as defined in regulation **3.2.41**, **Part R**, on one of the end transverse bulkheads of the ro-ro spaces.

14.2.1.2 Marking Method

The ship's identification number is to be marked as follows.

(1) The permanent marking is to be plainly visible, clear of any other markings on the hull and is to be painted in a colour contrasting with the surroundings.

(2) The permanent marking referred to in **14.2.1.1(1)** is to be not less than 200 *mm* in height and the permanent marking referred to in **14.2.1.1(2)** is to be not less than 100 *mm* in height. The width of the marks is to be proportionate to the height.

(3) The permanent marking may be made by raised lettering or by cutting it in or by centre punching it or by any other equivalent method of marking, and may be ensured that the marking is not easily expunged. In this case, the strength of the ship's construction is not to be affected by the method of marking.

14.3 Anchors and Chain Cables

14.3.1 Anchoring Equipment

14.3.1.1 General*

1 All ships are to be provided with anchors and chain cables specified in **14.3**. All ships are to be provided with suitable appliances for handling anchors and lines, complied with **Chapter 16, Part D**.

2 Anchors and chain cables for ships having equipment numbers more than 16,000 are to be as determined by the Society.

3 The anchoring equipment subject to the requirements specified in this Chapter is based on the following conditions of intended use. The Society, however, may require special consideration be given to anchoring equipment intended for use in deep and unsheltered waters.

(1) The anchoring equipment required herewith is intended for temporary mooring of a ship within a harbour or sheltered area when the ship is awaiting berth, tide, etc. The equipment is, therefore, not designed to hold a ship off fully exposed coasts in rough weather or to stop a ship which is moving or drifting.

(2) The anchoring equipment required herewith is designed to hold a ship in good holding ground conditions so as to avoid dragging of the anchor. In poor holding ground conditions, the holding power of the anchors is significantly reduced.

(3) Anchoring equipment is used under the environmental condition that an assumed maximum current speed of 2.5 *m/s*, a maximum wind speed of 25 *m/s* and a minimum scope of chain cable of 6, the scope being the ratio between the paid-out length of the chain and water depth. However, for ships with a ship length L_2 (as defined in **14.5.1.1(3)**) greater than 135 *m*, the required anchoring equipment may alternatively be considered applicable to a maximum current speed of 1.54 *m/s*, a maximum wind speed of 11 *m/s* and waves with maximum significant height of 2 *m*.

(4) It is assumed that under normal circumstances a ship uses only one bow anchor and chain cable at a time.

4 "Sheltered waters" referred to in **-3** above, means water area specified in **3.5.2, Section 4, Chapter 1, Part 1, Part CSR-B&T**.

14.3.1.2 Anchors

1 All ships are to be provided with the anchors which are not less than that given in **Table 14.3.1-1** according to their equipment number specified in **14.5**.

2 Two of the anchors given in **Table 14.3.1-1** are to be connected to their cables and be positioned on board ready for use.

3 Anchors are to comply with the requirements in **Chapter 2, Part L**.

4 The mass of individual anchors may vary by ±7 % of the mass given in **Table 14.5.1**, provided that the total mass of anchors is not less than that obtained from multiplying the mass per anchor given in the table by the number installed on board. However, where approval by the Society is obtained, anchors which are increased in mass by more than 7 % may be used.

5 Where stocked anchors are used, the mass, excluding the stock, is not to be less than 0.80 times the mass shown in the table for ordinary stockless anchors.

6 Where high holding power anchors are used, the mass of each anchor may be 0.75 *times* the mass shown in the table for ordinary stockless anchors.

7 Where super high holding power anchors are used, the mass of each anchor may be 0.5 *times* the mass required for ordinary stockless anchors. However, super high holding power anchor mass is not to exceed 1,500 *kg*.

14.3.1.3 Chain Cables

1 All ships are to be provided with chain cables which are not less than that given in **Table 14.3.1-1**. according to their equipment number specified in **14.5**.

2 Chain cables for anchors are to be stud link chains of Grade 1, 2 or 3, as specified in **3.1 of Chapter 3, Part L**. However, Grade 1 chains made of Class 1 chain bars (*KSBC*31) specified in **Chapter 3, Part L**, are not to be used in association with high holding power anchors.

14.3.1.4 Chain Lockers

1 Chain lockers are to be of capacities and depths adequate to provide an easy direct lead of the cables through the chain pipes and a self-stowing of the cables.

2 Chain lockers including spurling pipes are to be watertight up to the weather deck and to be provided with a means for drainage.

3 Chain lockers are to be subdivided by centre line screen walls.

4 Where a means of access is provided, it is to be closed by a substantial cover and secured by closely spaced bolts.

5 Where a means of access to spurling pipes or cable lockers is located below the weather deck, the access cover and its securing arrangements are to be in accordance with *JIS* F 2304, *JIS* F 2329 or *ISO* 5894 or their equivalent. Butterfly nuts and/or hinged bolts are prohibited as the securing mechanism for the access cover.

6 Spurling pipes through which anchor cables are led are to be provided with permanently attached closing appliances to minimize water ingress.

7 The inboard ends of the chain cables are to be secured to the structures by fasteners able to withstand a force not less than 15% and not more than 30% breaking load of the chain cable.

8 Fasteners are to be provided with a means suitable to permit, in case of emergency, an easy slipping of chain cables to the sea, operable from an accessible position outside the chain locker.

14.3.1.5 Supporting Hull Structures of Anchor Windlasses and Chain Stoppers

1 The supporting hull structures of anchor windlasses and chain stoppers are to be sufficient to accommodate operating loads and sea loads.

(1) Operating loads are to be taken as not less than the following **(a)** to **(c)**.

(a) For chain stoppers, 80% of the chain cable breaking load

(b) For windlasses, where no chain stopper is fitted or a chain stopper is attached to the windlass, 80% of the chain cable breaking load

(c) For windlasses, where chain stoppers are fitted but not attached to the windlass, 45% of the chain cable breaking load

(2) Sea loads are to be taken according to **2.1.6, Section 4, Chapter 11, Part 1, Part CSR-B&T**

2 The permissible stresses for supporting hull structures of windlasses and chain stoppers are not to be greater than the following permissible values:

(1) For strength assessments using beam theory or grillage analysis:

(a) Normal stress : 100% of the specified minimum yield point of the material

(b) Shear stress : 60% of the specified minimum yield point of the material

(2) For strength assessments using finite element analysis:

(a) Von Mises stress: : 100% of the specified minimum yield point of the material

(3) "Normal stress" referred to in **(1)** above is the sum of bending stress and axial stress with the corresponding shearing stress acting perpendicular to the normal stress. No stress concentration factors being are to be considered.

3 For strength assessments of supporting hull structures, beam theory or finite element analysis using net scantlings is to be applied as appropriate. Where finite element analysis is used, the requirements of **14.4.2.2-4** are to be applied.

4 The corrosion additions of supporting hull structures are to be in accordance with the requirements in **14.4.1.2**.

Table 14.3.1-1 Anchors, Chain Cables and Ropes

Equipment letter	Equipment Number		Anchor		Chain cable for anchor (Stud anchor for chain)				Tow line	
			Number	Mass per anchor (stockless anchor))	Total length	Diameter			Length	Breaking load
						Grade 1	Grade 2	Grade 3		
	Over	Up to		*kg*	*m*	*mm*	*mm*	*mm*	*m*	*kN*
A1	50	70	2	180	220	14	12.5		180	98
A2	70	90	2	240	220	16	14		180	98
A3	90	110	2	300	247.5	17.5	16		180	98
A4	110	130	2	360	247.5	19	17.5		180	98
A5	130	150	2	420	275	20.5	17.5		180	98
B1	150	175	2	480	275	22	19		180	98
B2	175	205	2	570	302.5	24	20.5		180	112
B3	205	240	2	660	302.5	26	22	20.5	180	129
B4	240	280	2	780	330	28	24	22	180	150
B5	280	320	2	900	357.5	30	26	24	180	174
C1	320	360	2	1020	357.5	32	28	24	180	207
C2	360	400	2	1140	385	34	30	26	180	224
C3	400	450	2	1290	385	36	32	28	180	250
C4	450	500	2	1440	412.5	38	34	30	180	277
C5	500	550	2	1590	412.5	40	34	30	190	306
D1	550	600	2	1740	440	42	36	32	190	338
D2	600	660	2	1920	440	44	38	34	190	370
D3	660	720	2	2100	440	46	40	36	190	406
D4	720	780	2	2280	467.5	48	42	36	190	441
D5	780	840	2	2460	467.5	50	44	38	190	479
E1	840	910	2	2640	467.5	52	46	40	190	518
E2	910	980	2	2850	495	54	48	42	190	559
E3	980	1060	2	3060	495	56	50	44	200	603
E4	1060	1140	2	3300	495	58	50	46	200	647
E5	1140	1220	2	3540	522.5	60	52	46	200	691
F1	1220	1300	2	3780	522.5	62	54	48	200	738
F2	1300	1390	2	4050	522.5	64	56	50	200	786
F3	1390	1480	2	4320	550	66	58	50	200	836
F4	1480	1570	2	4590	550	68	60	52	220	888
F5	1570	1670	2	4890	550	70	62	54	220	941
G1	1670	1790	2	5250	577.5	73	64	56	220	1024
G2	1790	1930	2	5610	577.5	76	66	58	220	1109

Equipment letter	Equipment Number		Anchor		Chain cable for anchor (Stud anchor for chain)				Tow line	
			Number	Mass per anchor (stockless anchor))	Total length	Diameter			Length	Breaking load
						Grade 1	Grade 2	Grade 3		
	Over	Up to		*kg*	*m*	*mm*	*mm*	*mm*	*m*	*kN*
G3	1930	2080	2	6000	577.5	78	68	60	220	1168
G4	2080	2230	2	6450	605	81	70	62	240	1259
G5	2230	2380	2	6900	605	84	73	64	240	1356
H1	2380	2530	2	7350	605	87	76	66	240	1453
H2	2530	2700	2	7800	632.5	90	78	68	260	1471
H3	2700	2870	2	8300	632.5	92	81	70	260	1471
H4	2870	3040	2	8700	632.5	95	84	73	260	1471
H5	3040	3210	2	9300	660	97	84	76	280	1471
J1	3210	3400	2	9900	660	100	87	78	280	1471
J2	3400	3600	2	10500	660	102	90	78	280	1471
J3	3600	3800	2	11100	687.5	105	92	81	300	1471
J4	3800	4000	2	11700	687.5	107	95	84	300	1471
J5	4000	4200	2	12300	687.5	111	97	87	300	1471
K1	4200	4400	2	12900	715	114	100	87	300	1471
K2	4400	4600	2	13500	715	117	102	90	300	1471
K3	4600	4800	2	14100	715	120	105	92	300	1471
K4	4800	5000	2	14700	742.5	122	107	95	300	1471
K5	5000	5200	2	15400	742.5	124	111	97	300	1471
L1	5200	5500	2	16100	742.5	127	111	97	300	1471
L2	5500	5800	2	16900	742.5	130	114	100	300	1471
L3	5800	6100	2	17800	742.5	132	117	102	300	1471
L4	6100	6500	2	18800	742.5		120	107	300	1471
L5	6500	6900	2	20000	770		124	111	300	1471
M1	6900	7400	2	21500	770		127	114	300	1471
M2	7400	7900	2	23000	770		132	117	300	1471
M3	7900	8400	2	24500	770		137	122	300	1471
M4	8400	8900	2	26000	770		142	127	300	1471
M5	8900	9400	2	27500	770		147	132	300	1471
N1	9400	10000	2	29000	770		152	132	300	1471
N2	10000	10700	2	31000	770			137	300	1471
N3	10700	11500	2	33000	770			142	300	1471
N4	11500	12400	2	35500	770			147	300	1471
N5	12400	13400	2	38500	770			152	300	1471
O1	13400	14600	2	42000	770			157	300	1471
O2	14600	16000	2	46000	770			162	300	1471

Notes:

1. Length of chain cables may include shackles for connection.
2. Tow line is not a condition of Classification, but is listed in this table only for guidance. (See **14.4.2.1**)

14.4 Towing and Mooring Arrangement

14.4.1 General

14.4.1.1 Applications and Definitions*

1 The requirements in **14.4** apply to shipboard fittings used for towing and mooring operations associated with the normal operation of the ship, and their supporting hull structures.

2 Ships are to be adequately provided with shipboard fittings which are selected from industry standards deemed appropriate by the Society. The "shipboard fittings" referred to in **14.4** are bollards, bitts, fairleads, stand rollers, chocks used for normal mooring of the ship and other similar components used for normal or other towing of the ship. Other components such as capstans, winches, etc. are not included. Any welds, bolts or equivalent devices connecting shipboard fittings to their supporting structures are considered to be part of the shipboard fitting if selected in accordance with industry standards deemed appropriate by the Society.

3 Shipboard fittings not selected from industry standards deemed appropriate by the Society are to be considered for the corrosion additions and wear allowances specified in **14.4.1.2** and **14.4.1.3** respectively.

4 The strength of supporting hull structures is to be evaluated based on net scantling calculation. The scantlings of supporting hull structures are to be not less than the value obtained by adding the corrosion additions specified in **14.4.1.2** to the required net thickness.

5 The scantlings of the supporting hull structure are to be in accordance with the relevant Parts and Chapters in addition to **14.4**.

6 "Industry standards deemed appropriate by the Society" as prescribed in 14.4, means international standards or national standards such as *ISO*, *DIN* and *JIS F*, etc., but not limited to them.

7 The definitions of terms which appear in **14.4** are as follows

(1) Maximum towing load

"Maximum towing load" is the largest load that can be assumed or intended in normal towing such as static bollard pull

(2) Safe Towing Load (*TOW*)

"Safe Towing Load" (*TOW*) is the safe load limit of shipboard fittings used for towing purpose. However, it does not represent the actual strength of shipboard fittings and their supporting hull structures

(3) Safe Working Load (*SWL*)

"Safe Working Load" (*SWL*) is the safe load limit of shipboard fittings used for mooring purpose. However, it does not represent the actual strength of shipboard fittings and their supporting hull structures

(4) Line Design Break Force (*LDBF*)

"Line Design Break Force" (*LDBF*) is the minimum force that a new, dry, spliced, mooring line will break at. This is for all synthetic cordage materials.

(5) Ship Design Minimum Breaking Load (MBL_{sd})

"Ship Design Minimum Breaking Load" (MBL_{sd}) is the minimum breaking load of new, dry mooring lines or tow lines for which shipboard fittings and supporting hull structures are designed in order to meet mooring restraint requirements or the towing requirements of other towing services.

(6) Ships intended to be regularly moored to jetty-type piers

"The ship is intended to be regularly moored to jetty-type piers" means oil tankers, chemical tankers or gas carriers which are assumed to be moored to jetty-type piers.

(7) Breast lines, head lines, stern lines and spring lines are defined as follows. (*See* **Fig. 14.4.1-1**)

(a) Breast line: A mooring line that is deployed perpendicular to the ship, restraining the ship in the off-berth direction.

(b) Spring line: A mooring line that is deployed almost parallel to the ship, restraining the ship in fore or aft direction.

(c) Head/Stern line: A mooring line that is oriented between the longitudinal and transverse directions, restraining the ship in the off-berth and in the fore or aft directions. The amount of restraint in the fore or aft and off-berth directions depends on the line angle relative to these directions.

(8) Maximum wind speed v_W and acceptable wind speed $v_W{}^*$

The maximum wind speed v_W and acceptable wind speed $v_W{}^*$ is considered representative of a 30 second mean speed from any direction and at a height of 10 *m* above the ground.

(9) Current speed for maximum current speed

The current speed is considered representative of the maximum current speed acting on bow or stern (±10°) and at a depth of one-half of the mean draft. Furthermore, it is considered that ships are moored to solid piers that provide shielding against cross currents.

(10) Ship nominal capacity condition

"Ship nominal capacity condition" is the theoretical condition in which the maximum possible amount of deck cargoes (in their respective positions) is included in the ship arrangement. For container ships, the nominal capacity condition represents the theoretical condition in which the maximum possible number of containers (in their respective positions) is included in the ship arrangement.

(11) Supporting hull structure

Supporting hull structures are the parts of the ship structure on or in which shipboard fittings are attached and which are directly subjected to the forces acting on such fittings.

(12) Sheltered waters

"Sheltered waters" means water area specified in **3.5.2, Section 4, Chapter 1, Part 1, Part CSR-B&T**.

(13) Towing

For the application of this section, towing means the towing operations specified in the following **(a)** and **(b)** but not including **(c)**.

(a) Normal towing: towing operations necessary for manoeuvring in ports and sheltered waters associated with the normal operation of the ship

(b) Other towing: emergency towing by other vessels or tugs, other than those specified in **14.5.2**.

(c) Towing not covered by **14.4**

i) Escort towing: Towing service, in particular, for laden oil tankers or LNG carriers, required in specific estuaries. Its main purpose is to control the ship in case of failures of propulsion or steering systems.

ii) Canal transit towing: Towing service for ships transiting canals

iii) Emergency towing for tankers: Towing service to assist tankers in the cases of emergency referred to in **14.5.2**.

(14) Mooring area

"Mooring area" refers to the dedicated area on a ship where mooring equipment is installed and line-handling takes place. It also includes areas where there is a risk of personnel injury in event of snap-back or other failure of mooring equipment.

(15) Working Load Limit (*WLL*)

"Working Load Limit (*WLL*)" means the maximum load that a mooring line should be subjected to in operational service, calculated from the relevant environmental mooring restraint requirement.

(16) Bend radius (*D*/*d* ratio)

"Bend radius (*D*/*d* ratio)" means the diameter (*D*) of a mooring fitting divided by the diameter (*d*) of a mooring line that is led around or through the fitting.

Fig. 14.4.1-1 Sample Arrangement of Mooring Lines

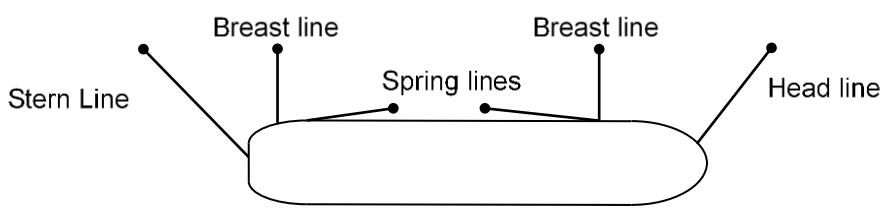

14.4.1.2 Corrosion Additions

Corrosion additions are to be added to the scantlings of the supporting hull structures and shipboard fittings following **(1)** to **(3)**. However, if the shipboard fittings are selected from industry standards deemed appropriate by the Society and the corrosion additions are considered in the standard, following **(1)** to **(3)** may not be applied.

(1) Supporting hull structures: As specified in **3.3.4**. For ships which are subject to **Part CSR-B&T**, the corrosion additions specified in **Section 3, Chapter 3, Part 1, Part CSR-B&T** are to be applied.

(2) Pedestals and foundations on deck which are not a part of a fitting according to an industry standard deemed appropriate by the Society: 2.0 mm

(3) Shipboard fittings not selected from industry standards deemed appropriate by the Society: 2.0 mm

14.4.1.3 Wear Allowances

In addition to the corrosion additions referred to in **14.4.1.2**, the wear allowances for shipboard fittings not selected from industry standards deemed appropriate by the Society are not to be less than 1.0 mm, added to surfaces which are intended to regularly contact the line.

14.4.1.4 Towing and Mooring Fitting Arrangements Plan

1 The SWL and TOW for the intended use for each shipboard fitting is to be noted in the towing and mooring arrangements plan available on board for the Master. If not otherwise chosen, TOW is to be the load limit for a tow line attached with eye-splice.

2 Information provided on the plan is to include the following.

(1) Industry standard and referenced number of each towing and mooring fittings

(2) For each towing and mooring fitting, the location on the ship, the purpose (mooring, normal towing, other towing etc.), the SWL and/or TOW as well as the manner of applying towing or mooring line loads including limiting fleet angles.

(3) An arrangement of mooring lines showing the number of lines (*See* **Fig. 14.4.1-1**)

(4) The Ship Design Breaking Load (MBL_{sd})

(5) The acceptable environmental conditions for ships with equipment numbers greater than 2,000 (EN > 2,000);

(a) Maximum wind speed v_W or acceptable wind speed $v_W{}^*$

(b) Maximum current speed

(6) Condition of use for additional mooring equipment not covered by this Chapter.

(7) Winch brake holding capacities

(8) For ships of 3,000 gross tonnage and above, documentation confirming that *MSC*.1/*Circ*.1619 has been considered.

(9) The length of each mooring line

(10) Other information or notes related to the design of shipboard fittings or lines.

3 It is recommended that the information related to safe towing and mooring operation in the towing and mooring arrangement plan is incorporated into the pilot card in order to provide pilots with relevant information on harbour or escort operations.

14.4.2 Towing

14.4.2.1 Tow Lines

Where ships are provided with tow lines, wire ropes and fibre ropes used as tow lines are to comply the requirements in **Chapter 4** and **Chapter 5, Part L**, respectively. The specifications of tow lines (e.g. breaking load, length) and the number of tow lines are to be in accordance with **Table 14.3.1-1** according to ship equipment number. However, when calculating the equipment number, the effect of deck cargoes at the ship nominal capacity condition is to be considered with respect to the side-projected area A.

14.4.2.2 Towing Fittings*

1 The strength of shipboard fittings used for towing operations at the bow, sides and stern as well as their supporting hull structures are to comply with the requirements of **14.4**. For fittings intended to be used for both towing and mooring, the requirements of **14.4.3** are to be applied.

2 The arrangement of towing fittings is to be in accordance with the following **(1)** and **(2)**.

(1) Towing fittings are to be located on stiffeners, girders, or both which are parts of the deck construction so as to facilitate efficient distribution of the towing load. Other arrangements may be accepted (for chocks in bulwarks, etc.) provided the strength is confirmed adequate for the intended service.

(2) When towing fittings cannot be located as specified in **(1)**, appropriate reinforced members are to be provided directly underneath the towing fittings.

3 Loads for towing fittings is to be in accordance with the following **(1)** to **(3)**.

(1) Towing fittings are to be at least based on the following loads.

(a) For normal towing operations, the intended maximum towing load

(b) For other towing services, the minimum breaking load of the tow line specified in **Table 14.3.1-1** according to equipment number.

(c) For fittings intended to be used for both normal and other towing operations, the greater of the loads specified in **(a)** and

(b).

(d) The increase of line design break force for fibre rope in consideration of rope age degradation and wear needs not to be taken into account for the loads applied.

(2) Design load for the supporting hull structures of towing fittings are to be in accordance with the following **(a)** to **(d)**:

(a) For normal towing operations, 1.25 *times* the intended maximum towing load

(b) For other towing services, the minimum breaking load of the tow lines specified in **Table 14.3.1-1** according to the equipment number.

(c) For fittings intended to be used for both normal and other towing operations, the greater of the loads specified in **(a)** and **(b)**.

(d) The increase of line design break force for fibre rope in consideration of rope age degradation and wear needs not to be taken into account for the loads applied.

(3) The design load is to be applied to fittings in all directions that may occur in consideration of the arrangements shown in the towing and mooring arrangements plan specified in **14.4.1.4**. Where the tow line is a paid-out through a fitting, the design load is to be equal to the resultant force of the design loads acting on the line, but need not exceed twice the design load on the line. (*See* **Fig. 14.4.2-1**).

Fig. 14.4.2-1 Design Load

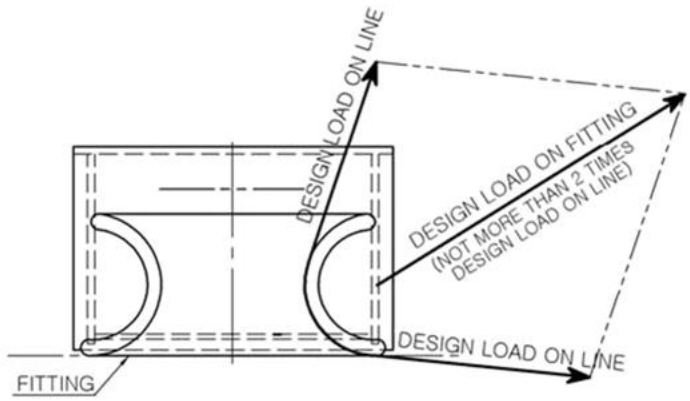

4 Design of towing fittings is to be in accordance with the following **(1)** to **(4)**.

(1) Towing fittings are to be selected from industry standards deemed appropriate by the Society, and are to be based on the loads specified in **14.4.2.2-3(1)**.

(2) Towing bitts (double bollards) are to be selected for the towing line attached with eye splice if the industry standard distinguishes between different methods to attach the line, i.e. figure-of-eight or eye splice attachment.

(3) When towing fittings are not selected from industry standards deemed appropriate by the Society, strength assessments by beam theory or finite element analysis using net scantlings are to be carried out. For strength assessments, the design load is to be applied the minimum design load of the supporting hull structures specified in **14.4.2.2-3(2)** and the allowable stresses specified in **14.4.2.3-4**. At the discretion of the Society, load tests may be accepted as alternatives to strength assessments by calculations. Towing bitts (double bollards) are to be of sufficient strength to withstand the loads caused by tow lines attached with eye splices.

(4) The followings are recommended to be followed for the strength assessment by means of finite element analysis referred to in **(3)** above.

(a) The geometry is to be idealized as realistically as possible.

(b) The ratio of element length to width is not to exceed 3.

(c) Girders are to be modelled using shell or plane stress elements.

(d) Symmetric girder flanges may be modelled by beam or truss elements.

(e) The element height of girder webs is not to exceed one-third of the web height.

(f) In way of small openings in girder webs the web thickness is to be reduced to a mean thickness over the web height.

(g) Large openings are to be modelled.

(h) Stiffeners may be modelled by using shell, plane stress, or beam elements.

(i) Stresses are to be read from the centre of the individual element.

(j) For shell elements the stresses are to be evaluated at the mid-plane of the element.

14.4.2.3 Supporting Hull Structures

1 Design load for the supporting hull structures of towing fittings are to be as specified in **14.4.2.2-3**:

2 The reinforced members beneath shipboard fittings are to be effectively arranged for any variation of direction (horizontally and vertically) of the towing forces acting upon the shipboard fittings, and the proper alignment of the fittings and their supporting hull structures is to be ensured. (*See* **Fig. 14.4.2-2**)

Fig. 14.4.2-2 Sample Arrangement of Shipboard Fittings and Supporting Hull Structures

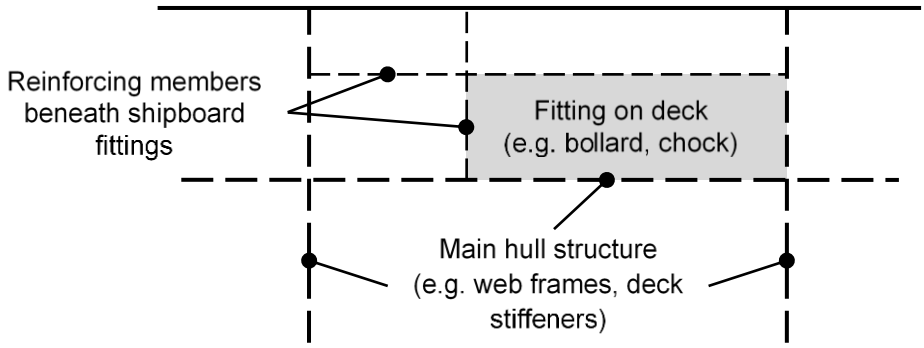

3 The acting point of the towing force on shipboard fittings is to be taken at the attachment point of a tow line or at a change in its direction. For bollards and bitts, the attachment point of the tow line is to be taken as not less than 4/5 of the tube height above the base (*See* **Fig. 14.4.2-3**).

Fig. 14.4.2-3 Acting point of the towing force

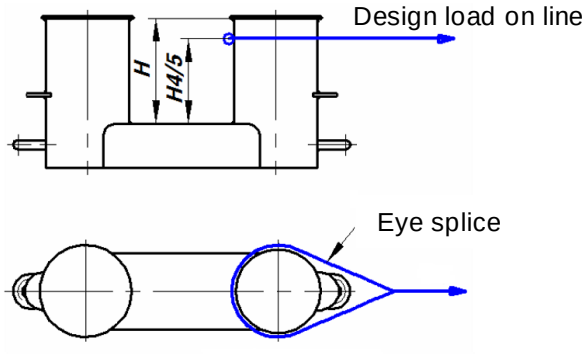

4 Allowable stresses of supporting hull structures are not to be more than the following:

(1) For strength assessments using beam theory or grillage analysis:

(a) Normal stress: 100% of the specified minimum yield point of the material

(b) Shearing stress: 60% of the specified minimum yield point of the material

(2) For strength assessments using finite element analysis:

(a) Equivalent stress: 100% of the specified minimum yield point of the material

(3) The normal stress referred to in **(1)** above is the sum of bending stress and axial stress with the corresponding shearing stress acting perpendicular to the normal stress. No stress concentration factors are to be considered.

(4) The means of finite element analysis are to be in accordance with the requirements in **14.4.2.2-4(4)**.

14.4.2.4 Safe Towing Load (TOW)

The safe towing load (TOW) are to be in accordance with the following **(1)** to **(6)**.

(1) For towing fittings used for the normal towing operations, TOW is not to exceed 80% of the minimum design load specified in **14.4.2.2-3(2)(a)**.

(2) For towing fittings used for the other towing operations, TOW is not to exceed 80% of the minimum design load specified in **14.4.2.2-3(2)(b)**.

(3) For towing fittings used for both normal and other towing operations, TOW is to be the greater of TOW according to **(1)** and **(2)**.

(4) For fittings intended to be used for both towing and mooring, the requirements in **14.4.3.5** are to apply.

(5) The TOW (t) of each fitting is to be marked by weld beads and paint, or the equivalent, on the fitting. For fittings intended to be used for both towing and mooring, the safe working load (t) according to **14.4.3.5** is to be marked in addition to TOW.

(6) The requirements for the TOW specified in **(1)** to **(5)** above, are applied for the use with no more than one line. If not otherwise chosen, for towing bitts (double bollards), TOW is the load limit for a tow line attached with eye-splice.

14.4.3 Mooring

14.4.3.1 Ship Design Minimum Breaking load (MBL_{sd})

1 MBL_{sd} is the design load for the selection of mooring lines, mooring fittings and for the design of supporting hull structures.

2 MBL_{sd} is to be at least not less than minimum breaking load (MBL) specified in **14.4.3.2**. Where the minimum breaking load (MBL) is adjusted based on the acceptable wind speed, the number of mooring lines, etc., MBL_{sd} is to be not less than the value MBL^{*}, MBL^{**}. MBL_{sd} may be determined in accordance with the method deemed appropriate by the Society.

3 Where the MBL_{sd} is determined by the widely recognized industry standards or the owner's standard, MBL_{sd} is to be not less than the minimum breaking load (MBL) specified in this section.

14.4.3.2 Mooring Lines*

1 Mooring lines are to be in accordance with the following **(1)** to **(4)**.

(1) Ships are to be provided with mooring lines of which $LDBF$ is more than MBL_{sd}.

(2) Wire ropes or synthetic ropes used as mooring lines are to comply with the requirements in **Chapter 4** and **Chapter 5, Part L**, respectively.

(3) For mooring lines connected with powered winches where the rope is stored on the drum, steel cored wire ropes of suitable flexible construction may be used instead of fibre cored wire ropes subject to the approval by the Society.

(4) The length of individual mooring lines may be reduced by up to 7 % of the lengths required in this section, provided that the actual total length of the stipulated number of mooring lines is not less than the required total length.

2 The minimum breaking load (MBL), the number, the length of mooring lines for ships with equipment numbers of 2,000 or less (EN ≤ 2,000) are to be in accordance with the following **(1)** and **(2)**.

(1) The minimum breaking load (MBL), the number and the length of mooring lines are to be in accordance with **Table 14.4.3-1** according to the equipment number. However, when calculating the equipment number, the effect of deck cargoes at the ship nominal capacity condition is to be considered with respect to the side-projected area A.

(2) Notwithstanding **(1)** above, for ships having the ratio A *to* EN greater than 0.9 ($A/EN > 0.9$), the following number of ropes is to be added to the number required by **Table 14.4.3-1** for mooring lines.

Where $\frac{A}{EN}$ is greater than 0.9 but 1.1 or less: 1

Where $\frac{A}{EN}$ is greater than 1.1 but 1.2 or less: 2

Where $\frac{A}{EN}$ is greater than 1.2: 3

3 The minimum breaking load and the number of mooring lines for ships with an equipment number greater than 2,000 (EN > 2,000) are to be based on the side-projected area A_1. The side-projected area A_1 is to be calculated similar to the side-projected area A according to **14.5.1.1** but in consideration of the following conditions:

(1) The lightest ballast draft is to be considered for the calculation of the side-projected area A_1. For ship types having small variation in the draft (e.g. passenger ships, RO-RO ships), the side-projected area A_1may be calculated using the designed maximum load line.

(2) Wind shielding of the pier can be considered for the calculation of the side-projected area A_1 unless the ship is intended to be regularly moored to jetty-type piers. A height of the pier surface of 3 m over waterline may be assumed; in other words, the lower part of the side-projected area with a height of 3 m above the waterline for the considered loading condition may be disregarded for the calculation of the side-projected area A_1

(3) For ships that in which cargoes are loaded on deck, the side-projected are A_1 is to be the following **(a)** or **(b)**, whichever is the greater.

(a) Side-projected area at the lightest ballast condition.

(b) Side-projected area at the ship nominal capacity condition with cargoes loaded on deck. In such cases, the draft is to be the designed maximum load line.

4 The mooring lines for ships with an equipment number greater than 2,000 (EN > 2,000) are based on the following environmental conditions:

(1) Maximum current speed : 1.0 *m/s*

(2) Maximum wind speed v_w : As obtained from the following formulae.

(a) $v_w = 25.0 - 0.002(A_1 - 2000)$ (*m/s*) for passenger ships, ferries and car carriers with 2,000 $m^2 < A_1 \leq 4{,}000\ m^2$

(b) $v_w = 21.0$ (*m/s*) for passenger ships, ferries and car carriers with 4,000 $m^2 > A_1$

(c) $v_w = 25.0$ (*m/s*) for other ships

5 Minimum breaking load (MBL) for ships with an equipment number greater than 2,000 (EN > 2,000) is to be in accordance with the following **(1)** to **(4)**.

(1) Minimum breaking load (MBL) is to be taken as follows:

$MBL = 0.1A_1 + 350$ (*kN*)

A_1 : Ship side-projected area specified in **-3**.

(2) Where the minimum breaking load (MBL) exceeds 1,275 *kN*, the maximum wind speed v_w may be decreased in conjunction with an adjustment to the strength of the lines as the acceptable wind speed $v_w{}^*$ using the following formula but is not to be less than 21 *m/s*:

$$v_w{}^* = v_w\sqrt{\frac{MBL^*}{MBL}}$$

MBL^* : The adjusted strength of mooring lines (*kN*)

(3) In case that the maximum wind speed is raised up considering the ship's navigation area, the maximum wind speed may be increased in conjunction with an adjustment to the strength of lines (MBL). For the calculation of the acceptable wind speed, the formula specified in **(2)** above may be used.

(4) The strength of spring lines is to be the same as that of the head, stern and breast lines.

6 The number of mooring lines for ships with an equipment number greater than 2,000 (EN > 2,000) is to be in accordance with the following **(1)** to **(4)**.

(1) The total number of head, stern and breast lines is to be obtained from the following formula and rounded to the nearest whole number:

(a) for oil tankers, chemical tankers, bulk carriers and ore carriers

$n = 8.3 \times 10^{-4}A_1 + 4$

(b) for others

$n = 8.3 \times 10^{-4}A_1 + 6$

(2) Notwithstanding the requirement in **(1)**, the number of head, stern and breast lines may be increased or decreased in conjunction with an adjustment to the strength of the lines. The adjusted strength, MBL^{**}, is to be taken as follow.

$MBL^{**} = 1.2 \cdot MBL \cdot n/n^{**} \leq MBL$ (*kN*) for an increased number of lines :

$MBL^{**} = MBL \cdot n/n^{**}$ (*kN*) for a reduced number of lines :

n^{**}: The increased or decreased total number of head, stern and breast lines

n : The number of lines for the considered ship type as calculated by the formulae specified in **(1)** without rounding.

MBL : MBL specified in **-5(1)** or MBL^* specified in **-5(2)**

(3) The total number of spring lines is to be taken as not less than the following:

Two lines when the equipment number is less than 5,000 (EN < 5,000)

Four lines when the equipment number is 5,000 or greater (EN ≥ 5,000)

(4) Where the number of head, stern and breast lines may be increased or decreased in conjunction with an adjustment to the strength of the lines, the number of spring lines is to be taken as follows but rounded up to the nearest even number.

$n_s{}^* = MBL/MBL^{**} \cdot n_s$

n_s : The number of lines for the considered ship type as calculated by the formulae specified in **(3)** without rounding.

$n_s{}^*$: The increased or decreased total number of head, stern and breast lines

MBL : MBL specified in **-5(1)** or MBL^* specified in **-5(2)**

7 The strength of head, stern and breast lines may be increased in conjunction with an adjustment to the number of lines using the formula specified in **-6(2)**.

8 The length of mooring lines for ships with an equipment number greater than 2,000 (EN > 2,000) is to be taken as not less than 200 *m*.

Table 14.4.3-1 Mooring Lines for Ships with Equipment Number ≦ 2,000

Equipment Letter	Equipment number		Mooring line		
			Number	Length of each line	Breaking load
	Over	Up to		*m*	*kN*
A1	50	70	3	80	37
A2	70	90	3	100	40
A3	90	110	3	110	42
A4	110	130	3	110	48
A5	130	150	3	120	53
B1	150	175	3	120	59
B2	175	205	3	120	64
B3	205	240	4	120	69
B4	240	280	4	120	75
B5	280	320	4	140	80
C1	320	360	4	140	85
C2	360	400	4	140	96
C3	400	450	4	140	107
C4	450	500	4	140	117
C5	500	550	4	160	134
D1	550	600	4	160	143
D2	600	660	4	160	160
D3	660	720	4	160	171
D4	720	780	4	170	187
D5	780	840	4	170	202
E1	840	910	4	170	218
E2	910	980	4	170	235
E3	980	1060	4	180	250
E4	1060	1140	4	180	272
E5	1140	1220	4	180	293
F1	1220	1300	4	180	309
F2	1300	1390	4	180	336
F3	1390	1480	4	180	352
F4	1480	1570	5	190	352
F5	1570	1670	5	190	362
G1	1670	1790	5	190	384
G2	1790	1930	5	190	411
G3	1930	2000	5	190	437

14.4.3.3 Mooring Fittings

1 The strength of shipboard fittings, mooring winches and capstans used for towing operations at the bow, sides and stern as well as their supporting hull structures are to comply with the requirements of **14.4**. For additional mooring fittings as well as their supporting hull structures, the requirements of **14.4** are to apply. However, design loads may be taken as assumed values in consideration of the intended use.

2 The arrangement of mooring fittings is to be in accordance with the following **(1)** and **(3)**.

(1) Mooring fittings, mooring winches and capstans are to be located on stiffeners, girders, or both which are parts of the deck construction so as to facilitate efficient distribution of the mooring load.

(2) When mooring fittings, mooring winches and capstans cannot be located as specified in **(1),** appropriate reinforced members are to be provided directly underneath the towing fittings.

(3) Attention is to be given to the arrangement of the equipment for mooring operations in order to prevent interference of the mooring lines as far as practicable.

3. Mooring fittings is to be in accordance with the following **(1)** and **(3)**.

(1) Mooring fittings are to be selected from industry standards deemed appropriate by the Society and are to be at least based on MBL_{sd}

(2) Mooring bitts (double bollards) are to be chosen for the mooring line attached in a figure-of-eight fashion if the industry standard distinguishes between different methods to attach the line, i.e. figure-of-eight or eye splice.

(3) When mooring fittings are not selected from industry standards deemed appropriate by the Society, strength assessments by beam theory or finite element analysis using net scantlings are to be carried out. For strength assessments, the design load is to be 1.15 *times* MBL_{sd} and the allowable stresses specified in **14.4.3.4-3**. At the discretion of the Society, load tests may be accepted as alternatives to strength assessments by calculations. Mooring bitts (double bollards) are to be of sufficient strength to withstand the loads caused by mooring lines attached with figure-of eight.

14.4.3.4 Supporting Hull Structures

1 The minimum design loads for the supporting hull structures of mooring fittings, mooring winches and capstans are to be in accordance with the following **(1)** to **(3)**. However, the design load is to be applied to fittings in all directions that may occur in consideration of the arrangements shown in the towing and mooring arrangements plan.

(1) For supporting hull structures of mooring fittings, the minimum design load is to be 1.15 times of MBL_{sd}.

(2) For supporting hull structures of mooring winches, the minimum design load is to be 1.25 times the intended maximum brake holding load, where the maximum brake holding load is to be assumed to be not less than 80 % of MBL_{sd}.

(3) For supporting hull structures of capstans, the minimum design load is to be 1.25 times the maximum hauling-in force.

2 The point where the mooring force acts on mooring fittings is to be taken as the attachment point of the mooring line. For bollards and bitts, the attachment point of the mooring line is to be taken not less than 4/5 of the tube height above the base (*See* **Fig. 14.4.3-1(a)**). If fins are fitted to the bollard tubes to keep mooring lines as low as possible, the attachment point of the mooring line may be taken as the location of the fins. (*See* **Fig. 14.4.3-1(b)**)

Fig. 14.4.3-1 Acting Point of Mooring Force

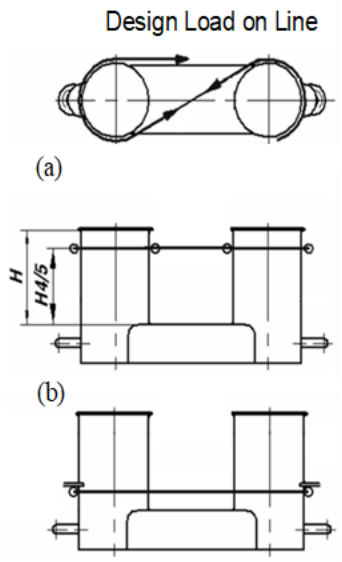

3 Allowable stresses of supporting hull structures are not to be more than the following:

(1) For strength assessments using beam theory or grillage analysis:

(a) Normal stress: 100% of the specified minimum yield point of the material

(b) Shearing stress: 60% of the specified minimum yield point of the material

(2) For strength assessments using finite element analysis:

(a) Equivalent stress: 100% of the specified minimum yield point of the material

(3) The normal stress referred to in **(1)** above is the sum of bending stress and axial stress with the corresponding shearing stress acting perpendicular to the normal stress. No stress concentration factors are to be considered.

(4) The means of finite element analysis are to be in accordance with the requirements in **14.4.2.2-4(4)**.

4 The reinforced members beneath shipboard fittings are to be effectively arranged for any variation of direction (horizontally and vertically) of the towing forces acting upon the shipboard fittings, and the proper alignment of the fittings and their supporting hull structures is to be ensured. (*See* **Fig. 14.4.2-2**)

14.4.3.5 Safe Working Load（SWL）

The safe working load (SWL) to be marked on the mooring fittings is to be in accordance with the following **(1)** to **(3)**.

(1) SWL is not to exceed MBL_{sd}.

(2) The SWL (t) of each fitting, excluding mooring winches and capstan, is to be marked by weld beads and paint, or the equivalent, on the fitting. For fittings intended to be used for both towing and mooring, TOW according to **14.4.2.4** is to be marked in addition to SWL.

(3) The requirements of **(1)** and **(2)** above apply only in cases where no more than one line is used.

14.4.4 Arrangement and selection of mooring line, mooring equipment, capstan, and winch

14.4.4.1 Application

1 The requirements in this **14.4.4** apply to ships of 3,000 gross tonnage and above.

2 Ships of less than 3,000 gross tonnage are to comply with the requirements in this **14.4.4** as far as reasonably practicable, or are to comply with applicable the national standards of their respective Administration.

14.4.4.2 Arrangement of mooring line, mooring equipment, capstan, and winch

1 The arrangement of mooring lines, mooring equipment, capstans and winches is to be in accordance with the following **(1)** through **(11)**.

(1) To minimise the need for complex mooring line configurations during the normal operation of the ship, mooring winches and fairleads are to be positioned to allow the use of direct, unobstructed leads from mooring winches to the fairleads for each mooring line described in the towing and mooring arrangements plan.

(2) Where the arrangement in **(1)** above is not possible, the following **(a)** to **(c)** measures are to be considered.

(a) The deviation from straight leads are to be by means of pedestal fairleads, rolling fairleads or similar means that will reduce the friction between line/fitting and will reduce bend losses. Steel fittings such as horns or bollards without chafe protection are to be avoided.

(b) Lines are to traverse mooring areas from winches to fairleads by the shortest route.

(c) Changes of direction of mooring line are to be minimised to prevent reductions in mooring line strength due to bend loss and introduction of complex snap-back areas.

(3) To provide for the oversight and supervision of mooring operations, mooring areas are to be designed to give supervising personnel unobstructed views of installed mooring lines, mooring equipment, capstans and winches. This is to also include the provision of platform or other appropriate means by which supervising personnel can obtain unobstructed views of mooring areas and the berth arrangements planned to be used from positions clear of hazards.

(4) Mooring arrangements are to be designed to provide unobstructed views between shipboard personnel and the lines being worked within mooring areas.

(5) Winch operators are to be provided with mooring winch controls that are positioned so as to allow operators direct views of the lines being worked in mooring areas worked without needing to step away from the winch controls. Winch controls are to be positioned clear of hazards.

(6) Deck illumination is to provide clear views of mooring areas as well as the equipment and lines being worked during hours of darkness or in conditions of limited visibility.

(7) Designs of mooring arrangements and mooring areas are to consider the following **(a)** to **(c)** constraints.

(a) Anticipated variations in shore-based mooring arrangements and the need to preserve flexibility in mooring line configurations to achieve an appropriate restraining capacity.

(b) Ship structural element (including accommodation, ventilation exhausts, cargo equipment or similar obstacles) impact on access.

(c) Special requirements for the location and selection of mooring lines, mooring equipment, capstans and winches; for example, special requirements for canal transits.

(8) Unless not permitted by ship size or special features, mooring lines, mooring equipment, capstans and winches in mooring areas are to be positioned so as to provide shipboard personnel with unobstructed access to the following during mooring operations.

(a) Mooring winches and winch controls.

(b) Mooring fittings.

(c) Mooring lines and mooring line stowage.

(d) Spaces between shipside fairleads and winches to permit mooring personnel to safely apply stoppers to mooring lines when necessary.

(9) Mooring arrangements are to be designed to avoid exposing shipboard personnel to lines under tension through snap-back or sudden movements of mooring lines. In this respect, the following measures are to be considered.

(a) Winches are to be located close to shipside fairleads. The position of winches is to not result in inappropriate mooring line orientations that block or otherwise interfere with the use of shipside fairleads for additional mooring lines, the connecting up of tugs for towage during mooring operations or the ability to safely moor the ship.

(b) Enclosing mooring lines behind barriers provided that such enclosures do not adversely affect mooring system performance and do not prevent the effective inspection and maintenance of equipment, fittings and mooring lines.

(c) Alternative designs where ship personnel do not need to work close to or have to pass mooring lines that are under tension or are potentially under tension.

(d) Use of appropriate, alternative means to moor the ship, including but not limited to automated mooring systems.

(e) Permanently fix mooring lines to mooring winches.

(10) Mooring areas should be considered as potential snap-back zones and signage should be provided to indicate that this is the case.

(11) To minimise the need for manual handling of towing and mooring lines, the following **(a)** to **(f)** measures are to be considered.

(a) Equipment and fitting arrangements should minimise the distance over which mooring lines may need to be handled.

(b) The use of fixed or dedicated mooring lines, considering the need to avoid inappropriate mooring line orientations that block or otherwise interfere with the use of shipside fairleads for additional mooring lines, the connecting up of tugs for

towage during mooring operations or the ability to safely moor the ship.

(c) Layouts are to be designed to prevent manual intervention in transfers of mooring lines from storage drums to mooring winch drums and vice versa.

(d) Use of spooling equipment.

(e) Additional mooring lines are to be available for immediate use, provided that their stowage does not interfere with the safe operation of the mooring equipment.

(f) A sufficient number of mooring winches so that manual use of warping ends, stoppers, capstans and bitts is minimized, as far as possible, during mooring operations.

2 Being unable to comply with **(2)**, **(4)**, **(5)**, **(8)**, **(9)** and **(11)** above is to be recorded as supplementary information in towing and mooring fitting arrangements plan. The reasons for not being able to fulfill the requirements and appropriate safety measures taken instead are to also be included in this supplementary information.

3 Compliance with items **(2)**, **(4)**, **(5)**, **(8)**, **(9)** and **(11)** above is to be indicated on towing and mooring fitting arrangements plan.

14.4.4.3 Selection of mooring line, mooring equipment, capstan, and winch

1 Selection of mooring winches is to be in accordance with the following **(1)** to **(5)**.

(1) Consideration is to be given to the availability of winches with alternative drum arrangements, including split drum arrangements, which can reduce the need for manual handling of mooring lines during mooring operations.

(2) Consideration is to be given to the positioning of winch controls, including the availability of remote controls for winches, to improve the lines of sight and reduce operator exposure to snap-backs.

(3) Consideration is to be given to the availability of constant tension winches and their appropriateness for normal ship operations.

(4) Consideration is to be given to limiting noise levels to ensure proper communication during mooring operations.

(5) To avoid overloads on mooring winches, mooring winch brake holding capacities are to be less than 100 % of the Ship Design Minimum Breaking Load (MBL_{sd}). Alternatively, winches are to be fitted with brakes that allow for reliable settings of brake rendering loads.

2 Selections of mooring equipment and capstans are to be in accordance with the following **(1)** to **(3)**.

(1) Consideration is to be given to the diameter *(D)* of surfaces of mooring fittings that are in contact with mooring lines in relation to mooring line diameter *(d)* (i.e. the *D*/*d* ratio) to reduce or mitigate bend loss of strength.

(2) Consideration is to be given to use mooring equipment and capstans with load-bearing surfaces to minimize damage from chafing and abrasion.

(3) Mooring equipment and capstans are to be compatible in design, diameter, strength, suitability, etc. and maintained with the original purpose and concept of the mooring arrangement.

3 The selection of mooring line is to be in accordance with the following **(1)** to **(7)**.

(1) Consideration is to be given to the diameter *(D)* of surfaces of mooring fittings that are in contact with mooring lines in relation to mooring line diameter *(d)* (i.e. the *D*/*d* ratio) to reduce or mitigate bend loss of strength.

(2) Consideration is to be given to the compatibility of the MBL_{sd} of mooring lines and the brake capacities of mooring winches installed on board.

(3) Line Design Break Force (*LDBF*) is to be 100 % to 105 % of the MBL_{sd}. When lines made of nylon are used as mooring lines, the *LDBF* of the lines is to be the tested under wet and spliced conditions.

(4) Consideration is to be given to the characteristics and limitations of mooring lines (including the material properties and environmental operating conditions anticipated during normal ship operations).

(5) Consideration is to be given to the anticipated behaviours of mooring lines in the event of failure.

(6) Consideration is to be given to the influence on stored energy and the potential for snap-back of high stiffness mooring lines caused by the use of tails.

(7) As far as possible, but at least for lines in the same service (e.g. headlines, breast lines or springs), Mooring lines of the same diameter and type (i.e. material) are to be used.

14.4.4.4 Technical specification documents for mooring lines

The technical specification documents of the mooring lines provided on board are to include the manufacturer recommended minimum diameters *(D)* for fittings in contact with mooring lines and the Line Design Break Forces (*LDBF*) for mooring lines. The properties of mooring lines related to *LDBF* and bend radius (i.e. the *D*/*d* ratio) are to also be included for confirmation of appropriate

mooring line selection.

14.4.4.5 Working Load Limit (*WLL*)

The *WLL* of mooring lines is to be used as user operating limiting values and is not to be exceeded. *WLL* is expressed as a percentage of MBL_{sd} and is to be used as a limiting value in operational mooring analyses. Steel wires have a *WLL* of 55 % of MBL_{sd} and all other cordage (synthetic) have a *WLL* of 50 % of the MBL_{sd}.

14.4.5 Inspection and Maintenance of Mooring Equipment Including Mooring Lines

14.4.5.1 Management Plans for Inspection and Maintenance of Mooring Equipment Including Mooring Lines

Ships of not less than 500 gross tonnage are to have management plans for inspection and maintenance of mooring equipment including mooring lines deemed appropriate by the Society.

14.5 Equipment Numbers and Emergency Towing Arrangements

14.5.1 Equipment Numbers

14.5.1.1 Calculation of Equipment Numbers*

1 Equipment number is the value obtained from the following formula:

$$W^{\frac{2}{3}} + 2.0(hB + S_{fun}) + \frac{A}{10}$$

W : Full load displacement (t)

B : Breadth of ship (m)

h : Effective height (m) defined as follows:

$$h = a + \sum h_i$$

a : Vertical distance (m), at the midship, from the designed maximum load line to the top of the uppermost continuous deck beam at side

h_i : Height (m) at the centreline of each tier of deckhouses having a breadth greater than $B/4$; for the lowest tier h_1 is to be measured at the centreline from the upper deck or from the notional deck line where there is local discontinuity in the upper deck (*See* **Fig. 14.5.1-2**)

S_{fun} : Effective front projected area of the funnel (m^2) defined as follows

$$S_{fun} = A_{FS} - S_{shield}$$

A_{FS} : Front projected area of the funnel (m^2) calculated between the upper deck at the centreline (or the notional deck line where there is local discontinuity in the upper deck) and the effective height h_F. The value for A_{FS} is to be taken as zero if the funnel breadth is $B/4$ or less at all elevations along the funnel's height.

S_{shield} : Section of the front projected area A_{FS} (m^2) which is shielded by all deckhouses having breadth greater than $B/4$. To determine S_{shield}, the deckhouse breadth is assumed B for all deckhouses having breadth greater than $B/4$ (*See* **Fig. 14.5.1-1**)

h_F : Effective height of the funnel (m) measured from the upper deck at the centreline (or the notional deck line where there is local discontinuity in the upper deck) and the top of the funnel. The top of the funnel may be taken at the level where the funnel breadth reaches $B/4$.

A : Side projected area (m^2) of the hull, superstructures, deckhouses and funnels above the designed maximum load line which are within the length of the ship L_2 and also have a breadth greater than $B/4$. The side projected area of the funnel is to be considered in A when A_{FS} is greater than zero. In such cases, the side projected area of the funnel is to be calculated between the upper deck at the centreline (or the notional deck line where there is local discontinuity in the upper deck) and the effective height h_F.

L_2 : Length (m) of ship specified in **2.1.2, Part A** or 0.97 times the length of ship on the designed maximum load line, whichever is smaller. The fore end of L_2 is the perpendicular to the designed maximum load draught at the forward side of the stem, and the aft end of L_2 is the perpendicular to the designed maximum load draught at a distance L_2 aft of the fore end of L_2.

Fig. 14.5.1-1 Front Projected Area of Funnel

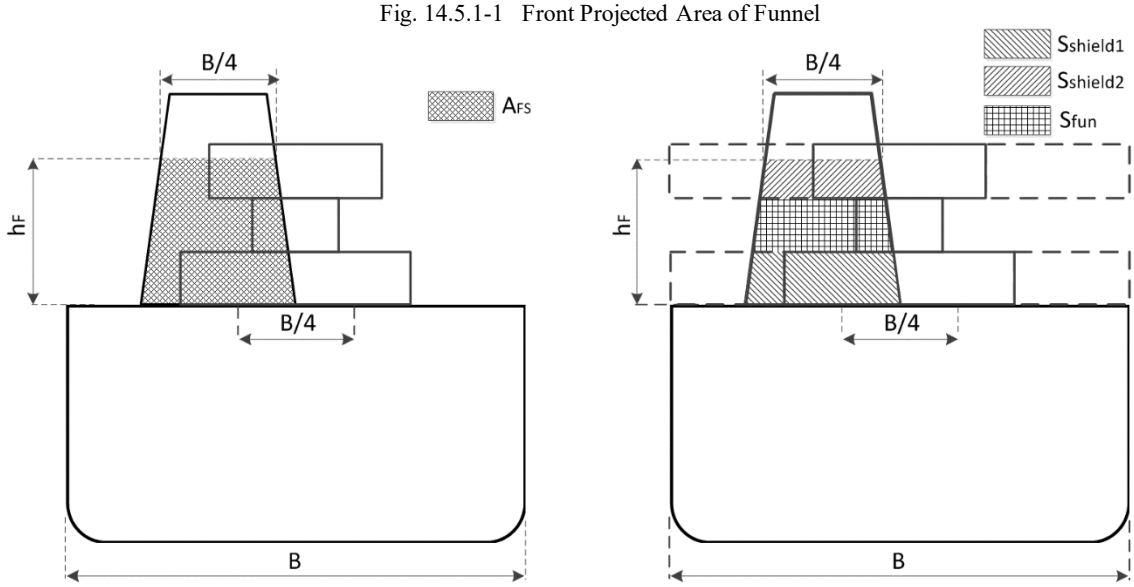

Fig. 14.5.1-2 Side Projected Area of Funnel

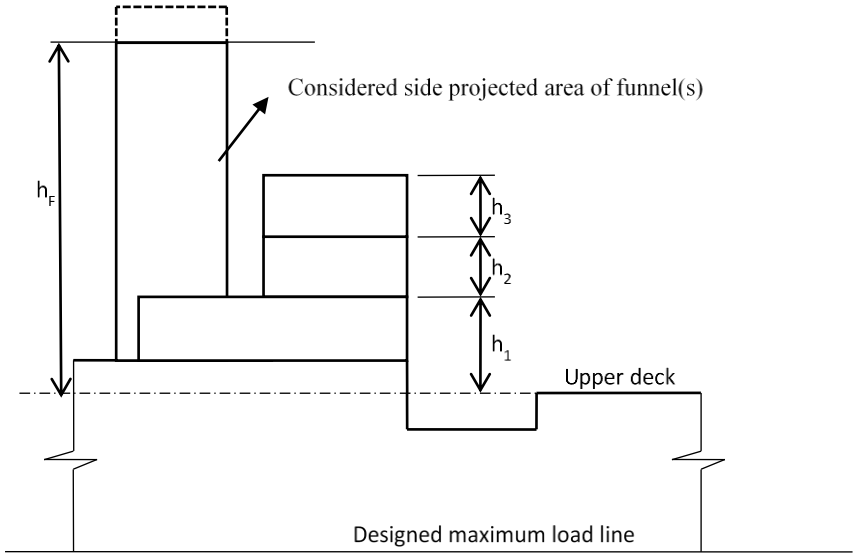

2 Significant figures are to be taken as follows:

(1) Dimensions, such as length, height and breadth are to be in *m* rounded to two decimal places.

(2) The displacement W is to be measured in tons in whole numbers.

(3) Terms in the formula ($W^{2/3}$, $2.0hB$, $0.1A$) are to be rounded to the nearest whole number.

3 Screens or bulwarks 1.5 *m* or more in height are to be regarded as parts of deckhouses when determining h and A. The height of the hatch coamings and that of any deck cargo, such as containers, may be disregarded when determining h and A. With regard to determining A, when a bulwark is more than 1.5 *m* high, the area shown in **Fig. 14.5.1-3** as A_2 is to be included in A.

Fig. 14.5.1-3 Effective Areas for Screens, Bulwarks, etc.

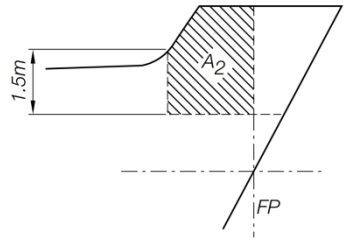

4 When calculating the equipment number, the following items may be excluded from ship side projected area A:

(1) Derrick posts, ventilators, etc. in continuation with superstructures or deckhouses

(2) Hatch coamings and hatch covers

(3) Cargo carried on deck. However, when calculating the equipment number for determining towing and mooring arrangements, the effect of deck cargoes at the ship nominal capacity condition is to be considered with respect to the side-projected area A.

(4) Deck camber

5 When several funnels are fitted on the ship, the above parameters are to be taken as follows:

A_{FS} : Sum of the front projected area of each funnel (m^2), calculated between the upper deck at the centreline (or the notional deck line where there is local discontinuity in the upper deck) and the effective height A_{FS}. The value for A_{FS} is to be taken as zero if the sum of each funnel breadth is $B/4$ or less at all elevations along the funnel's height.

h_F : Effective height of the funnel (m) measured from the upper deck at the centreline (or the notional deck line where there is local discontinuity in the upper deck) and the top of the highest funnel. The top of the highest funnel may be taken at the level where the sum of each funnel breadth reaches $B/4$.

A : Side projected area (m^2) of the hull, superstructures, deckhouses and funnels above the designed maximum load line which are within the length of the ship L_2. The total side projected area of the funnel is to be considered in the side projected area of the ship (A) when A_{FS} is greater than zero. The shielding effect of funnels in transverse direction may be considered in the total side projected area (i.e. when the side projected areas of two or more funnels fully or partially overlap), the overlapped area needs only to be counted once.

14.5.2 Emergency Towing Arrangements

14.5.2.1 Application

The requirements in **14.5.2** apply to tankers, ships carrying liquefied gases in bulk and ships carrying dangerous chemicals in bulk of not less than 20,000 deadweight tonnage (hereinafter referred to as 'ships').

14.5.2.2 General

1 Emergency towing arrangements are classified into two types: the 1,000 *kN* type and the 2,000 *kN* type, and are to comply with the requirements specified in **14.5.2.3** and **14.5.2.4**.

2 Emergency towing arrangements are to be capable of rapid deployment and easy connection to a towing vessel at all times even in the absence of main power on the ship.

3 An appropriate type of emergency towing arrangement selected from below, corresponding to the *DWT* of the ship is to be fitted at both ends on board the ship.

(1) 20,000 *tons* ≤ *DWT* < 50,000 *tons*: 1,000 *kN* type emergency towing arrangement

(2) 50,000 *tons* ≤ *DWT*: 2,000 *kN* type emergency towing arrangement

4 At least one of the emergency towing arrangements specified in **-3**, is to be pre-rigged ready for rapid deployment (hereinafter referred to as pre-rigged emergency towing arrangement).

14.5.2.3 Specification of Emergency Towing Equipment

1 The major components of an emergency towing arrangement are listed in **Table 14.5.2-1** and **Table 14.5.2-2**.

Table 14.5.2-1 The Major Components of an Emergency Towing Arrangement

Components	Non pre-rigged emergency towing arrangement	Pre-rigged emergency towing arrangement
Pick-up gear	Optional	Yes
Towing pennant	Optional	Yes
Fairlead	Yes	Yes
Strongpoint	Yes	Yes
Roller pedestal	Yes	Depending on design

Table 14.5.2-2 Chafing Gear

Components	Emergency towing arrangements fitted at forward of ship	Emergency towing arrangements fitted at aft of ship
Chafing gear	Yes	Depending on design

2 The major components of an emergency towing arrangement are to comply with the following **(1)** and **(2)**.

(1) Towing pennants, chafing gear, fairleads and strongpoints are to have at least the following working strength corresponding to the type of emergency towing arrangement.

(a) For 1,000 *kN* type emergency towing arrangement: 1,000 *kN*

(b) For 2,000 *kN* type emergency towing arrangement: 2,000 *kN*

Where working strength is defined as one half the ultimate strength

The strength is to be sufficient for all relevant angles of the towline, i.e. up to 90° from the ship's centreline to port and starboard and 30° downwards.

(2) Other components are to have a working strength sufficient to withstand the load to which such c omponents may be subjected during the towing operation.

3 The towing pennant is to comply with the following **(1)** and **(2)**.

(1) The towing pennant is to have a length of at least twice the lightest seagoing ballast freeboard at the fairlead plus 50 *m*.

(2) The towing pennant is to have a hard eye-formed termination allowing connection to a standard bow shackle.

4 The strongpoint and fairlead is to be located so as to facilitate towing from either side of the bow or stern and minimize the stress on the towing system.

5 For strongpoints, the inboard end fastening is to be a stopper or bracket or other fitting of equivalent strength. The strongpoint can be integrated with the fairlead.

6 Fairleads are to comply with the following **(1)** to **(4)**.

(1) Fairleads are to have an opening large enough to pass the largest portion of the chafing gear, towing pennant or towing line.

(2) The fairlead is to give adequate support for the towing pennant during towing operation which means bending 90° to port and to starboard side and 30° downwards.

(3) The bending ratio (towing pennant bearing surface diameter to towing pennant diameter) is to be not less than 7 to 1.

(4) The fairlead is to be located as close as possible to the deck and, in any case, in such a position that the chafing chain is approximately parallel to the deck when it is under strain between the strongpoint and the fairlead.

7 If a chafing chain may be used, the chafing chain is to comply with the following **(1)** to **(4)**.

(1) The chafing chain is to be a Grade 2 chain or Grade 3 chain specified in **Chapter 3, Part L** of the Rules. For each type of emergency towing arrangement, the nominal diameter of chafing chains is to comply with the value indicated in **Table 14.5.2-3**.

(2) The chafing chain is to be long enough to ensure that the towing pennant remains outside the fairlead during the towing operation. A chain extending from the strongpoint to a point at least 3 *m* beyond the fairlead may meet this requirement.

(3) One end of the chafing chain is to be suitable for connection to the strongpoint. The other end is to be fitted with a pear-shaped open link allowing connection to a standard bow shackle.

(4) The chafing chain is to be stowed in such a way that it can be rapidly connected to the strongpoint.

Table 14.5.2-3 Nominal Diameter of Chafing Chains

Type of emergency towing arrangements	Nominal diameter of chains (*mm*)	
	Grade 2 chain	Grade 3 chain
1,000 *kN* type	62 *mm*	52 *mm*
2,000 *kN* type	90 *mm*	76 *mm*

8 The pick-up gear is to comply with the following **(1)** to **(3)**.

(1) The pick-up gear is to be protected against the weather and other adverse conditions that may prevail.

(2) The pick-up gear is to be floatable.

(3) A marker buoy with a self-ignition light is to be provided.

9 All emergency towing arrangements are to be clearly marked to facilitate safe and effective use even in darkness and poor visibility.

10 The pre-rigged emergency towing arrangement is to comply with the following **(1)** to **(2)**.

(1) The emergency towing arrangement is to be capable of being deployed according to its operation manual in harbour conditions in not more than 15 minutes.

(2) The pick-up gear for the aft towing pennant is to be designed at least for manual operation by one person taking into account both of the following **(a)** and **(b)** conditions.

(a) Absence of power

(b) The potential for adverse environmental conditions that may prevail during such emergency towing operations

11 The non pre-rigged emergency towing arrangement is to be capable of being deployed according to its operation manual in harbour conditions in not more than 1 hour.

12 The forward emergency towing arrangement is to be designed at least with a means of securing a towline to the chafing gear using a suitably positioned pedestal roller to facilitate connection of the towing pennant.

14.5.2.4 Soundness of Emergency Towing Arrangement

The emergency towing arrangement is to comply with the following **(1)** or **(2)**.

(1) Where a prototype of the emergency towing arrangement is arranged in the same manner as it is to be installed on board the ship, the prototype test is to be carried out in accordance with the requirements specified in **Chapter 6, Part 2 of Guidance for the Approval and Type Approval of Materials and Equipment for Marine Use** and a production test of individual components is to be carried out in accordance with the same requirements.

(2) Emergency towing arrangements are to comply with the requirements specified in the following **(a)** to **(c)**.

(a) Loose gear such as chafing gear or towing pennants among the components listed in **Table 14.5.2-1** and **-2** are to be tested according to the requirements of **Part K** or **Part L** of the Rules or other standards deemed appropriate by the Society.

(b) Fixed gear such as strong points and fairleads among the components listed in **Table 14.5.2-3** are to be tested according to the requirements of **Part K** or **Part L** of the Rules or other standards deemed appropriate by the Society. A strength analysis of the foundations of these components and associated supporting structures including reinforced members is to be carried out according to the conditions specified in **14.5.2.3-2** and confirmation that these components have adequate strength corresponding to the type of emergency towing arrangements is to be made. Where the structural configuration of the arrangement is of a particularly complex or novel nature that a strength analysis cannot be satisfactorily carried out, a suitable load test deemed appropriate by the Society is to be carried out.

(c) After the emergency towing arrangements are installed on board, it is to be demonstrated that the requirements specified in **14.5.2.3-10**, **14.5.2.3-11** and **14.5.2.3-12** are satisfied.

14.5.3 Emergency Towing Procedures

14.5.3.1 General

1 Ships are to be provided with an emergency towing procedure that describes the towing procedure to be used in emergency situations.

2 The procedure specified in **-1** above is to be based on existing arrangements and equipment available on board the ship and is

to include the following:

(1) drawings of fore and aft deck showing possible emergency towing arrangements;

(2) inventory of equipment on board that can be used for emergency towing;

(3) means and methods of communication;

(4) sample procedures to facilitate the preparation for and conducting of emergency towing operations.

14.6 Hatch Cover

14.6.1 Application

14.6.1.1 General

1 The construction and the means for closing of cargo and other hatchways on exposed decks are to comply with the requirements in **14.6**.

2 Where the loading condition or the type of construction differs from that specified in **14.6**, the calculation method used is to be as deemed appropriate by the Society.

3 Hatch covers and hatch coamings on non-exposed decks of ships and those of fishing vessels are to be as deemed appropriate by the Society.

14.6.1.2 Definitions

The terms used in **14.6** are defined as follows.

(1) "Type 1 ship" means any ship other than "Type 2 ship".

(2) "Type 2 ship" means ore carriers and combination carriers designed to carry either oil or solid cargoes in bulk(e.g. ore/oil carriers) defined in **1.3.1(13), Part B** (excluding those affixed with the notation "*CSR*"), and self-unloading ships defined in **1.3.1(19), Part B**.

14.6.2 General Requirement

14.6.2.1 General

1 Primary supporting members and secondary stiffeners of hatch covers are to be continuous over the breadth and length of hatch covers. When this is impractical, appropriate arrangements are to be adopted to ensure sufficient load carrying capacity and sniped end connections are not to be allowed.

2 The spacing of primary supporting members parallel to the direction of secondary stiffeners is not to exceed 1/3 of the span of the primary supporting members. When strength calculation is carried out by finite element method, this requirement is not applied.

3 Secondary stiffeners of hatch coamings are to be continuous over the breadth and length of said hatch coamings.

4 Where hatch covers are subject to helicopter loads, they are to comply with the requirements in **10.4.6**.

14.6.3 Net Scantling Approach

14.6.3.1 Application

1 Unless otherwise specified, the structural scantlings specified in **14.6** are to be net scantlings which do not include any corrosion additions.

2 "Net scantlings" are the scantlings necessary to obtain the minimum net scantlings required by **14.6.5** and **14.6.9**.

3 Required gross scantlings are not to be less than the scantlings obtained from adding the corrosion addition t_c specified in **3.3** to the net scantlings obtained from the requirements in **14.6**.

4 Strength calculations using finite element method are to be performed with net scantlings.

14.6.4 Design Loads of Hatch Cover and Hatch Coaming

14.6.4.1 Design Loads of Hatch Cover and Hatch Coaming

The "design load" used in **14.6** is to be the value specified in **4.10**.

14.6.5 Strength Criteria of Hatch Covers

14.6.5.1 Permissible stresses and deflections

1 All hatch cover structural members are to comply with the following formulae:

$\sigma_{vm} \leq \sigma_a$ for shell elements in general.

$\sigma_{axial} \leq \sigma_a$ for rod or beam elements in general.

Where:

σ_a: Allowable stress as defined in Table 14.6.5-1

σ_{vm} : Von Mises stress (N/mm^2) to be taken as follows:

$$\sigma_{vm} = \sqrt{{\sigma_x}^2 - \sigma_x\sigma_y + {\sigma_y}^2 + 3\tau_{xy}^2}$$

σ_{axial}: Axial stress (N/mm^2) in rod or beam elements

σ_x : Normal stress (N/mm^2) in the x -direction (N/mm^2)

σ_y : Normal stress (N/mm^2) in the y -direction (N/mm^2)

τ_{xy} : Shear stress (N/mm^2) in the x-y plane

x, y : Coordinates of a two-dimensional Cartesian system in the plane of the considered structural element

σ_Y: Specified minimum yield stress (N/mm^2) of the material. However, when material with σ_Y of more than 355 (N/mm^2) is used, the value for σ_Y is to be as deemed appropriate by the Society.

2 The equivalent stress σ_{vm} (N/mm^2) in steel pontoon covers and hatch beams is not to be greater than 0.68 σ_Y, where σ_Y is as specified in **-1** above.

3 For finite element method calculations, equivalent stress σ_{vm} (N/mm^2) in girders with unsymmetrical flanges of steel hatchway covers and steel weathertight covers is to be determined according to the following **(1)** or **(2)**:

(1) Finite element method calculations using the stress obtained for fine mesh elements; or

(2) Finite element method calculations using the stress at the edge of the element or the stress at the centre of the element, whichever is greater.

4 Deflection is to comply with following **(1)** and **(2)**

(1) When the design vertical wave load is acting on steel hatchway covers, steel pontoon covers and portable beams, the vertical deflection of primary supporting members is not to be taken as more than that given by the following:

for steel hatchway covers : 0.0056ℓ

for steel pontoon covers and hatch beams : 0.0044ℓ

ℓ: Span of primary supporting members (m)

(2) Where steel hatch covers are arranged for carrying containers and mixed stowage is allowed, i.e. a 40-foot container is stowed on top of two 20-foot containers, particular attention is to be paid to the deflections of hatch covers. In addition the possible contact of deflected hatch covers with in hold cargo has to be observed.

Table 14.6.5-1 Allowable Stresses

Members of	Subject to	σ_a (N/mm^2)
Hatch cover structure	External pressure, as defined in 4.10.2.1	$0.80\sigma_Y$
	Other loads, as defined in 4.10.2.2 to 4.10.2.5	$0.90\sigma_Y$ for static+dynamic load case $0.72\sigma_Y$ for static load case

14.6.5.2 Local net plate thickness of steel hatch covers

1 The local net thickness t_{net} (mm) of steel hatch cover top plating is not to be less than that obtained from the following formula, and it is not to be less than 1% of the spacing of the stiffeners or 6 mm, whichever is greater:

$$t_{net} = 0.0158F_p s\sqrt{\frac{P}{0.95\sigma_Y}} \text{ (mm)}$$

F_p : Coefficient given by the following formula:

1.9 σ/σ_a ($\sigma/\sigma_a \geq 0.8$ for the attached plate flange of primary supporting members)

1.5 ($\sigma/\sigma_a < 0.8$ for the attached plate flange of primary supporting members)

σ : Maximum normal stress (N/mm^2) of the attached plate flange of primary supporting members (*See* Fig. 14.6.5-1)

σ_a : Permissible stress (N/mm^2) specified in Table 14.6.5-1

s : Stiffener spacing (mm)

P : Design load (kN/m^2) specified in **4.10.2.1** and **4.10.2.3-1(1)**

σ_Y : Minimum yield stress (N/mm^2) of the material

2 The net thickness of double skin hatch covers and box girders is to be obtained in accordance with **14.6.5.5** below taking into consideration of the permissible stresses specified in **14.6.5.1-1.**

3 When the lower plating of double skin hatch covers is taken into account as a strength member of the hatch cover, the net thickness t_{net} (mm) of the lower plating is not to be less than 5 mm.

4 When lower plating is not considered to be a strength member of the hatch cover, the thickness of the lower plating is to be determined as deemed appropriate by the Society.

5 When cargo likely to cause shear buckling is intended to be carried on a hatch cover, the net thickness t_{net} (mm) is not to be less than that obtained from the following formulae. In such cases, "cargo likely to cause shear buckling" refers particularly to large or bulky cargo lashed to the hatch cover, such as parts of cranes or wind power stations, turbines, etc. Cargo that is considered to be uniformly distributed over the hatch cover (e.g. timber, pipes or steel coils) does not need to be considered.

$t_{net} = 6.5s \times 10^{-3}$

s : As specified in **-1** above

Fig. 14.6.5-1 Determination of the Normal Stress of Hatch Cover Plating

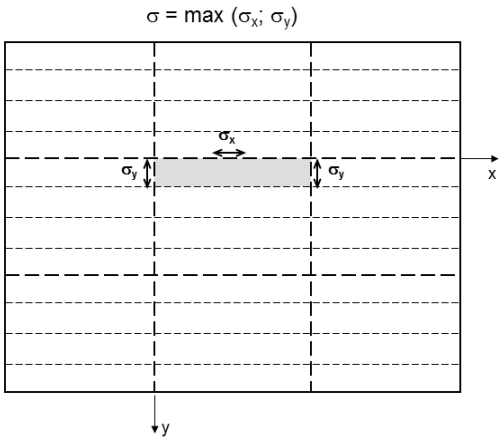

14.6.5.3 Net scantling of Hatch Covers

1 The net section modulus Z_{net} of the stiffeners of hatch cover top plates, based on stiffener net member thickness, is not to be less than that obtained from the following formula. The net section modulus of the stiffeners is to be determined based on an attached plate width that is assumed to be equal to the stiffener spacing.

$$Z_{net} = \frac{Ps\ell^2}{f_{bc}\sigma_a} \ (cm^3)$$

ℓ : Stiffener span (m) is to be taken as the spacing of primary supporting members or the distance between a primary supporting member and the edge support, as applicable. When brackets are fitted at both ends of all stiffener spans, the stiffener span may be reduced by an amount equal to 2/3 of the minimum brackets arm length, but not greater than 10% of the gross span, for each bracket.

s : Stiffener spacing (mm)

P : Design load (kN/m^2) as specified in **14.6.5.2-1** above

σ_a : Permissible stress (N/mm^2) specified in **Table 14.6.5-1**

f_{bc}: Boundary coefficient of stiffener, taken equal to:

f_{bc} = 12, in the case of stiffener clamped at both ends.

f_{bc} = 8, in the case of stiffener simply supported at both ends or simply supported at one end and clamped at the other end

2 The net shear sectional area A_{net} (cm^2) of the stiffener webs of hatch cover top plates is not to be less than that obtained from the following formula:

$$A_{net} = \frac{8.7SPs\ell}{\sigma_a} 10^{-3} \ (cm^2)$$

ℓ, s and P : As specified in **-1** above

3 Stiffeners parallel to primary supporting members are to be continuous at crossing primary supporting member and may be regarded for calculating the cross sectional properties of primary supporting members.

4 The combined stress of those stiffeners induced by the bending of primary supporting members and lateral pressures is not to exceed the permissible stresses according to **14.6.5.1-1**.

5 For hatch cover stiffeners under compression, sufficient safety against lateral and torsional buckling according to **14.6.5.6** is to be verified.

6 For stiffeners of the lower plating of double skin hatch covers, the requirements in **-1** and **-2** above do not need to be applied due to the absence of lateral loads and the requirements in **14.6.5** do not need to be applied to stiffeners in cases where the lower plating is not considered to be a strength member.

7 The net thickness (mm) of a stiffener (except for U-type stiffeners) web is not to be taken as less than 4 mm.

14.6.5.4 Primary supporting members of steel hatch covers

1 Scantlings of the primary supporting members of steel hatch covers are to be determined according to **14.6.5.1-1** below taking into consideration the permissible stresses specified in **14.6.5.5**.

2 In addition to **-1** above, the scantlings of the primary supporting members of steel hatch covers are to comply with the requirements specified in **14.6.5.6**.

3 In addition to **-1** and **-2** above, net thickness t_{net} (mm) of the webs of primary supporting members is not to be less than that obtained from the following formulae, whichever is greater:

$$t_{net} = 6.5s \times 10^{-3}$$

$$t_{net} = 5$$

s : Stiffener spacing (mm)

4 In addition to **-1** to **-3** above, the net thickness t_{net} (mm) of edge girders exposed to sea wash is not to be less than that obtained from the following formulae, whichever is greater:

$$t_{net} = 0.0158s\sqrt{\frac{P_A}{0.95\sigma_Y}}$$

$$t_{net} = 8.5s \times 10^{-3}$$

P_A : Design horizontal wave load (kN/m^2) as specified in **4.10.2.2-1**

s : Stiffener spacing (mm)

σ_Y : Minimum yield stress (N/mm^2) of the material

14.6.5.5 Strength calculation

1 Strength calculation for hatch covers is to be carried out by using the following finite element method. Those not specified in **14.6.5.5** are to comply with the requirements in **Chapter 8**.

(1) Loads

(a) The loads acting on steel hatch covers are to be according to **4.10** based on the type of load and loading condition. Except as deemed necessary by the Society, no loads are to be assumed to act jointly.

(b) No dynamic loads due to ship motion are to be assumed as the wheel loads from wheeled vehicles only used for loading/unloading while in port.

(2) Modelling of Structures

(a) The structural model is to be able to reproduce the behavior of the structure with the highest possible fidelity. Stiffeners and primary supporting members subject to pressure loads are to be included in the modelling. However, buckling stiffeners may be disregarded for stress calculation.

(b) Net scantlings which exclude corrosion additions are to be used for modelling.

(c) In no case is element width to be larger than stiffener spacing. The ratio of element length to width is not to exceed 3.

(d) The element height of the webs of primary supporting members is not to exceed one-third of the web height.

(e) Stiffeners may be modelled using shell elements, plane stress elements or beam elements.

(f) Hatch covers fitted with U-type stiffeners as shown in **Fig. 14.6.5-2** are to be assessed by means of FE analysis.

(g) The geometry of the U-type stiffeners is to be accurately modelled using shell/plate elements.

(h) Nodal points are to be properly placed on the intersections between the webs of a U-type stiffener and the hatch cover plate, and between the webs and flange of the U-type stiffener.

(3) Boundary Conditions

Wherever applicable the following boundary conditions are to be applied to the FE model:

(a) Boundary nodes in way of a bearing pad on the hatch coamings are to be fixed against displacement in the direction perpendicular to the pad.

(b) Lifting stoppers are to be fixed against displacements in the direction determined by the stoppers.

(c) For a folding type hatch cover, the FE nodes connected through a hinge are to have the same translational displacement in the direction perpendicular to the hatch cover top plating.

2 In addition to **-1**, the details for steel hatch covers carrying cargoes are to comply with the following **(1)** to **(6)**:

(1) To prevent damage to hatch covers and the ship structure, the location of stoppers is to be compatible with the relative movements between hatch covers and the ship structure.

(2) Hatch covers and supporting structures are to be adequately stiffened to accommodate the load from hatch covers.

(3) At the cross-joints of multi-panel covers, vertical guides (male/female) are to be fitted to prevent excessive relative vertical deflections between loaded/unloaded panels.

(4) The construction and scantlings of hatchways on exposed parts or on the lower deck are to comply with the following requirements in addition to those of **14.6**.

(a) The loading arrangement is to be clearly shown in drawings submitted for approval. In the case of freight containers, the type and location are to be additionally described.

(b) Girders or stiffeners are to be provided for reinforcement beneath the corner fittings of freight containers.

(5) The scantlings of sub structures subject to concentrated loads acting on steel hatch covers are to be determined taking into consideration the design cargo loads and permissible stresses specified in **14.6**.

(6) The scantlings of top plates and stiffeners of steel hatch covers subject to wheel loads may be determined by finite element method or in accordance with **10.1, Part 2-6**

Fig. 14.6.5-2 Example of Hatch Cover Fitted with U-type Stiffeners

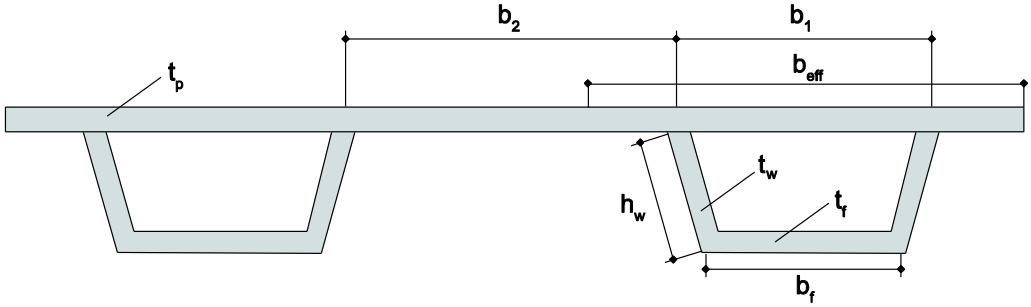

14.6.5.6 Buckling strength of steel hatch covers

1 Buckling assessments for hatch cover structural members are to be performed in compliance with **Annex 14.6 "Buckling Strength Assessment of Ship Structural Elements"** for the conditions specified in **14.6.5.6**. For symbols not defined in **14.6.5.6**, refer to **Annex 14.6**.

2 Slenderness requirements are as follows:

(1) The slenderness requirements are to be in accordance with **An2, Annex 14.6**.

(2) Slenderness requirements need not be applied to the lower boundary of double skin hatch covers unless the cargo hold is designed for carriage of ballast or liquid cargo.

(3) The breadth of the primary supporting member flange is to be not less than 40% of their depth for laterally unsupported spans greater than 3.0 *m*. However, tripping brackets attached to the flange may be considered as a lateral support for primary supporting members.

3 Buckling assessments are to be performed for the following structural elements of hatch cover structures subjected to compressive stresses, shear stresses and lateral pressures:

- Stiffened and unstiffened panels, including curved panels and panels stiffened with U-type stiffeners.
- Web panels of primary supporting members in way of openings.

Procedures and detailed requirements for buckling assessment are given in **An4, Annex 14.6**, including idealisation of irregular plate panels, definitions of reference stresses and buckling criteria.

4 Panel types and assessment methods are to be accordance with the following requirements:

(1) Plate panels of hatch cover structures are to be modelled as stiffened panels (*SP*) or unstiffened panels (*UP*) as defined in **An 4.2, Annex 14.6**. In addition, Method A (-A) and Method B (-B) as defined in **An1.3, Annex 14.6** are to be used in accordance with **Table 14.6.5-2**, **Fig. 14.6.5-3** and **Fig. 14.6.5-4**, while the procedures for openings are to be used for buckling assessments of web panels with openings.

(2) Hatch covers fitted with U-type stiffeners are also to be in accordance with the additional buckling assessment requirements specific for panels with U-type stiffeners in **An5.2.5, Annex 14.6**.

5 Buckling assessments of hatch covers are based on lateral pressure as defined in **4.10.2.1** and **4.10.2.2**, and stresses obtained from FE analyses (*See* **14.6.5.5**).

6 The safety factor for hatch cover structural members is to be taken as S=1.0 for the plating and stiffener buckling capacity formulae defined in **An5.2.2** and **An5.2.3**, **Annex 14.6**, respectively.

7 The buckling strength of structural members is to be in accordance with the following formula:

$\eta_{act} \leq \eta_{all}$

Where:

η_{act}: Buckling utilisation factor based on applied stress, as defined in **An1.3.2.2** and **An4, Annex 14.6**, and calculated per **An5, Annex 14.6**

η_{act}: Allowable buckling utilisation factor, as given in **Table 14.6.5-3**

Table 14.6.5-2 Structural Members and Assessment Methods

Structural elements	Assessment method(1)(2)	Normal panel definition
Hatch cover top/bottom plating structures, see **Fig. 14.6.5-3**		
Hatch cover top/bottom plating	SP-A	Length: between transverse girders Width: between longitudinal girders
Irregularly stiffened panels	UP-B	Plate between local stiffeners/PSM
Hatch cover web panels of primary supporting members, see **Fig. 14.6.5-4**		
Web of transverse/longitudinal girder (single skin type)	UP-B	Plate between local stiffeners/face plate/PSM
Web of transverse/longitudinal girder (double skin type)	SP-B(3)	Length: between PSM Width: full web depth
Web panel with opening	Procedure for opening	Plate between local stiffeners/face plate/PSM
Irregularly stiffened panels	UP-B	Plate between local stiffeners/face plate/PSM

Note 1: SP and UP stand for stiffened and unstiffened panel respectively.

Note 2: A and B stand for Method A and Method B respectively.

Note 3: In case that the buckling carlings/brackets are irregularly arranged in the web of transverse/longitudinal girder, UP-B method may be used.

Fig. 14.6.5-3 Hatch Cover Top/Bottom Plating Structures

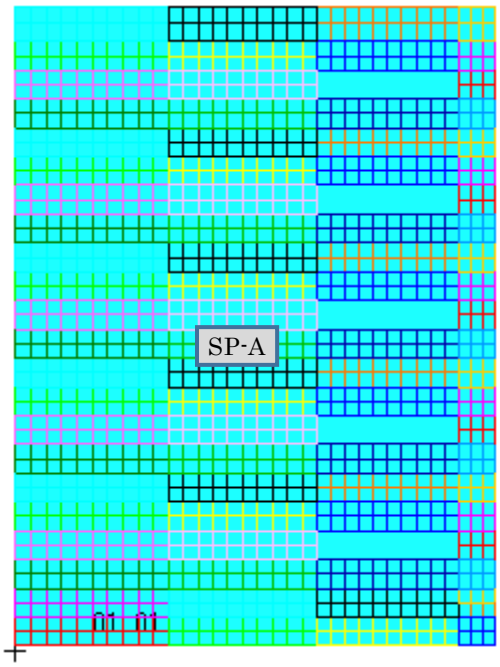

Fig. 14.6.5-4 Hatch Cover Webs of Primary Supporting Members

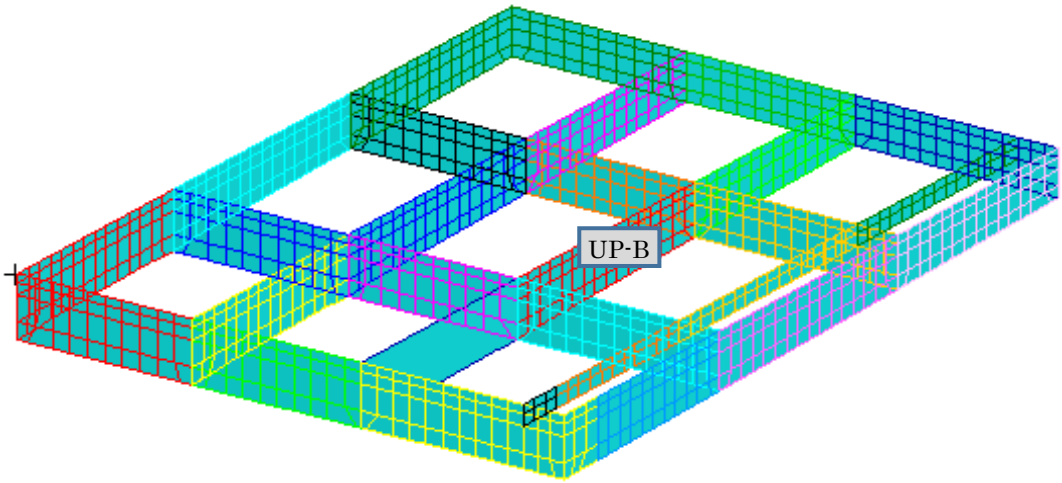

Table 14.6.5-3 Allowable Buckling Utilisation Factors

Structural component	Subject to	η_{all}, Allowable buckling utilisation factor
Plates and stiffeners Web of PSM	External pressure, as defined in **4.10.2.1**	0.80
	Other loads, as defined in **4.10.2.2** to **4.10.2.5**	0.90 for static+dynamic load case 0.72 for static load case

14.6.7 Portable Beams, Hatchway Covers, Steel Pontoon Covers and Steel Weathertight Covers

14.6.7.1 Portable beams

1 The carriers and sockets for portable beams are to be of substantial construction, having a minimum beaming surface of 75 *mm*, and are to be provided with means for the efficient fitting and securing of the beams.

2 Coamings are to be stiffened in way of carriers and sockets by providing stiffeners from these fittings to the deck or by equivalent strengthening.

3 Where beams of a sliding type are used, the arrangement is to ensure that the beams remain properly in position when the

hatchway is closed.

4 The depth of portable beams and the width of their face plates are to be suitable to ensure the lateral stability of the beams. The depth of beams at their ends is not to be less than $1/2.5$ times the depth at their mid-point or 150 *mm*, whichever is greater.

5 The upper face plates of portable beams are to extend to the ends of the beams. The web plates are to be increased in thickness to at least twice that at the mid-point for at least 180 *mm* from each end or to be reinforced with doubling plates.

6 Portable beams are to be provided with suitable gear for releasing them from slings without the need for personnel to get on the beam.

7 Portable beams are to be clearly marked to indicate the deck, hatchway and position to which they belong.

8 Scantling of hatch beam with variable cross-sections is to be not less than that obtained from the following formulae.

The net section modulus (cm^3) of hatch beams at the mid-point

$$Z_{net} = Z_{net_{cs}}$$

$$Z_{net} = k_1 Z_{net_{cs}}$$

The net moment of inertia (cm^4) of hatch beams at the mid-point

$$I_{net} = I_{net_{cs}}$$

$$I_{net} = k_2 I_{net_{cs}}$$

$Z_{net_{cs}}$: Net section modulus (cm^3) complying with requirement **14.6.5.4-1**

$I_{net_{cs}}$: Net moment of inertia (cm^4) complying with requirement **14.6.5.4-1**

S : Spacing (m) of portable beams

ℓ : Unsupported span (m) of portable beams

b : Width (m) of steel hatch covers

k_1 and k_2 : Coefficients obtained from the formulae given in **Table 14.6.7-1**

Table 14.6.7-1 Coefficient k_1 and k_2

k_1	$1 + \dfrac{3.2\alpha - \gamma - 0.8}{7\gamma + 0.4}$	k_1 is not to be taken as less than 1.0 $\alpha = \dfrac{\ell_1}{\ell}$, $\beta = \dfrac{I_1}{I_0}$, $\gamma = \dfrac{Z_1}{Z_0}$
k_2	$1 + 8\alpha^3 \dfrac{1-\beta}{0.2 + 3\sqrt{\beta}}$	

ℓ : Overall length of hatch beam (m)

ℓ_1 : Distance from the end of parallel part to the end of portable beam (m)

I_0 : Moment of inertia at mid-span (cm^4)

I_1 : Moment of inertia at ends (cm^4)

Z_0 : Section modulus at mid-span (cm^3)

Z_1 : Section modulus at ends (cm^3)

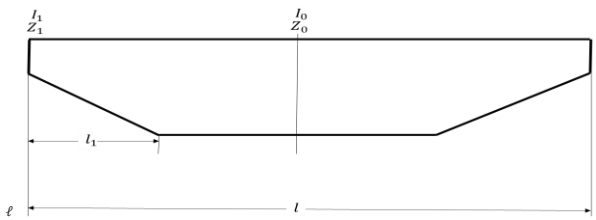

14.6.7.2 Hatchway covers

1 Hatch rests are to be provided with at least a 65 *mm* bearing surface and are to be bevelled, if required, to suit the slope of the hatchways.

2 Hatchway covers are to be provided with suitable hand grips according to their weight and size, except where such grips are unnecessary due to the cover's construction.

3 Hatchway covers are to be clearly marked to indicate the deck, hatchway and position to which they belong.

4 The wood for hatchway covers is to be of good quality, straight grained and reasonably free from knots, sap and shakes.

5 The ends of all wood covers are to be protected by an encircling steel band.

14.6.7.3 Steel pontoon covers

1 The depth of steel pontoon covers at the supports is not to be less than one-third the depth at the mid-point or 150 *mm*, whichever is greater.

2 The width of the bearing surfaces for steel pontoon covers is not to be less than 75 *mm*.

3 Steel pontoon covers are to be clearly marked to indicate the deck, hatchway and position to which they belong.

14.6.7.4 Steel Weathertight Hatch Covers

The depth of steel weathertight covers at the supports is not to be less than one-third the depth at the mid-point or 150 *mm*, whichever is greater.

14.6.8 Tarpaulins and Securing Arrangements for Hatchways Closed by Portable Covers

14.6.8.1 General

1 At least two layers of tarpaulins of Grade A complying with the requirements in **Chapter 6, Part L** are to be provided for each exposed hatchway on the freeboard or superstructure decks and at least one layer of such a tarpaulin is to be provided for each exposed hatchway elsewhere.

2 Battens are to be efficient for securing the tarpaulins and not to be less than 65 *mm* in width and 9 *mm* in thickness.

3 Wedges are to be of tough wood or other equivalent materials. They are to have a taper not more than 1/6 and not to be less than 13 *mm* in thickness at the point.

4 Cleats are to be set to fit the taper of the wedges. They are to be at least 65 *mm* wide and to be spaced not more than 600 *mm* from centre to centre; the cleats along each side are to be arranged not more than 150 *mm* apart from the hatch corners.

5 For all hatchways in exposed freeboard and superstructure decks, steel bars or other equivalent means are to be provided in order to efficiently secure each section of the hatchway cover after the tarpaulins are battened down. Hatchway covers of more than 1.5 *m* in length are to be secured by at least two such securing appliances. At all other hatchways in exposed positions on weather decks, ring bolts or other suitable fittings for lashing are to be provided.

14.6.9 Hatch Coaming Strength Criteria

14.6.9.1 Height of coamings

1 Height of coamings above the upper surface of the deck is to be at least 600 *mm* in Position 1 and 450 *mm* in Position 2.

2 For hatchways closed by weathertight steel hatch covers, the height of coamings may be reduced from that prescribed in **-1** or omitted entirely subject to the satisfaction of the Society.

3 The height of hatchway coamings other than those provided in exposed portions of the freeboard or superstructure decks is to be to the satisfaction of the Society having regard to the position of hatchways or the degree of protection provided.

14.6.9.2 Scantlings of hatch coamings

1 The local net plate thickness of the hatch coaming plating $t_{coam,net}$ is not to be less than that obtained from following formula in **(1)** or **(2)**:

(1) For Type 1 ships

$$t_{coam,net} = 0.0142s\sqrt{\frac{P_A}{0.95\sigma_Y}}\ (mm), \quad \text{but not to be less than } 6+\frac{L_{C300}}{100}\ (mm)$$

s : Stiffener spacing (mm)

P_A : As specified in **4.10.2.2-1**

σ_Y : Minimum yield stress (N/mm^2) of the material

(2) For Type 2 ships

$$t_{coam,net} = 0.016s\sqrt{\frac{P_{coam}}{0.95\sigma_Y}}\ (mm), \quad \text{but not to be less than } 9.5\ (mm)$$

P_{coam} : As specified in **4.10.2.2-2**

s, σ_Y : As specified in **(1)** above

2 For Type 1 ships, where the hatch coaming stiffener is snipped at both ends, the gross thickness $t_{coam,gross}$ (mm) of the coaming plate at the sniped stiffener end is not to be less than that obtained from the following formula:

$$t_{coam,gross} = 19.6\sqrt{\frac{P_A s(\ell - 0.0005s)}{1000\sigma_Y}}\ (mm)$$

ℓ : stiffener span (m) to be taken as the spacing of coaming stays

s, P_A *and* σ_Y : As specified in **-1** above

3 The net section modulus Z_{net} (cm^3) and net shear area A_{net} (cm^2) of hatch coaming stiffeners are not to be less than that obtained from the following formula.

(1) For Type 1 ships

$$Z_{net} = \frac{P_A s \ell^2}{f_{bc}\sigma_Y} \quad (cm^3)$$

$$A_{net} = \frac{P_A s \ell}{\sigma_Y} 10^{-2} \quad (cm^2)$$

s, ℓ, P_A *and* σ_Y : As specified in **-2** above

f_{bc} : Coefficient according to the type of end connection of stiffeners given by the following formula:

f_{bc} = 12 with both ends constant

= 8 for the end spans of stiffeners sniped at the coaming corners

For sniped stiffeners of coaming at hatch corners shear area obtained from the above formula has to be increased by 35%.

(2) For Type 2 ships

$$Z_{net} = 1.21\frac{P_{coam} s \ell^2}{f_{bc} c_p \sigma_Y} \quad (cm^3)$$

f_{bc} : Coefficient according to the type of end connection of stiffeners given by the following formula:

f_{bc} = 16 with both ends constant

= 12 for the end spans of stiffeners sniped at the coaming corners

c_p = Ratio of the plastic section modulus to the elastic section modulus of the stiffeners with an attached plate breadth (mm) equal to $40t_{coam,net}$, where $t_{coam,net}$ is the plate net thickness

= 1.16 in the absence of more precise evaluation

s, ℓ, *and* σ_Y : As specified in **-2** above

P_{coam} : As specified in **4.10.2.2-2**

4 Buckling strength assessment of hatch coaming is to be carried out by the method as deemed appropriate by the Society.

5 The net scantlings of hatch coaming stays are to be in accordance with following **(1)** to **(3)** and coaming stays are to be designed for the loads transmitted through them and permissible stresses according to **14.6.5.1**.

(1) For hatch coaming stays considered to be simple beams (*See* **Examples 1 and 2 of Fig. 14.6.9-1**), the net section modulus Z_{net} (cm^3) of such stays at their deck connections and the net scantling $t_{w,net}$ (mm) of their webs are not to be less than that obtained from following formulae:

$$Z_{net} = \frac{H_C{}^2 s_C P}{1.9\sigma_Y} \quad (cm^3)$$

$$t_{w,net} = \frac{2H_C s_C P}{\sigma_Y h} \quad (mm)$$

H_C : Hatch coaming stay height (m)

h : Hatch coaming stay depth (mm)

s_C : Hatch coaming stay spacing (mm)

σ_Y : As specified in **-1** above

P : Pressure (kN/m^2) on coaming taken as P_A defined in **4.10.2.2-1** for Type 1 ships and as P_{Coam} defined in **4.10.2.2-2** for Type 2 ships.

(2) For coaming stays other than those in **(1)** above (*See* **Example 3 of Fig.14.6.9-1**), stresses are generally to be determined through finite element method, and the calculated stresses are to satisfy the permissible stress criteria of **14.6.5.1**.

(3) For calculating the net section modulus of coaming stays, the area of their face plates is to be taken into account only when it is welded with full penetration welds to the deck plating and an adequate underdeck structure is fitted to support the stresses transmitted by them.

Fig. 14.6.9-1 Examples of Coaming Stays

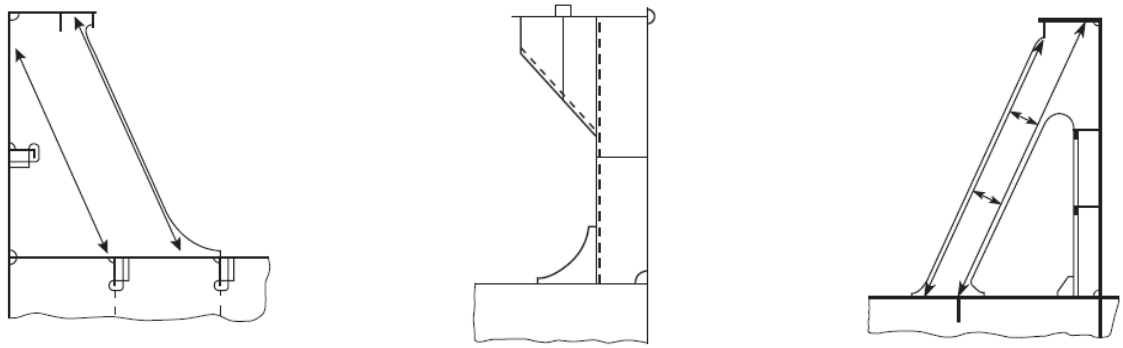

Example1 Example2 Example3

14.6.9.3 Structure of the Hatch Coaming

1 Coamings are to be additionally supported by efficient brackets or stays provided from the horizontal stiffeners to the deck at intervals of approximately 3 *m*.

2 Coaming plates are to extend to the lower edge of the deck beams or hatch side girders are to be fitted that extend to the lower edge of the deck beams (*See* **Fig. 14.6.9-2**). Extended coaming plates and hatch side girders are to be flanged or fitted with face bars or half-round bars, except where specially approved by the Society.

3 The structure and scantlings of small hatch coamings may be given special consideration in regards to the requirements in **14.6.9.1** to **14.6.9.2** and **-1** and **-2** above.

4 Hatch coamings and hatch coaming stays are to comply with the following detail requirements:

(1) The local details of the structures are to be designed so as to transfer pressures on the hatch covers to the hatch coamings and, through them, to the deck structures below. Hatch coamings and supporting structures are to be adequately stiffened to accommodate the loading from hatch covers, in longitudinal, transverse and vertical directions.

(2) Underdeck structures are to be checked against the load transmitted by the stays.

(3) Double continuous welding is to be adopted for the connections of stay webs with deck plating and the weld throat is to be not less than $0.44t_{w,gross}$, where $t_{w,gross}$ is the gross thickness of the stay web.

(4) The toes of stay webs are to be connected to deck plating with deep penetration double bevel welds extending over a distance not less than 15% of the stay width.

(5) On ships carrying cargoes such as timber, coal or coke on deck, stays are to be spaced not more than 1.5 *m* apart.

(6) Hatch coaming stays are to be supported by appropriate substructures.

(7) For hatch coamings that transfer friction forces at hatch cover supports, special consideration is to be given to fatigue strength.

(8) Longitudinal hatch coamings with a length exceeding $0.1L_C$ are to be provided with tapered brackets or equivalent transitions and a corresponding substructure at both ends. At the end of the brackets, they are to be connected to the deck by full penetration welds of minimum 300 *mm* in length.

(9) Hatch coamings and horizontal stiffeners on hatch coamings may be considered as a part of the longitudinal hull structure when designed according to the requirements for longitudinal strength and verified in cases deemed appropriate by the Society.

(10) Unless otherwise specified, the material and welding requirements for hatch coamings are to comply with the requirements of other Parts of the Rules.

Fig. 14.6.9-2 Example for the Extension of Coaming Plates

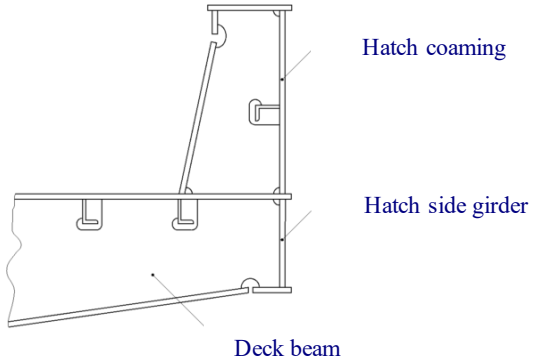

14.6.10 Closing Arrangements

14.6.10.1 Securing devices

1 Securing devices between covers and coamings and at cross-joints are to ensure weathertightness.

2 The means for securing and maintaining weathertightness by using gaskets and securing devices are to comply with the following **(1)** to **(6)**. The means for securing and maintaining weathertightness of weathertight covers are to be to the satisfaction of the Society. Arrangements are to ensure that weathertightness can be maintained in any sea condition.

(1) The weight of covers and any cargo stowed thereon are to be transmitted to the ship structure.

(2) Gaskets and compression flat bars or angles which are arranged between covers and the ship structure and cross-joint elements are to be in compliance with the following **(a)** to **(d)**:

(a) Compression bars or angles are to be well rounded where in contact with the gaskets and are to be made of corrosion-resistant materials.

(b) The gaskets are to be of relatively soft elastic materials. The material is to be of a quality suitable for all environmental conditions likely to be experienced by the ship, and is to be compatible with the cargoes carried.

(c) A continuous gasket is to be effectively secured to the cover. The material and form of gasket selected are to be considered in conjunction with the type of cover, the securing arrangement and the expected relative movement between the cover and ship structure.

(d) The specification or grade of the packing material is to be indicated on the drawings.

(3) Securing devices attached to hatchway coamings, decks or covers are to be in compliance with the following **(a)** to **(f)**:

(a) Arrangement and spacing of securing devices are to be determined with due attention to the effectiveness for weathertightness, depending upon the type and the size of hatch cover as well as to the stiffness of the cover edges between the securing devices.

(b) The moment of inertia (cm^4) of the edge elements of hatch covers is not to be less than that obtained from the following formula:

$I = 6pa^4$ (cm^4)

a : Spacing (m) between securing devices, not to be taken less than 2 m

p : Packing line pressure (N/mm), minimum 5 N/mm

(c) The gross sectional area (cm^2) of each securing device is not to be less than that obtained from the following formula. However, rods or bolts are to have a net diameter not less than 19 mm for hatchways exceeding 5 m^2 in area.

$A = 0.28ap/f$ (cm^2)

f : As obtained from the following formula:

$f = (\sigma_Y/235)^e$

σ_Y : Minimum yield stress (N/mm^2) of the steel used for fabrication, but not to be taken greater than 70% of the ultimate tensile strength

e : A coefficient determined according to the value of σ_Y, as follows

1.0 for $\sigma_Y \leq 235\,N/mm^2$

0.75 for $\sigma_Y > 235\,N/mm^2$

a and p : As specified in **(b)** above

(d) Individual securing devices on each cover are to have approximately the same stiffness characteristics.

(e) Where rod cleats are fitted, resilient washers or cushions are to be incorporated.

(f) Where hydraulic cleating is adopted, a positive means is to be provided to ensure that it remains mechanically locked in the closed position in the event of failure of the hydraulic system.

(4) A drainage arrangement equivalent to the standards specified in the following is to be provided.

(a) Drainage is to be arranged inside the line of gaskets by means of a gutter bar or vertical extension of the hatch side and end coaming. If an application is made by the owner of a container carrier and the Society deems it to be appropriate, special consideration will be given to this requirement.

(b) Drain openings are to be arranged at the ends of drain channels and are to be provided with effective means such as non-return valves or the equivalent for preventing the ingress of water from outside. It is unacceptable to connect fire hoses to the drain openings for this purpose.

(c) Cross-joints of multi-panel covers are to be arranged with a drainage channel for water from space above the gasket and a drainage channel below the gasket.

(d) If a continuous outer steel contact between cover and ship structure is arranged, drainage from the space between the steel contact and the gasket is also to be provided for

(e) Drain openings in hatch coamings are to be arranged with sufficient distance to areas of stress concentration (e.g. hatch corners, transitions to crane posts).

(5) It is recommended that ships with steel weathertight covers are supplied with an operation and maintenance manual which includes the following **(a)** to **(e)**:

(a) Opening and closing instructions

(b) Maintenance requirements for packing, securing devices and operating items

(c) Cleaning instructions for drainage systems

(d) Corrosion prevention instructions

(e) List of spare parts

(6) Securing devices of special design in which significant bending or shear stresses occur may be designed as anti-lifting devices according to **14.6.10.2** below. The packing line pressure q is to be specified, and as load, q multiplied by the spacing between securing devices a (m) is to be applied.

14.6.10.2 Loading Cargo on Hatch Cover

1 The securing devices of hatch covers, on which cargo is to be lashed, are to be designed for a lifting force resulting from the loads. Unsymmetrical loading, which may occur in practice, is to be considered. Under such loading, the equivalent stress σ_E (N/mm^2) in securing devices is not to be greater than that obtained from the following formula.

$$\sigma_E = \frac{150}{k_l}$$

k_l : As obtained from the following formula:

$$k_l = \left(\frac{235}{\sigma_Y}\right)^e$$

σ_Y : Minimum yield stress (N/mm^2) of the material

e : As given below:

0.75 for $\sigma_Y > 235$

1.00 for $\sigma_Y \leq 235$

2 Notwithstanding the requirement in **-1**, where the height h_E (mm) of the transverse cover guides above the hatch cover supports is not less than that obtained from the following formula, Anti-lifting devices may be dispensed. (*See* **Fig. 14.6.10-2**) However, in no case is h_E to be less than the height of the hatch side girder plus 150mm.

$$h_E = 1.75\sqrt{2se + d^2} - 0.75d$$

e : Largest distance (mm) from the inner edges of the transverse cover guides to the ends of the cover edge plate

s : Total clearance (mm) within the transverse cover guide, with $10 \leq s \leq 40$ (mm)

d : Distance between the upper edge of transverse stopper and the hatch cover supports (mm)

Fig. 14.6.10-2 Height of Transverse Cover Guides

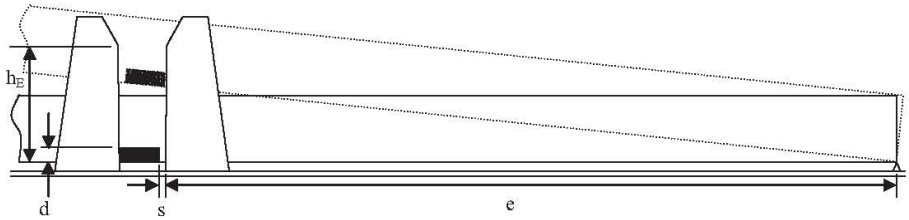

14.6.11 Hatch Cover Supports, Stoppers and Supporting Structures

14.6.11.1

1 Hatch cover supports, stoppers and supporting structures subject to the requirements of **14.6** are to comply with the following **(1)** and **(2)**:

(1) Stress in the stoppers is to comply with the criteria specified in **14.6.5.1-1**.

(2) The details of hatch cover supporting structures are to be in accordance with the following **(a)** to **(d)**:

(a) Where large relative displacements of the supporting surfaces are to be expected, the use of material having low wear and frictional properties is recommended.

(b) Drawings of the supports are to be submitted. In these drawings, the permitted maximum pressure given by the material manufacturer is to be specified.

(c) Stresses in supporting structures are to comply with the criteria specified in **14.6.5.1-1**.

(d) For substructures and adjacent constructions of supports subjected to horizontal forces P_h, special consideration is to be given to fatigue strength.

2 For steel weathertight hatch covers of Type 2 ships, effective means for stoppers complying with the requirements in **Table 14.6.11-2** against the horizontal green sea forces acting on them are to be provided.

Table 14.6.11-2 Strength Requirements for Stoppers

Design pressure	As specified in **4.10.6**.
Allowable equivalent stress	In stoppers, their supporting structures and the stopper welds (calculated at the throat of welds), the equivalent stress is not to exceed the allowable value of 0.8 times the yield stress of the material.

14.6.12 Steel Hatchway Covers for Container Carriers

14.6.12.1 Application

1 In the application of the requirements of **14.6** of the Rules, the height of coamings above the upper surface of the deck where the hatchway covers are fitted is to be at least 600 mm.

2 For container carriers with unusually large freeboards, upon requests by the applicant for classification, gaskets and securing devices for steel hatchway covers may be suitably dispensed in accordance with the requirements in **(1)** to **(4)**:

(1) The hatchway covers concerned are to be fitted to hatchways located on weatherdecks which are at least two standard superstructure heights (as per Regulation 33 of the "International Convention on Load Lines, 1966") above an actual freeboard deck or an assumed freeboard deck from which the freeboard can be calculated which will result in a draught not less than that corresponding to the freeboard actually assigned. Where any part of a hatchway is forward of a point located one quarter of the ship's length ($0.25L_f$) from the forward perpendicular, that hatchway is to be located on a weatherdeck at least three standard superstructure heights above the actual or assumed freeboard deck.

(2) The non-weathertight gaps between hatch cover panels are to be considered as unprotected openings in the application of **Part U** and **2.3**. They are to be as small as possible commensurate with the capacity of the bilge system and expected water ingress, and the capacity and operational effectiveness of the fixed gas fire-extinguishing system required in **Part R** of the Rules, and are not to be more than 50 mm.

(3) Labyrinths, gutter bars, or other equivalent means are to be fitted close to the edges of each panel in way of the gaps to minimize

the amount of water that can enter the container hold from the top surface of each panel. In general, the height of such means is not to be less than 65 *mm* from the top of the coaming and gutter bars or from the top of the panel, and the gaps between hatch covers and the top of the coaming are not to exceed 10 *mm*. (*See* **Fig. 14.6.12-1**)

(4) Bilge alarms are to be provided in each hold fitted with non-weathertight covers.

3 Treatment of towage and segregation of containers containing dangerous goods may be in accordance with the relevant requirements specified in MSC/Circ.1087.

Fig. 14.6.12-1 Arrangement of Labyrinth (Example)

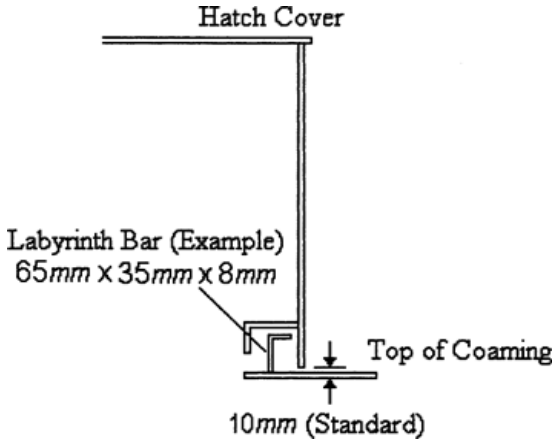

14.6.13 Steel Hatchway of Ballast Holds

14.6.13.1 General

1 Gross scantlings of steel hatchway covers and similar covers as well as hatch coamings provided on exposed upper decks in way of cargo holds used as deep water ballast tanks for ships are to comply with the following requirements. Special consideration is to be given to steel hatchway covers and similar covers as well as hatch coamings specified in **14.6.13.1** in order to ensure they are of sufficient strength to resist loads due to water ballast.

(1) The thickness of top plating is not to be less than that obtained from the following formula. However, in the case of double plating type hatch covers, only the plates that actually bear the load need comply.

$1.15s\sqrt{h}\times 10^{-3}+3.0\ (mm)$

s : Spacing (mm) of stiffeners

h : As obtained from **4.10.3.1-1(1)** (kN/m^2)

(2) The scantlings of stiffeners are to comply with the following formulae.

Section modulus at mid-span : $C_1Kk_1sh\ell^2\times 10^{-3}$ (cm^3)

Moment of inertia at mid-span : $C_2k_2sh\ell^3\times 10^{-3}$ (cm^4)

Cross sectional area of web plates at the ends of stiffeners : $C_3Ksh\ell\times 10^{-3}$ (cm^2)

s : As specified in **(1)**

ℓ : Span of stiffener (m)

C_1, C_2 *and* C_3 : Coefficients given by **Table 14.6.13-1**

K : Coefficient corresponding to the kind of steel as specified in **3.2**

k_1 and k_2 : Coefficient given by **Table 14.6.13-1**

h : As obtained from **4.10.3.1-1(2)** according to the arranged direction of stiffeners (kN/m^2)

(3) Thicknesses and depths of the webs of girders are not to be less than 7 *mm* and ℓ /25 (where ℓ is the span of girder (m)), respectively. The girders are to be provided with tripping brackets at intervals of about 3 *m*.

(4) Construction and scantlings of hatchway coamings are also to comply with the requirements of the ballast hold, in addition to **14.6**.

2 Where scantlings of structural members of steel hatch covers are determined based upon finite element method, the scantlings are determined in accordance with **14.6.5** using the load specified in **4.10.3.1-2**.

Table 14.6.13-1 Coefficients C_1, C_2 *and* C_3

C_1	C_2	C_3
1.07	1.81	0.064

14.7 Small Hatchway

14.7.1 Small Hatches Fitted on Exposed Fore Deck

14.7.1.1 General

1 These requirements apply to small hatchways (generally openings 2.5 m^2 or less) on the exposed deck within 0.25 L_C from the FP and located at a height less than 0.1L_C or 22 m, whichever is less, from the summer load water line at the location of the hatch.

2 Notwithstanding the requirements in **-1**, hatchways designed for emergency escape need not comply with the requirements of **14.7.1.3(a)**, **(b)**, **14.7.1.4-3** and **14.7.1.5**.

3 The securing devices of the hatchways for emergency escape are to be of a quick-acting type (e.g. one action wheel handles are provided as central locking devices for latching/unlatching of hatch cover) operable from both sides of the hatch cover.

14.7.1.2 Strength

1 For small rectangular steel hatch covers, the gross plate thickness, stiffener arrangement and scantlings are to be not less than those obtained, in mm, from **Table 14.7.1-1** and **Fig. 14.7.1-2**.

Stiffeners, where fitted, are to be aligned with the metal-to-metal contact points, required in, **14.7.1.4-1**. (*See* **Fig. 14.7.1-2**) Primary stiffeners are to be continuous. All stiffeners are to be welded to the inner edge stiffener. (*See* **Fig. 14.7.1-1**)

Table 14.7.1-1 Scantlings for Small Steel Hatch Covers on the Fore Deck

Nominal size (mm)	Cover plate thickness (mm)	Primary stiffeners	Secondary stiffeners
		Flat Bar ($mm \times mm$) ;number	
630× 630	8	-	-
630× 830	8	100 × 8 · 1	-
830× 630	8	100 × 8 · 1	-
830× 830	8	100 × 10 · 1	-
1030× 1030	8	120 × 12 · 1	80 × 8 · 2
1330× 1330	8	150 × 12 · 2	100 × 10 · 2

2 For rectangular hatchways, the upper edge of hatchway coamings is to be suitably reinforced by a horizontal section, normally not more than 170 mm to 190 mm from the upper edge of the coamings.

3 For small hatch covers of circular or similar shape, the cover plate thickness and reinforcement is to provide strength and stiffness equivalent to the requirements for small rectangular hatches.

4 For small hatch covers constructed of materials other than steel, the required scantlings are to provide equivalent strength.

14.7.1.3 Primary Securing Devices

The primary securing devices are to be fitted such that the hatch cover can be secured in place and be made weathertight by means of a closing mechanism employing any one of the following methods:

(a) Butterfly nuts tightening onto forks (clamps),

(b) Quick acting cleats, or

(c) A central locking device.

Dogs (twist tightening handles) with wedges are not acceptable.

14.7.1.4 Requirements for Primary Securing Devices

1 Hatch covers are to be fitted with a gasket of elastic material. This is to be designed to allow metal-to-metal contact at a designed compression and to prevent over compression of the gasket by green sea forces that may cause the securing devices to be loosened or dislodged. The metal-to-metal contacts are to be arranged close to each securing device in accordance with **Fig. 14.7.1-2**, and of sufficient capacity to withstand the bearing force.

2 The primary securing device is to be designed and manufactured such that the designed compression pressure is achieved by one person without the need of any tools.

3 For a primary securing device that uses butterfly nuts, the forks (clamps) are to be of a robust design. They are to be designed to minimize the risk of the butterfly nuts being dislodged while in use; by means of curving the forks upward, a raised surface on the free end, or a similar method. The plate thickness of unstiffened steel forks is not to be less than 16 *mm*. An example arrangement is shown in **Fig. 14.7.1-1**.

4 For small hatch covers located on an exposed deck forward of the foremost cargo hatch, the hinges are to be fitted such that the predominant direction of green sea force will cause the cover to close, which means that the hinges are normally to be located on the fore edge.

5 On small hatchways located between the main hatchways, for example between Nos. 1 and 2, the hinges are to be placed on the fore edge or outboard edge, whichever is practicable for protection from green sea force in beam seas and bow quartering conditions.

14.7.1.5 Secondary Securing Device

Small hatchways on the fore deck are to be fitted with an independent secondary securing device (e.g. by means of a sliding bolt, a hasp or a backing bar of slack fit) which is capable of keeping the hatch cover in place, even in the event that the primary securing device becomes loosened or dislodged. It is to be fitted on the side opposite to the hatch cover hinges.

Fig. 14.7.1-1 Example of a Primary Securing Method

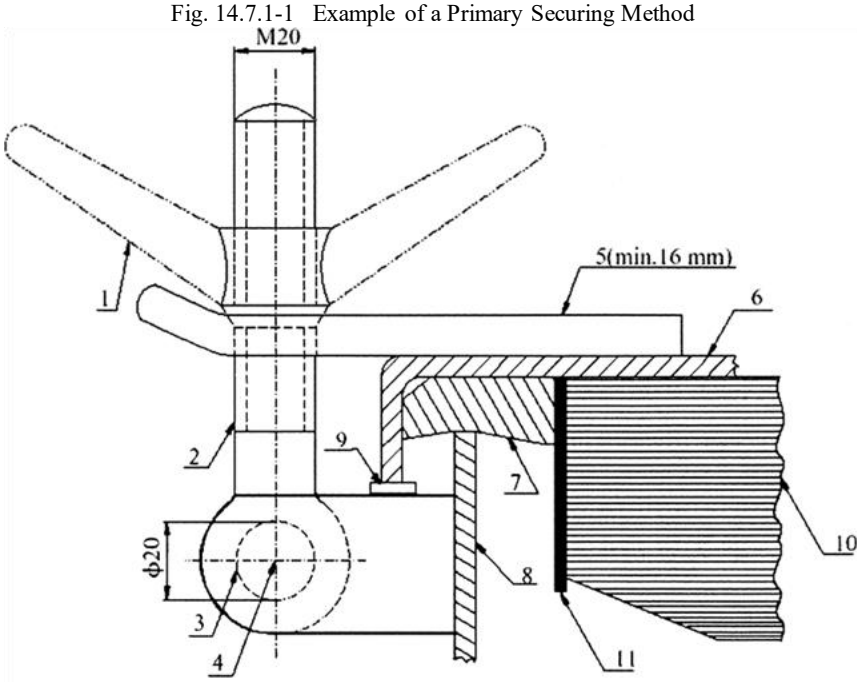

(Note : Dimensions in millimeters)

1. Butterfly nut
2. Toggle Bolt
3. Toggle bolt pin
4. Center of toggle bolt pin
5. Fork(clamp) plate
6. Hatch cover
7. Gasket
8. Hatch coaming
9. Bearing pad welded on the bracket of a toggle bolt for metal to metal contact
10. Stiffener
11. Inner edge stiffener

Fig. 14.7.1-2 Arrangement of Stiffeners

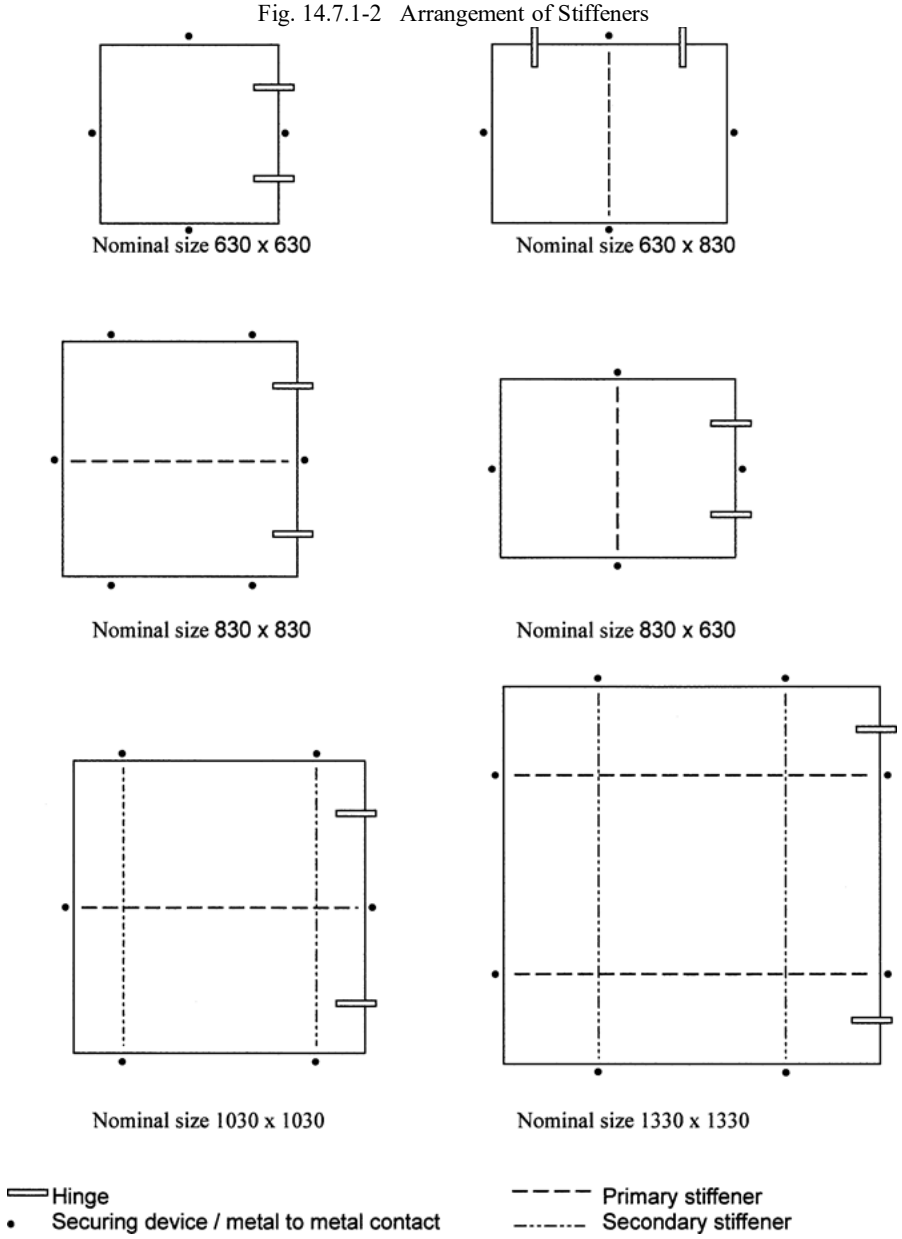

14.7.2 Machinery Space Openings

14.7.2.1 Protection of Machinery Space Openings

Machinery space openings are to be enclosed by steel casings.

14.7.2.2 Exposed Machinery Space Casings

1 Exposed machinery space casings are to have scantlings not less than that those required in **4.9.2.2**, taking the *c*-value as 1.0.

2 The thickness (gross scantlings) of the top plating of exposed machinery space casings is not to be less than that obtained from the following formulae:

Position I: $6.3S + 2.5 \ (mm)$

Position II: $6.0S + 2.5 \ (mm)$

Where:

S : Spacing of stiffeners (m)

14.7.2.3 Machinery Space Casings below Freeboard Deck or within Enclosed Spaces

The scantlings of machinery space casings below the freeboard deck or within enclosed superstructures or deckhouses are to comply with the following **(1)** and **(2)**:

(1) The thickness (gross scantlings) of the plating is to be at least 6.5 *mm*; where the spacing of stiffeners is greater than 760 *mm*, the thickness is to be increased at the rate of 0.5 *mm* per 100 *mm* excess in spacing. In accommodation spaces, the thickness of

the plating may be reduced by 2 *mm*.

(2) The section modulus of stiffeners (gross scantlings) is not to be less than that obtained from the following formula:

$1.2S\ell^3$ (cm^3)

Where:

ℓ : Tween deck height (m)

S : Spacing of stiffeners (m)

14.7.2.4 Access Openings to Machinery Spaces

1 All access openings to machinery spaces are to be located in protected positions as far as possible and provided with steel doors capable of being closed and secured from both sides. Such doors in exposed machinery casings on the freeboard deck are to comply with the requirements in **11.3.2.6-1**.

2 The sills of doorways in machinery casings are not to be less than 600 *mm* in height above the upper surface of the deck in Position I and 380 *mm* in Position II.

3 In ships having a reduced freeboard, doorways in the exposed machinery casings on the freeboard or raised quarter deck are to lead to a space or passageway which is of a strength equivalent to that of the casing and is separated from the stairway to the machinery spaces by a second steel weathertight door of which the doorway sill is to be at least 230 *mm* in height.

14.7.2.5 Miscellaneous Openings in Machinery Casings

1 Coamings of any fiddley, funnel and machinery space ventilator in an exposed position on the freeboard or superstructure deck are to be as high above the deck as reasonable and practicable.

2 In exposed positions on the freeboard and superstructure decks, fiddley openings and all other openings in the machinery casings are to be provided with strong steel weathertight covers permanently fitted in their proper positions.

3 Annular spaces around funnels and all other openings in the machinery casings are to be provided with a means of closing capable of being operated from outside the machinery space in case of fire.

4 The ventilator coamings above the upper surface of the deck specified in **-1** are to extend more than 4.5 *m* above the surface of the deck in Position I, and more than 2.3 *m* above the surface of the deck in Position II except for closing means specified in **-3**. Ventilator openings are not to be fitted with weathertight closing appliances.

14.7.2.6 Machinery Casings within Unenclosed Superstructures or Deckhouses

Machinery casings within unenclosed superstructures or deckhouses and doors provided thereon are to be constructed to the satisfaction of the Society, having regard to the degree of protection afforded by the superstructure or deckhouse.

14.7.3 Companionways and Other Deck Openings

14.7.3.1 Manholes and Flush Deck Openings

Manholes and flush deck openings in exposed positions on the freeboard and superstructure decks or within superstructures other than enclosed superstructures are to be closed by steel covers capable of being made watertight. These covers are to be secured by closely spaced bolts or to be permanently fitted.

14.7.3.2 Companionways

1 Access openings in the freeboard deck are to be protected by enclosed superstructures, or by deckhouses or companionways of equivalent strength and weathertightness.

2 Access openings in exposed superstructure decks or in the top of deckhouses on the freeboard deck which give access to a space below the freeboard deck or a space within an enclosed superstructure are to be protected by efficient deckhouses or companionways.

3 Doorways in deckhouse or companionways such as specified in **-1** and **-2** are to be provided with doors complying with the requirements in **11.3.2.6-1**.

4 The sills of doorways in companionways specified in **-1** to **-3** are not to be less than 600 *mm* in height above the upper surface of the deck in Position I and 380 *mm* in Position II.

5 For deckhouses or superstructures which protect access openings to spaces below the freeboard deck, the height of sills of doorways on the freeboard deck are not to be less than 600 *mm*. However, where access is provided from the deck above as an alternative to access from the freeboard deck, the height of sills into a bridge or poop or deckhouse may be reduced to 380 *mm*.

6 Where the access openings in superstructures and deckhouses which protect access openings to spaces below the freeboard deck do not have closing appliances in accordance with the requirements of **11.3.2.6-1**, the openings to spaces below the freeboard deck are to be considered exposed.

7 Grouping into deckhouse and companion specified in **14.7.3.2** is to be as follows:

(1) A structure is regarded as a deckhouse where its inside is always accessible through access openings provided on the top of the structure or through under-deck passageways, even when all access openings in the boundary walls are closed.

(2) A structure is regarded as a companion where its inside is not accessible through any other way, when all access openings in the boundary walls are closed.

14.7.3.3 Openings to Cargo Spaces

Access and other openings to cargo spaces are to be provided with a means of closing capable of being operated from outside the spaces in case of fire. Such closing means for any opening leading to any other space inboard the ship is to be of steel.

14.8 Bulwarks and Guardrails

14.8.1 General

14.8.1.1

1 Efficient guardrails or bulwarks are to be provided around all exposed decks.

2 Guardrails specified in **-1** above are to comply with the following:

(1) Fixed, removable or hinged stanchions are to be fitted about 1.5 *m* apart. Removable or hinged stanchions are to be capable of being locked in the upright position.

(2) At least every third stanchion is to be supported by a bracket or stay. Alternatively, stanchions are to be of increased breadth as in **(a)** to **(c)** below, depending on their arrangement. The figure of these stanchions is given in **Fig. 14.8.1-1**.

(a) At least every third stanchion is to be of increased breadth : $kb_s \geq 2.9b_s$

(b) At least every second stanchion is to be of increased breadth : $kb_s \geq 2.4b_s$

(c) Every stanchion is to be of increased breadth: : $kb_s \geq 1.9b_s$

kb_s : increased breadth of stanchion (mm)

b_s : breadth (mm) of stanchion according to standards approved by the Society

Stanchions of increased breadth are to be welded to the deck with double continuous fillet welds and a minimum leg size of 7 mm or as specified by standards approved by the Society.

(3) Stanchions with increased breadth, as described in **(2)** above, are to be aligned with the members below the deck as shown in **Fig. 14.8.1-1**. These members are to be a minimum of 100×12 (mm) flat bar welded to the deck by double continuous fillet welds. The stanchions with increased breadth need not be aligned with under deck structures for deck plating exceeding 20 mm.

(4) Where necessary for the normal operation of the ship, steel wire ropes may be accepted in lieu of guardrails. The wires are to be made taut by means of turnbuckles.

(5) Where necessary for the normal operation of the ship, chains fitted between two fixed stanchions and/or bulwarks are acceptable in lieu of guardrails.

3 For Ships having unusually large freeboards, "freeboard deck" may read as "assumed freeboard deck" in the application of **14.8**.

14.8.2 Dimensions

14.8.2.1

1 The height of bulwarks or guardrails specified in **14.8.1** is to be at least 1 *m* from the upper surface of the deck, however, where this height would interfere with the normal operation of the ship and suitable alternative protection devices such as portable guardrails are provided; a lesser height may be permitted.

2 The clearance below the lowest course of guardrails on superstructure and freeboard decks is not to exceed 230 mm, and those for the other courses are not to be more than 380 mm.

3 Guardrails fitted on superstructures and freeboard decks are to have at least three courses. In other locations, guardrails are to have at least two courses.

4 For ships with rounded gunwales, the guardrail supports are to be placed on the flat part of the deck.

14.8.3 Construction

14.8.3.1

1 Bulwarks are to be strongly constructed and effectively stiffened on their upper edges. The thickness of bulwarks on the freeboard deck is generally to be at least 6 mm.

2 Bulwarks are to be supported by stiffened stays connected to the deck in way of beams or at effectively stiffened positions. The spacing of these stays on the freeboard deck is not to be more than 1.8 *m*.

3 Bulwarks on the decks which are designed to carry timber deck cargoes are to be supported by especially strong stays spaced not more than 1.5 *m* apart.

4 A bracket type is recommended for the lower connections of bulwark stays (*See* **Fig. 14.8.1-2**). In cases where a gusset type is applied for the lower connections of bulwark stays (*See* **Fig. 14.8.1-3**), recommended as following **(1)** to **(3)**:

(1) The gusset plate is to be made of steel with the same yield stress as the steel of the upper deck to which the gusset plate is attached.

(2) The toes of gusset plates are to have a soft nose design.

(3) Pad plates are to be provided beneath the gusset plates. In addition, the breadth of such pad plates is to be as narrow as practicable. The pad plates are to be made of steel with the same yield stress as the steel of the upper deck to which the pad plate is attached.

5 In cases where a bracket type is applied for the lower connections of bulwark stays, the bulwark stays are to be properly stiffened for the prevention of local buckling.

6 Expansion joints are to be provided at appropriate intervals in bulwarks.

Fig. 14.8.1-1 Guardrail Stanchion (Example)

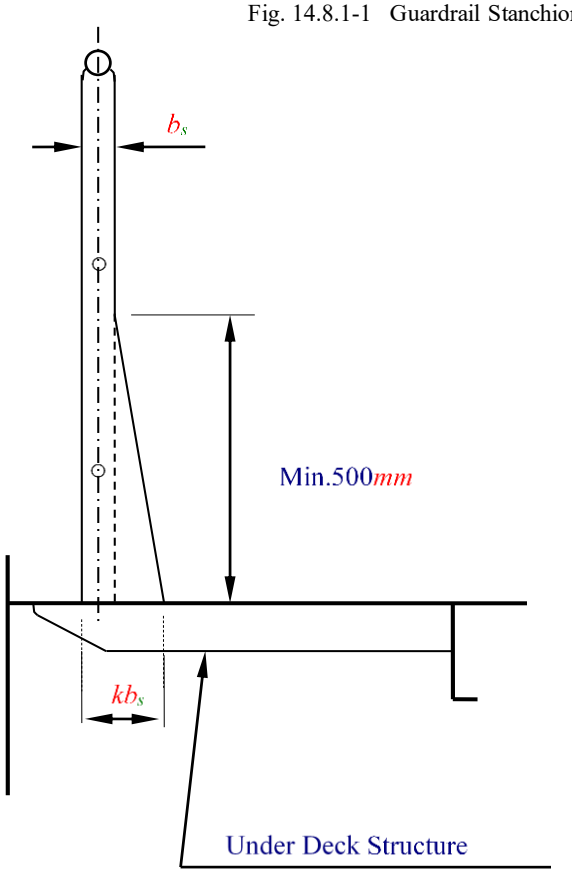

Fig. 14.8.1-2 Example of Bracket Type

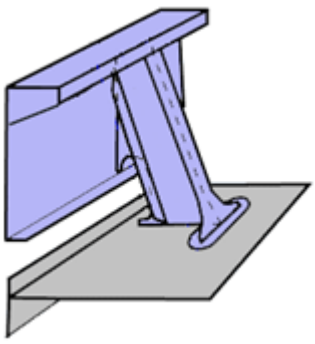

Fig. 14.8.1-3 Example of Gusset Type

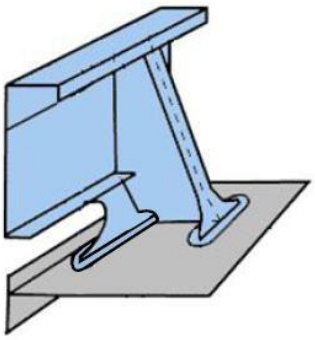

14.8.4 Miscellaneous

14.8.4.1

1 Gangways and other openings in bulwarks are to be well clear of the breaks of superstructures.

2 Where bulwarks are cut to form gangways or other openings, stays of increased strength are to be provided at the ends of the openings.

3 The plating of bulwarks in way of mooring pipes is to be doubled or increased in thickness.

4 At ends of superstructures, the bulwark rails are to be bracketed either to the superstructure end bulkheads or to the stringer plates of the superstructure decks; or other equivalent arrangements are to be made so that an abrupt change of strength may be avoided.

14.9 Freeing Arrangements

14.9.1 General

14.9.1.1

1 Where bulwarks on the weather parts of freeboard or superstructure deck form wells, ample provision is to be made for rapidly freeing and draining the decks of water.

2 Ample freeing ports are to be provided for clearing any space other than wells, where water is liable to be shipped and to remain.

3 In ships having superstructures which are open at either or both ends, adequate provisions for freeing the space within superstructures is to be provided and the all freeing port area is to be in accordance with the following **(1)** to **(3)**.

(1) The minimum freeing port area on each side of the ship for the open superstructure (A_s) is not to be less than that obtained from the following formula.

$$A_s = \frac{A_1 b_0 h_s}{2\ell_t h_w}\left[1-\left(\frac{\ell_w}{\ell_t}\right)^2\right] \ (m^2)$$

A_1 : As given by the following formulae

Where ℓ_t is not more than 20 m: $0.7 + 0.035\ell_t$ (m^2)

Where ℓ_t is more than 20 m : $0.07\ell_t$ (m^2)

ℓ_t : As given by the following formulae

$\ell_w + \ell_s$ (m)

ℓ_w : Length (m) of the open deck enclosed by bulwarks

ℓ_s : Length (m) of the common space within the open superstructure

b_0 : Breadth (m) of the openings in the end bulkhead of the enclosed superstructure

h_s : One standard superstructure height (m) according to the requirement in **1.4.3.3**

h_w : The distance (m) of the well deck above the freeboard deck

(2) The minimum freeing port area on each side of the ship for the open well (A_w) is not to be less than that obtained from the following formula.

$$A_w = \frac{A_2 h_s}{2h_w} \ (m^2)$$

A_2 : As given by the following formulae

Where ℓ_w is not more than 20 m : $0.7 + 0.035\ell_w + a$ (m^2)

Where ℓ_w is more than 20 m : $0.07\ell_w + a$ (m^2)

a : As obtained from the following formulae

Where h is more than 1.2 m : $0.04\ell_w(h - 1.2)$ (m^2)

Where h is not more than 1.2 m, but not less than 0.9 m : 0 (m^2)

Where h is less than 0.9 m : $-0.04\ell_w(0.9 - h)$ (m^2)

h : Average height (m) of bulwarks above the deck

ℓ_w, h_s *and* h_w : As specified in **(1)**

(3) In ships either without sheer or with less sheer than the standard, the minimum freeing port area obtained from **(1)** and **(2)** above is to be multiplied by the factor obtained from the following formula.

$$1.5 - \frac{S}{2S_0}$$

S : Average of actual sheer (mm)

S_0 : Average of the standard sheer (mm) according to the requirements in **Part V**

4 For type "*A*" or "*B*-100" ships with especially reduced freeboard, guardrails are to be provided for at least a half of the length of the exposed parts of the weather deck or other effective freeing arrangements are to be considered, as required by the Society.

5 For Ships having unusually large freeboards, "freeboard deck" may read as "assumed freeboard deck" in the application of **14.9**.

14.9.2 Freeing Port Area

14.9.2.1

1 The freeing port area on each side of the ship for each well on the freeboard and raised quarter decks in **14.9.1-1** is not to be less than that obtained from the following formulae. The area for each well on superstructure decks other than the raised quarter deck is not to be less than one-half of that obtained from the formulae.

Where ℓ is not more than 20 m : $0.7 + 0.035\ell + a$ (m^2)

Where ℓ is more than 20 m : $0.07\ell + a$ (m^2)

ℓ : Length of bulwark (m). but need not be taken as greater than 0.7 L_f.

a : As obtained from the following formulae.

Where h is more than 1.2 m: : $0.04\ell(h - 1.2)$ (m^2)

Where h is not more than 1.2 m, but not less than 0.9 m : 0 (m^2)

Where h is less than 0.9 m : $-0.04\ell(0.9 - h)$ (m^2)

h : Average height (m) of bulwarks above the deck

2 In ships either without sheer or with less sheer than the standard, the minimum freeing port area obtained from the formulae in **-1** is to be increased by multiplying with the factor obtained from the following formula:

$$1.5 - \frac{S}{2S_0}$$

S : Average of actual sheer (mm)

S_0 : Average of the standard sheer (mm) according to the requirements in **Part V**

3 Where a ship is provided with a trunk or a hatch side coaming which is continuous or substantially continuous between detached superstructures, the area of the freeing port opening is not to be less than that given by **Table 14.9.1-1**. "Where a ship is provided with a trunk or a hatch side coaming which is continuous or substantially continuous between detached superstructures" refers to the case where F_0 is not greater than F_1, and F_0 and F_1 are shown below.

F_0 : Free flow area (m^2) through which water runs across the deck given by the following formula

$\sum(\ell_i \cdot h_i - a_i)$

ℓ_i : Distance (m) between hatchways, and between hatchways and superstructures and deckhouse (m)

h_i : Height (m) of bulwarks

a_i : Projected area (m^2) of structures which prevent free flow in $\ell_i \cdot h_i$ (m^2)

F_1 : As specified in **14.9.2-1** and **-2** (m^2)

4 Where F_0 is greater than F_1, but not greater than F_2, the freeing port area (F) is to be increased by the following formula. F_0 and F_1 are shown in **(1)** above, and F_2 is shown below.

$F = F_1 + F_2 - F_0$ (m^2)

F_2 : As specified in **14.9.2-3** (m^2)

5 A flush-decker having an effective deckhouse is to be considered to have two wells afore and abaft the deckhouse, and each of these wells is required to have a freeing port area specified in **-1** and **-2** above. The term "effective deckhouse" means a structure having a breadth not less than 80% of the breadth of ship and the width of passageways at its sides does not exceed 1.5m.

6 Where a divisional bulkhead extending from side to side is provided at the forward end of deckhouse, the ship is to be considered to have two wells afore and abaft the bulkhead, irrespective of the breadth of deckhouse, and each of these wells is required to have the freeing port area specified in **-1** and **-2** above.

7 Notwithstanding the requirements in **-1** to **-3**, where deemed necessary by the Society in type "*A*" or "*B*-100" ships having trunks on the freeboard deck, guardrails are to be provided instead of bulwarks on the freeboard deck in way of trunks for more than half of the length of the trunk.

8 In ships complying with the requirements of **14.9.1-4**, the guardrails installed on more than half the length of the exposed parts of the freeboard deck may be replaced by freeing ports in the lower parts of the bulwarks, for at least 33% of the total area of bulwarks. In ships complying with the requirements of **-6** above, the guardrails installed on half the length of trunks may be replaced by freeing ports in the lower parts of the bulwarks, for at least 33% of the total area of bulwarks.

9 In type "*B* -60" ships, freeing ports in the lower parts of bulwarks are to have an area not less than 25% of the total area of bulwarks.

10 Where freeing ports have rails or other fixtures that reduce the area of the opening, the projected area caused by these fixtures is to be deducted from the actual freeing port area during calculations.

11 Where a recess in the side shell or superstructure of a pure car carrier or similar ship forms a well, adequate freeing ports are to be provided in accordance with the requirements of **14.9.2-3**.

Table 14.9.1-1 Area of Freeing Ports

Breadth of hatchway or trunk	Area of freeing ports in relation to the total area of bulwark
$0.4B_f$ or less	0.2
$0.75B_f$ or more	0.1
Note: The area of freeing ports at intermediate breadth is to be obtained by linear interpolation.	

14.9.3 Arrangement of Freeing Ports

14.9.3.1

1 Two-thirds of the freeing port area required by **14.9.2** is to be provided in the half of the well near the lowest point of the sheer curve, and the remaining one-third is to be evenly spread along the remaining length of the well.

2 The freeing ports are to have well rounded corners and their lower edges are to be as near the deck as practicable.

3 In ships without sheer or having very small sheer, the area of freeing ports is to be distributed throughout the whole length of the well.

14.9.4 Construction of Freeing Ports

14.9.4.1

1 Where both the length and the height of freeing ports exceed 230 *mm* respectively, freeing ports are to be protected by rails spaced approximately 230 *mm* apart.

2 Where shutters are provided on freeing ports, ample clearance is to be provided to prevent jamming. Hinge pins or bearings of the shutters are to be of non-corrodible materials.

3 The shutters referred to in **-2** are not to be provided with securing appliances.

14.10 Doors

14.10.1 Bow Doors and Inner Doors

14.10.1.1 Application

1 14.10.1 give the requirements for the arrangement, strength and securing of bow doors leading to a complete or long forward enclosed superstructure.

2 In 14.10.1, two types of visor and side opening doors (hereinafter collectively referred to as "door(s)") are provided for.

3 Other types of doors in **-2** are to be specially considered in association with applicable requirements of these Rules.

4 The "securing device", "supporting device" and "locking device" referred to in 14.10.1.3 mean the following devices.

(1) Securing device : a device used to keep the door closed by preventing it from rotating about its hinges.

(2) Supporting device : a device used to transmit external or internal loads from the door to a securing device and from the securing device to the ship's structure, or a device other than a securing device, such as a hinge, stopper or other fixed device that transmits loads from the door to the ship's structure.

(3) Locking device : a device that locks the securing device in the closed position.

14.10.1.2 Arrangement of Doors and Inner Doors

1 Doors are to be situated above the freeboard deck. A watertight recess in the collision bulkhead and above the deepest waterline fitted for arrangement of ramps or other related mechanical devices may be regarded as a part of the freeboard deck for the purpose of this requirement.

2 An inner door is to be fitted. The inner door is to be part of the collision bulkhead. The inner door does not need to be fitted directly above the bulkhead below, provided it is located within the limits specified for the position of the collision bulkhead. Refer to the regulations of 2.2.1.1.

3 A vehicle ramp may be arranged as the inner door specified in **-2**, provided that it forms a part of the collision bulkhead and satisfies the requirements for position of the collision bulkhead as stipulated in 2.2.1.1. If this is not possible a separate inner weathertight door is to be installed, as far as is practicable within the limits specified for the position of the collision bulkhead.

4 Doors are to be generally weathertight and give effective protection to inner doors.

5 Inner doors forming part of the collision bulkhead are to be weathertight over the full height of the cargo space and arranged with sealing supports on the aft side of the doors.

6 Doors, inner doors and ramps are to be arranged so as to preclude the possibility of the door or ramp causing structural damage to the inner door or to the bulkhead when damage to or detachment of the door or ramp occurs. If this is not possible, a separate inner weathertight door is to be installed, as indicated in 2.2.1.1.

7 The requirements for inner doors in 14.10.1 are based on the assumption that vehicles are effectively lashed and secured against movement in the stowed position.

14.10.1.3 Strength Criteria

1 Scantling of primary members and securing and supporting devices of doors and inner doors are to be determined to withstand each design load using the permissible stresses specified in 14.10.1.4.

Shearing stress : $\tau = \dfrac{80}{K}$ (N/mm^2)

Bending stress : $\sigma = \dfrac{120}{K}$ (N/mm^2)

Equivalent stress : $\sigma_e = \sqrt{\sigma^2 + 3\tau^2} = \dfrac{150}{K}$ (N/mm^2)

K : Material factor corresponding to the kind of steel, as specified in 3.2.

2 The buckling strength of primary members is to be verified as being adequate.

3 For steel to steel bearings in securing and supporting devices, the bearing pressure calculated by dividing the design force by the projected bearing area is not to exceed $0.8\sigma_y$, where σ_Y is the yield stress of the bearing material. For other bearing materials, the permissible bearing pressure is to be deemed at the discretion of the Society.

4 The arrangement of securing and supporting devices is to be such that threaded bolts do not carry support forces. The maximum tension in way of bolts not carrying support forces is not to exceed:

$\dfrac{125}{K}$ (N/mm^2)

K : Material factor corresponding to the material, as specified in **-1**

14.10.1.4 Design Loads

1 The design load of the door are to be as follows:

(1) The design external pressure P_e, to be considered for the scantling of primary members and securing and supporting devices of doors is not to be less than the pressure below:

$$P_e = 2.75(0.22 + 0.15 tan\,\alpha)\,(0.4V sin\,\beta + 0.6\sqrt{L_{C200}})^2 \quad (kN/m^2)$$

V : Speed of ship, in knots, as specified in **2.1.8, Part A** (*kt*)

α : Flare angle at the point to be considered

β : Entry angle at the point to be considered

The "flare angle" and "entry angle" mean the following angles.

(a) Flare angle : The angle between the vertical line and the tangent line of the side shell plating, measured in a plane perpendicular to the horizontal tangent line of the shell plating. (*See* **Fig.14.10.1-1**)

(b) Entry angle : The angle between a longitudinal line parallel to the centreline and the tangent to the shell plating in a horizontal plane.(*See* **Fig. 14.10.1-1**)

(2) The design external forces F_x, F_y and F_z(*kN*), considered for the scantlings of securing and supporting devices of doors are not to be less than:

$$F_x = P_e A_x$$

$$F_y = P_e A_y$$

$$F_z = P_e A_z$$

A_x : Area, in m^2, of the transverse vertical projection of the door between the levels of the bottom of the door and the top of the upper deck bulwark, or between the bottom of the door and the top of the door, including the bulwark, where it is part of the door, whichever is lesser Where the flare angle of the bulwark is at least 15 degrees less than the flare angle of the adjacent shell plating, the height from the bottom of the door may be measured to the upper deck or to the top of the door, whichever is lesser. In determining the height (h_1)from the bottom of the door to the upper deck or to the top of the door, the bulwark is to be excluded.

A_y : Area, in m^2, of the longitudinal vertical projection of the door between the levels of the bottom of the door and the top of the upper deck bulwark, or between the bottom of the door and the top of the door, including the bulwark, where it is part of the door, whichever is the lesser Where the flare angle of the bulwark is at least 15 degrees less than the flare angle of the adjacent shell plating, the height from the bottom of the door may be measured to the upper deck or to the top of the door, whichever is lesser. In determining the height (h_1)from the bottom of the door to the upper deck or to the top of the door, the bulwark is to be excluded.

A_z : Area, in m^2, of the horizontal projection of the door between the bottom of the door and the top of the upper deck bulwark, or between the bottom of the door and the top of the door, including the bulwark, where it is part of the door, whichever is lesser Where the flare angle of the bulwark is at least 15 degrees less than the flare angle of the adjacent shell plating, the height from the bottom of the door may be measured to the upper deck or to the top of the door, whichever is lesser. In determining the height from the bottom of the door to the upper deck or to the top of the door (h_1), the bulwark is to be excluded.

P_e : External pressure, as given in **(1)** with angles α and β defined as follows:

α : Flare angle measured at a location on the shell $h_1/2$ above the bottom of the door and $\ell/2$ aft of the intersection of the door with the stem

β : Entry angle measured at a location on the shell $h_1/2$ above the bottom of the door and $\ell/2$ aft of the intersection of the door with the stem

ℓ : Length, in *m*, of the door at a height $h_1/2$ above the bottom of the door

w : Breadth, in *m*, of the door at a height $h_1/2$ above the bottom of the door

h_1 : Height, in *m*, of the door between the levels of the door and the upper deck or between the bottom of the door and the top of the door, whichever is the lesser (*m*)

For doors, including bulwark, of unusual form or proportions, e.g. ships with a rounded nose and large stem angles, the area

and angles used for determination of the design values of external forces may require special consideration.

(3) For visor doors the closing moment M_y under external loads is to be taken as:

$M_y = F_x a + 10Wc - F_z b$ (*kN/m*)

W : Mass (*ton*) of the visor door

a : Vertical distance, in *m*, from the visor pivot to the centroid of the transverse vertical projected area of the visor door.(*See* **Fig. 14.10.1-2**)

b : Horizontal distance, in *m*, from the visor pivot to the centroid of the projected area of the visor door.(*See* **Fig. 14.10.1-2**)

c : Horizontal distance, in *m*, from the visor pivot to the centre of gravity of visor mass. (*See* **Fig. 14.10.1-2**)

(3) The lifting arms of a visor door and its supports are to be dimensioned for the static and dynamic forces applied during lifting and lowering operations, and a minimum wind pressure of 1.5 kN/m^2 is to be taken into account.

2 The design load of the inner door is to be as follows:

(1) The design external pressure P_e and P_h considered for the scantlings of primary members, securing and supporting devices and surrounding structure of inner doors is to be taken as the greater of the following:

$P_e = 0.45L_{C200}$ (kN/m^2)

hydrostatic pressure$P_h = 10h_2$ (kN/m^2)

h_2 : Distance, in *m*, from the load point to the top of the cargo space

(2) The design internal pressure P_b considered for the scantling devices of inner doors is not to be less than 25 kN/m^2.

Fig. 14.10.1-1 Flare Angle and Entry Angle

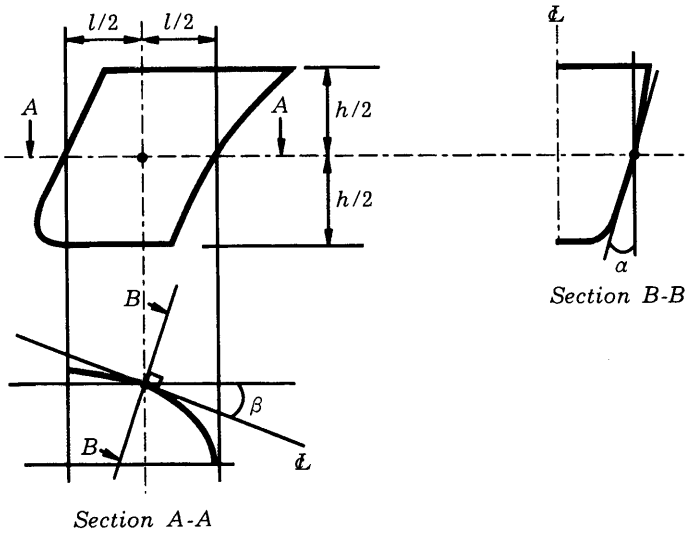

Fig. 14.10.1-2 Visor type (Upper Hinged Type) Door

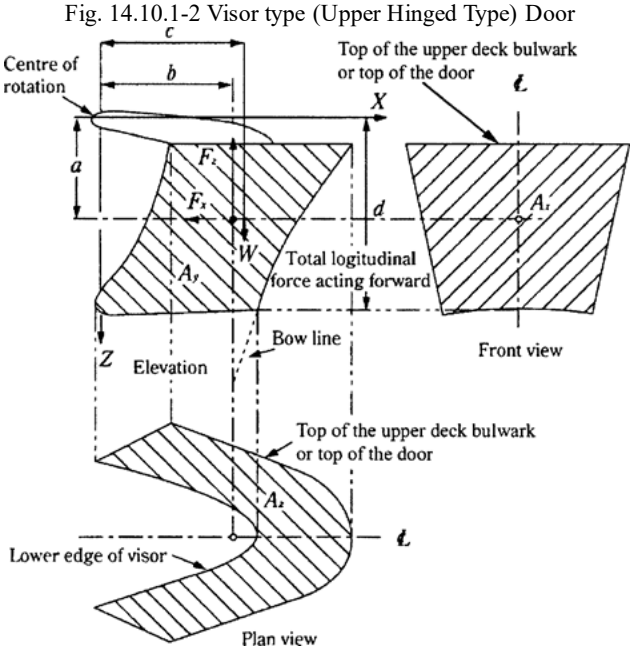

14.10.1.5 Scantlings of Doors

1 The strength of the door is to be adequately equivalent to that of the surrounding hull structure.

2 Adequate strength for opening and closing operations is to be provided in the connections of the lifting arms to the door structure and to the ship structure.

3 The thickness of door plating is not to be less than that required for the side shell plating or the superstructure side shell plating at the position calculated with the stiffener spacing taken as the frame spacing and it is not to be less than the minimum thickness of the shell plating.

4 The Secondary stiffeners are to be as follows:

(1) Secondary door stiffeners are to be supported by primary members constituting the main stiffening members of the door.

(2) The section modulus of stiffeners of the door is not to be less than that required for frames at the position calculated with the stiffener spacing taken as the frame spacing. Consideration is to be given to differences in fixity between frames and stiffeners.

(3) Stiffener webs are to have a net sectional area, in cm2, not less than:

$$A = \frac{QK}{10} \quad (cm^2)$$

Q : Shearing force, in kN, in the stiffeners calculated by using uniformly distributed external pressure P_e as given in **14.10.1.4-1(1)**

K : Material factor corresponding to the materials as given in **3.2**

5 The primary members of the door and the hull structure are to be as follows:

(1) The primary members of the door and the hull structure in way are to have sufficient stiffness to ensure integrity of the boundary support of the door.

(2) Scantlings of primary members are generally to be determined by direct strength calculations in association with the external pressure given in **14.10.1.4-1(1)** and permissible stresses given in **14.10.1.3-1**. Normally, formulae for simple beam theory may be applied to determine the bending stress. Members are to be considered to have simply supported end connections.

14.10.1.6 Scantlings of Inner Doors

The scantlings of Inner doors are to be as follows:

(1) The strength of the inner door is to be equivalent to that of the surrounding hull structure.

(2) The thickness of the inner door is not to be less than that required for plating of the collision bulkhead.

(3) Section modulus of stiffeners of the inner door is not to be less than that required for stiffeners of the collision bulkhead.

(4) Scantlings of primary members are generally to be determined by direct calculations in association with the external pressure given in **14.10.1.4-2(1)** and permissible stresses in **14.10.1.3-1**. Normally, formulae for the simple beam theory may be applied.

(5) Stiffeners of the inner door are to be supported by girders.

(6) Where inner doors also serve as vehicle ramps, the scantlings are not to be less than those required for vehicle decks.

14.10.1.7 Securing and Supporting of Doors

1 The securing and supporting of doors are to be as follows

(1) Doors are to be fitting with adequate means of securing and supporting so as to be commensurate with the strength and stiffness of the surrounding structure.

(2) The supporting hull structure in way of the doors is to be suitable for the same design loads and design stresses as the securing and supporting devices.

(3) Where packing is required, the packing material is to be of a comparatively soft type, and the supporting forces are to be carried by the steel structure only. Other types of packing may be considered.

(4) Maximum design clearance between securing and supporting devices is generally not to exceed 3 mm.

(5) A means is to be provided for mechanically fastening the door and inner door in the open position.

(6) Only active supporting and securing devices having an effective stiffness in the relevant direction are to be included and considered to calculate the reaction forces acting on these devices. Small and/or flexible devices such as cleats intended to provide local compression of packing material are generally not to be included in the calculations called for in **-2(5)**.

(7) The number of securing and supporting devices are to be the minimum practical whilst taking into account the requirements for redundant requirements given in **-2(6)**, **-2(7)** and the available space for adequate support in the hull structure. Securing devices and supporting devices are to be provided at intervals not exceeding 2.5 m and as close to each corner of the door as is practicable.

(8) For visor doors that open outwards, the pivot arrangement is generally to be such that the visor is self closing under external loads, that is $M_y > 0$. Moreover, the closing moment M_y as given in **14.10.1.4-1(3)** is to be not less than M_{y0}:

$$M_{y0} = 10Wc + 0.1\sqrt{a^2 + b^2}\sqrt{{F_x}^2 + {F_z}^2} \quad (kN/m)$$

W, a, b, c, F_x and F_z : As specified in **14.10.1.4-1**

2 The scantlings of the securing and supporting devices for doors and inner doors are to be as follows:

(1) Securing and supporting devices are to be adequately designed so that they can withstand the reaction forces within the permissible stresses given in **14.10.1.3-1**.

(2) For visor doors, the reaction forces applied on the effective securing and supporting devices, assuming the door as a rigid body, are determined for the following combination of external loads acting simultaneously with the self weight of the door:

a) Case1 : F_x and F_z

b) Case2 : $0.7F_y$ acting on each side separately together with $0.7F_x$ and $0.7F_z$

Where F_x, F_y and F_z are determined as indicated in **14.10.1.4-1(2)** and applied at the centroid of projected areas.

(3) For side-opening doors, the reaction forces applied on the effective securing and supporting devices assuming the door as a rigid body are determined for the following combination of external loads acting simultaneously with the self weight of the door:

a) Case1 : F_x, F_y and F_z acting on both doors

b) Case2 : $0.7F_x$ and $0.7F_z$ acting on both doors and $0.7F_z$ acting on each door separately,

Where F_x, F_y and F_z are determined as indicated in **14.10.1.4-1(2)** and applied at the centroid of projected areas.

(4) The support forces as determined according to **(2)a)** and **(3)a)** are to generally give rise to a zero moment about the transverse axis through the centroid of the area Ax. For visor doors, longitudinal reaction forces of pin and/or wedge supports to the door base contributing to this moment are not to be of the forward direction.

(5) The distribution of the reaction forces acting on the securing and supporting devices may require to be determined by direct calculations taking into account the flexibility of the hull structure and the actual position and stiffness of the supports.

(6) The arrangement of securing and supporting devices is to be designed with redundancy so that in the event of failure of any single securing or supporting device the remaining devices are capable of withstanding the reaction forces without exceeding by more than 20% of the permissible stresses given in **14.10.1.3-1**.

(7) For visor doors, two securing devices are to be provided at the lower part of the door, each capable of providing the full reaction force required to prevent opening of the door within the permissible stresses given in **14.10.1.3-1**. The opening moment M_0 to be balanced by this reaction force is not to be taken as less than:

$$M_0 = 10Wd + 5A_x a \quad (kN/m)$$

d : Vertical distance, in m, from the hinge axis to the centre of the door

W, A_x and a : As defined in **14.10.1.4-1**

(8) For visor doors, the securing and supporting devices excluding the hinges are to be capable of resisting the vertical design forces $(F_z - 10W)$ (kN)within the permissible stresses given in **14.10.1.3-1.**

(9) All load transmitting elements in the design load path, from door through securing and supporting devices into the ship structure, including welded connections, are to be to the same strength standard as required for the securing and supporting devices.

(10) For side-opening doors, the thrust bearing has to be provided in way of girder ends at the closing of the two leaves to prevent one leaf from shifting towards the other one under the effect of unsymmetrical pressure (*See* example of **Fig. 14.10.1-3**). Each part of the thrust bearing has to be kept secured on the other part by means of securing devices.

(11) Notwithstanding the provision in **(10)**, any other arrangement serving the same purpose may be proposed.

Fig. 14.10.1-3 Example of Thrust Bearing

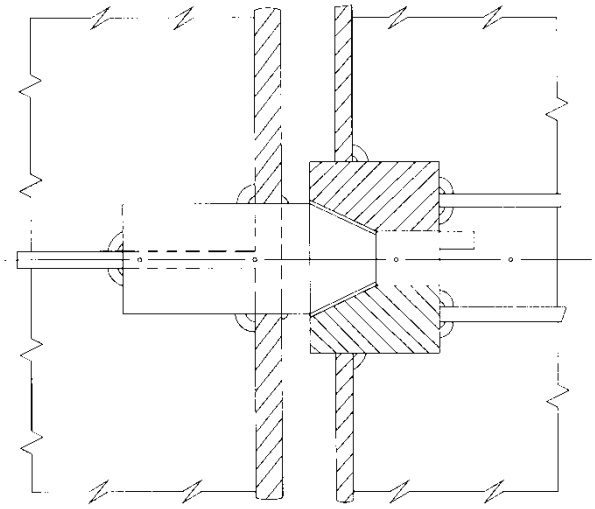

14.10.1.8 Securing and Locking Arrangement

1 The system for operation of securing devices and locking devices is to be as follows:

(1) Securing devices are to be simple to operate and easily accessible.

(2) Securing devices are to be equipped with a mechanical locking arrangement (self locking or separate arrangement), or to be of the gravity type.

(3) The opening and closing systems as well as securing and locking devices are to be interlocked in such a way that they can only operate in the proper sequence. (e.g. the doors can be closed only if securing and locking devices are released.)

(4) Doors and inner doors giving access to vehicle decks are to be provided with an arrangement for remote control of the following from a position above the freeboard deck:

(a) Closing and opening the doors

(b) Associated securing and locking of every door.

(5) Indication of the open/closed position of every door and every securing and locking device are to be provided at the remote control stations. The operating panels for operation of doors are to be inaccessible to unauthorized persons (e.g. installing a locking device on the operating panel). A notice plate giving instructions to the effect that all securing devices are to be supplemented by warning indicator lights is to be displayed.

(6) Where hydraulic securing devices are used, the system is to keep the door mechanically closed and locked even in the event of loss of hydraulic fluid. However, gravity or friction cannot maintain the door mechanically closed, securing devices such as mechanical pins are to be provided. The hydraulic system for securing and locking devices is to be isolated from other circuits, when in the closed position.

2 The indications and monitoring equipment for securing and locking devices are to be as follows

(1) The separate indicator lights and alarms mentioned in **(a)** and **(b)** below (hereinafter referred to as "indication and alarm system") are to be provided at the navigation bridge and on the local operating panel. The indication and alarm system is to be provided with a lamp test function and linked with the mode selection switch specified in **14.10.1.8-2(3)**. The indicator light at the navigation bridge is to be designed so as to not be able to be turned off and is to indicate closing and securing conditions

for each door. In addition, the required visual alarms are to indicate opening and lock-releasing conditions for each door. The audible alarms may be equipped with a silence function switch. A common indicator can be used for both the securing and locking devices.

(a) Indicator lights to show that the door and inner door are closed and that their securing and locking devices are properly positioned.

(b) In navigation mode, visual and audible alarms to show that the door and inner door are not fully closed and that their securing and locking devices are not properly positioned.

(2) The indication and alarm system specified in **(1)** above is to comply with the following requirements:

(a) The system is to be designed on the fail safe principle and is to be in accordance with the following

i) The indication panel is provided with a power failure alarm, a lamp test and a separate indication for door closed, door locked, door not closed and door not locked.

ii) Limit switches electrically close when the door is closed (when more limit switches are provided they may be connected in series)

iii) Limit switches electrically close when securing arrangements are in place (when more limit switches are provided they may be connected in series)

iv) Two electrical circuits (separate cables even if using multicore cable) with one for the indication of door closed/unclosed and the other for door locked/unlocked

v) When the limit switches malfunction, an indication to show: unclosed, unlocked and securing arrangement not in place - as appropriate.

(b) The power supply for the indication and alarm system is to be independent of the power supply for operating and closing the doors.

(c) The system is to be capable of being supplied from a backup power source regarded as a source of power (e.g. emergency generator with automatic start or electrical batteries) which is capable of supplying power within 45 *seconds* of a failure of the main source of power, or another secure supply of power (e.g. UPS) which is capable of supplying power for 18 *hours*.

(d) The sensor of the indication and alarm system is to be protected from water, ice formation, mechanical damage and is required to have at least IP55 enclosures.

(3) The indication and alarm system on the navigation bridge is to be equipped with a mode selecting function that allows selection between “harbour” and “sea voyage”, so that visual and audible alarms specified in **(1)(b)** above will be activated if the vessel leaves a harbour with a door or an inner door unclosed or with any securing device not in the correct position.

(4) A water leakage detection system with audible alarm and television surveillance is to be arranged to provide indication to the navigation bridge and to the engine control room of leakage through the inner door. The “water leakage detection system” referred to in **(2)(a)** above is to be designed on the fail safe principle.

(5) A television surveillance system based on the fail-safe principle specified in the previous **(2)(a)** is to be fitted between the door and inner door with a monitor on the navigation bridge and in the engine control room. The system must monitor the position of the doors and a sufficient number of their securing devices. Special consideration is to be given for lighting and contrasting colour of objects under surveillance.

(6) A drainage system is to be arranged in the area between the door and ramp, or where no ramp is fitted, between the door and inner door. The system is to be equipped with an audible alarm function at the navigation bridge based on the fail-safe principle specified in **(2)(a)** above, which is set off when the water level in these areas exceeds 0.5 *m* or the high water level alarm, whichever is lesser.

14.10.1.9 Reinforcement around Door Openings

1 Shell plating is to be properly rounded at the corners of door openings and is to be reinforced by thicker plate or by doubling plate around the openings.

2 Where frames are cut at the door opening, web frames are to be fitted on both sides of the opening and the structure is to be such that it properly supports the beams above the opening.

14.10.1.10 Operating and Maintenance Manual

1 An operating and maintenance manual for the door and inner door which is approved by the Society has to be provided on

board and contain information on:

(1) Main particulars and design drawings
  (a) Special safety precautions
  (b) Details of vessel
  (c) Equipment and design loading (for ramps)
  (d) Key plan of equipment (doors, inner bow doors and ramps)
  (e) Manufacturer's recommended testing for equipment
  (f) Description of equipment
    i) Doors
    ii) Inner bow doors
    iii) Bow ramp
    iv) Central power pack
    v) Bridge panel
    vi) Engine control room panel

(2) Service conditions
  (a) Limiting heel and trim of ship for loading/unloading
  (b) Limiting heel and trim for door/inner bow door operations
  (c) Doors / Inner bow doors / Ramps operating instructions
  (d) Doors / Inner bow doors / Ramps emergency operating instructions

(3) Maintenance
  (a) Schedule and extent of maintenance
  (b) Trouble shooting and acceptable clearances
  (c) Manufacturer's maintenance procedures

(4) Register of inspections, including inspection of locking, securing and supporting devices (inspections at monthly intervals and inspections following incidents that could result in damage, including heavy weather or contact in the region of doors), repairs and renewals.

2 Documented operating procedures for closing and securing the door and inner door are to be kept on board and posted at the appropriate places.

14.10.2 Side Shell Doors and Stern Doors

14.10.2.1 Application

1 14.10.2 give the requirements for the arrangement, strength and securing of side shell doors, abaft the collision bulkhead and stern doors (hereinafter collectively referred to as "door(s)") leading into enclosed spaces. "Side shell doors" and "stern doors" refer to the doors provided between the collision bulkhead and the after peak bulkhead and those provided after the after peak bulkhead.

2 The definitions of "securing device", "supporting device" and "locking device" referred to in 14.10.2 are to be as specified in 14.10.1.1-4.

14.10.2.2 Arrangement of Doors

1 Doors are to be made weathertight.

2 Where the lower edges of any openings of the doors are situated below the freeboard deck, the doors are to be so designed as to ensure the same watertightness and structural integrity as the surrounding shell plating.

3 Notwithstanding the requirements in **-2**, the lower edges of the doors are not to be below a line drawn parallel to the freeboard deck at side, which has at its lowest point at least 230 *mm* above the upper edge of the uppermost load line, unless additional measures for ensuring watertightness such as the following **(1)** to **(4)** are implemented. However, notwithstanding the additional measures in **(1)** to **(4)**, in no case are such doors to be fitted so as to have their lowest point below the deepest subdivision draught specified in 2.3.1.2(3).

(1) A second door of equivalent strength and watertightness is fitted inside the watertight door
(2) A leakage detection device is provided in the compartment between the two doors
(3) Drainage of this compartment to the bilges is controlled by a readily accessible screw-down valve
(4) The outer door opens outwards

4 The number of door openings is to be kept to the minimum compatible with design and proper operation of the ship.

5 Doors are generally to open outwards.

6 Shipside doors used for pilot transfer are to be in accordance with Regulation 23.5, Chapter V, *SOLAS* Convention.

14.10.2.3 Strength Criteria

1 Scantlings of primary members and securing and supporting devices of doors are to be determined to withstand the design loads defined in **14.10.2.4**, using the following permissible stresses:

Shearing stress : $\tau = \frac{80}{K}$ (N/mm^2)

Bending stress : $\sigma = \frac{120}{K}$ (N/mm^2)

Equivalent stress : $\sigma_e = \sqrt{\sigma^2 + 3\tau^2} = \frac{150}{K}$ (N/mm^2)

K : Material factor corresponding to the kind of steel, as specified in **3.2**.

2 The buckling strength of primary members is to be verified as being adequate.

3 For steel to steel bearings in securing and supporting devices, the bearing pressure calculated by dividing the design force by the projected bearing area is not to exceed $0.8\sigma_Y$, where σ_Y is the yield stress of the bearing material. For other bearing materials, the permissible bearing pressure is to be deemed at the discretion of the Society.

4 The arrangement of securing and supporting devices is to be such that threaded bolts do not carry support forces. The maximum tension in way of bolts not carrying support forces is not to exceed:

$\frac{125}{K}$ (N/mm^2)

K : Material factor corresponding to the material, as specified in **-1**

14.10.2.4 Design Loads

1 The design loads for primary members and securing and supporting devices are not to be less than the values given by **Table 14.10.2-1** respectively.

2 Where more than one securing and supporting devices are provided, vertical and horizontal forces may be considered as uniformly distributed between the devices.

Table 14.10.2-1 Design Loads

		F_e (kN) (External force)	F_i (kN) (Internal force)
Securing and supporting devices	Door opening inwards	$AP_e + F_p$	$F_0 + 10W$
	Door opening outwards	AP_e	$F_0 + 10W + F_p$
Primary members[1)]		AP_e	$F_0 + 10W$

Notes:

1) Design loads for primary members is F_e or F_i, whichever is greater.

A: Area (m^2) of the door that bears the actual load in the loading direction.

W: Mass of the door $(tons)$

F_p: Total packing force (kN). Packing line pressure is normally not to be taken as less than 5 N/mm.

F_0: The greater of F_c and $5A$ (kN)

F_c: Accidental force (kN) due to loose cargo etc., to be uniformly distributed over the area A and not to be taken as less than 300 kN. Where the area of doors is less than 30 m^2, the valve of F_c may be appropriately reduced to 10 A (kN). However, the valve of F_c may be taken as zero, provided an additional structure such as an inner ramp is fitted, which is capable of protecting the door from accidental forces due to loose cargoes.

P_e: External design pressure determined at the centre of gravity of the door opening and not to be taken as less than the value specified in **Table 14.10.2-2** (kN/m^2).

Table 14.10.2-2 External Design Pressure P_e

	P_e (kN/m^2)
$ZG < T$	$10(T - ZG) + 25$
$ZG \geq T$	25

Notes:

For stern doors of ships fitted with bow doors, Pe is not to be taken as less than

$$P_e = 0.6\left(0.8 + 0.6\sqrt{L_{C200}}\right)^2$$

T : Deepest subdivision draught defined in **2.3.1.2(3)**, in m.

ZG : Height of the centre of area of the door, in m, above the baseline.

14.10.2.5 Scantlings of Doors

1 Scantlings of doors are to be as follows

(1) The strength of doors is to be commensurate with that of the surrounding structure.

(2) Doors are to be adequately stiffened and means are to be provided to prevent any lateral or vertical movement of the doors when closed.

(3) Adequate strength is to be provided in the connections of the lifting/manoeuvring arms and hinges to the door structure and to the ship's structure.

(4) Where doors also serve as vehicle ramps, the design of the hinges is to take into account the ship angle of trim and heel which may result in uneven loading on the hinges.

2 The plate of the door are to be as follows

(1) The thickness of door plating is not to be less than the required thickness for the side shell plating or the superstructure side shell plating using the door stiffener spacing, but the thickness of the stern door which is not exposed to direct wave impact by a permanent ramp way provided outside the stern door may be reduced by 20% from the required thickness prescribed above.

(2) Notwithstanding the provision in **(1)** above, the thickness of the door plating is not to be less than the minimum required thickness of shell plating.

(3) Where the doors serve as vehicle ramps, the plating thickness is not to be less than that required for vehicle decks.

3 The secondary stiffeners are to be as follows

(1) The secondary stiffeners are to be supported by primary members constituting the main stiffening of the door.

(2) The section modulus of horizontal or vertical stiffeners is not to be less than that required for frames in the position calculated with the stiffener spacing taken as the frame spacing. Consideration is to be given, where necessary, to differences in fixity between the ship's frames and the door stiffeners.

(3) Where doors serve as vehicle ramps, the stiffener scantlings are not to be less than that required for vehicle decks.

4 The primary members and the hull structure are to be as follows

(1) Scantlings of primary members are generally to be determined by direct strength calculations in association with the design loads given in **14.10.2.4** and permissible stresses given in **14.10.2.3-1**. Normally, formulae for simple beam theory may be applied to determine the bending stress. Members are to be considered to have simply supported end connections.

(2) Webs of primary members are to be properly stiffened in the vertical direction to shell plating.

(3) The primary members and the hull structure in way are to have sufficient stiffness to ensure structural integrity of the boundary of the doors.

(4) Ends of stiffeners and primary members of the doors are to have sufficient rigidity against rotation and the moment of inertia is not to be less than that obtained from the following formula:

$8d^4F_P$ (cm^4)

d : Distance (m) between securing devices

F_P : *See* Notes for **Table 14.10.2-1**

(5) Moment of inertia of boundary members of the door which support primary members between securing devices is to be increased in proportion to force.

14.10.2.6 Securing and Supporting of Doors

1 The securing and supporting of doors are to be as follows

(1) Doors are to be fitted with adequate means of securing and supporting so as to be commensurate with the strength and stiffness of the surrounding structure.

(2) The supporting hull structure in way of the doors is to be suitable for the same design loads and design stresses as the securing and supporting devices.

(3) Where packing is required, the packing material is to be of a comparatively soft type, and the supporting forces are to be carried by the steel structure only. Other types of packing may be as considered appropriate by the Society.

(4) Maximum design clearance between securing and supporting devices (the permissible clearance of the local gap of the door in the secured condition) is generally not to exceed 3 *mm*. An example is shown in **Fig.14.10.2-1**.

(5) A means is to be provided for mechanically fastening the door in the open position.

(6) Only active supporting and securing devices having an effective stiffness in the relevant direction are to be included and considered to calculate the reaction forces acting on these devices. Small and/or flexible devices such as cleats intended to provide local compression of the packing material are generally not to be included in the calculations called for in **-2(2)** above.

(7) The number of securing and supporting devices are to be the minimum practical whilst taking into account the requirements for redundant requirements given in **-2(3)** and the available space for adequate support in the hull structure. Securing devices and supporting devices are to be provided at intervals not exceeding 2.5 *m* and as close to each corner of the door as is practicable.

Fig. 14.10.2-1 Maximum Design Clearance between Securing and Supporting Devices

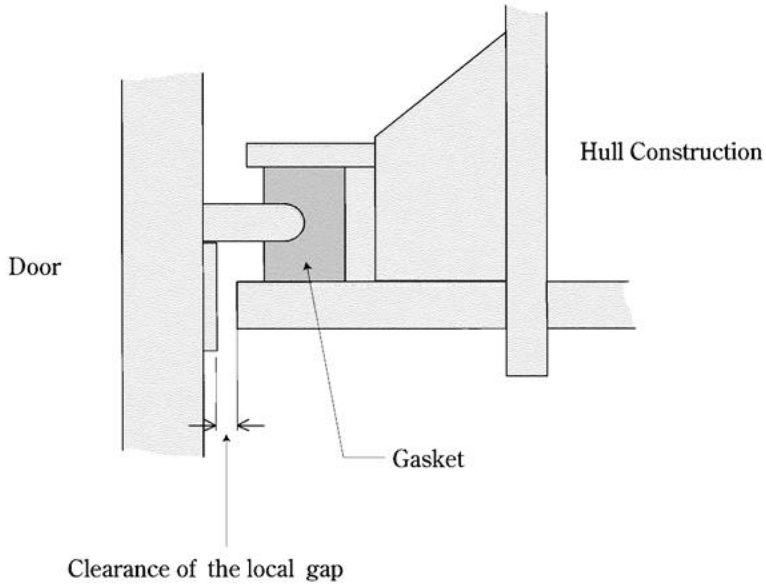

2 The scantling of the door securing device and supporting device is to be as follows

(1) Securing and supporting devices are to be adequately designed so that they can withstand the reaction forces within the permissible stresses given in **14.10.2.3-1**.

(2) The distribution of the reaction forces acting on the securing devices and supporting devices may require to be determined by direct calculations taking into account the flexibility of the hull structure and the actual position of the supports.

(3) The arrangement of securing devices and supporting devices is to be designed with redundancy so that in the event of failure of any single securing or supporting device the remaining devices are capable of withstanding the reaction forces without exceeding by more than 20% of the permissible stresses given in **14.10.2.3-1**.

(4) All load transmitting elements (supporting brackets and back-up brackets) in the design load path, from the door through securing and supporting devices into the ship's structure, including welded connections, are to be to the same strength standard as required for the securing and supporting devices.

14.10.2.7 Securing and Locking Arrangement

1 The systems for operation of the securing and locking devices is as follows

(1) Securing devices are to be simple to operate and easily accessible.

(2) Securing devices are to be equipped with a mechanical locking arrangement (self locking or separate arrangement), or are to be

of the gravity type.

(3) The opening and closing systems as well as securing and locking devices are to be interlocked in such a way that they can only operate in the proper sequence. (e.g. interlocking system where the doors can be closed only if securing and locking devices are released.)

(4) Doors which are located partly or totally below the freeboard deck with a clear opening area greater than 6 m^2 are to be provided with an arrangement for remote control of the following from a position above the freeboard deck:

(a) Closing and opening the doors

(b) Associated securing and locking of every door

(5) According to **(4)** above, for doors which are required to be equipped with a remote control arrangement, indication of the open/closed position of the door and the securing and locking device is to be provided at the remote control stations. The operating panels for operation of doors are to be inaccessible to unauthorized persons. (e.g. installing a locking device on the operating panel.) A notice plate, giving instructions to the effect that all securing devices are to be closed and locked before leaving harbour, is to be placed at each operating panel and is to be supplemented by warning indicator lights.

(6) Where hydraulic securing devices are used, the system is to keep the door mechanically closed and locked even in the event of loss of hydraulic fluid. However, if gravity or friction cannot maintain the door mechanically closed, securing devices such as mechanical pin are to be provided. The hydraulic system for securing and locking devices is to be isolated from other hydraulic circuits, when in the closed position.

2 The systems for indication/monitoring are to be as follows

(1) The following **(2)** to **(5)** requirements apply to doors in the boundary of special category spaces or Ro-Ro spaces (spaces not normally subdivided in any way and extending to either a substantial length or the entire length of ship in which goods can be loaded and unloaded normally in a horizontal direction) through which such spaces may be flooded. For cargo ships, where no part of the door is below the uppermost waterline and the area of the door opening is not greater than 6 m^2, then the requirements of this section need not be applied.

(2) The separate indicator lights and alarms mentioned in **(a)** and **(b)** below (hereinafter referred to as "indication and alarm system") are to be provided at the navigation bridge and on the local operating panel. The indication and alarm system is to be provided with a lamp test function and linked with the mode selection switch specified in **14.10.2.7-2(4)**. The indicator light at the navigation bridge is to be designed so as to not be able to be turned off and is to indicate closing and securing conditions for each door. In addition, the required visual alarms are to indicate opening and lock-releasing conditions for each door. The audible alarms may be equipped with a silence function switch. A common indicator can be used for both the securing and locking devices.

(a) Indicator lights to show that the door and inner door are closed and that their securing and locking devices are properly positioned.

(b) In navigation mode, visual and audible alarms to show that the door and inner door are not fully closed and that their securing and locking devices are not properly positioned.

(3) The indication and alarm system specified in **(2)** above is to comply with the following requirements:

(a) The system is to be designed on the fail safe principle and is to be in accordance with the following

i) The indication panel is provided with a power failure alarm, a lamp test and a separate indication for door closed, door locked, door not closed and door not locked.

ii) Limit switches electrically close when the door is closed (when more limit switches are provided they may be connected in series)

iii) Limit switches electrically close when securing arrangements are in place (when more limit switches are provided they may be connected in series)

iv) Two electrical circuits (separate cables even if using multicore cable) with one for the indication of door closed/unclosed and the other for door locked/unlocked

v) Where the limit switches malfunction, an indication to show: unclosed, unlocked and securing arrangement not in place - as appropriate

(b) The power supply for the indication and alarm system is to be independent of the power supply for operating and closing the doors;

(c) The system is to be capable of being supplied from a backup power source regarded as a source of power (e.g. emergency generator with automatic start or electrical batteries) which is capable of supplying power within 45 *seconds* of a failure of the main source of power, or another secure supply of power (e.g. UPS) which is capable of supplying power for 18 *hours*.

(d) The sensors of the display and alarm system are to be protected from water and ice formation, mechanical damage, and are required to have at least IP55 enclosures.

(4) The indication and alarm system at the navigation bridge is to be equipped with a mode selecting function that allows selection between "harbour" and "sea voyage", so that visual and audible alarms specified in **(2)(b)** above will be activated if the vessel leaves a harbour with a side shell or stern door unclosed or with any securing device not in the correct position.

(5) A water leakage detection system with audible alarm and television surveillance is to be arranged to provide an indication to the navigation bridge and to the engine control room of any leakage through the doors.

(6) For passenger ships, a water leakage detection system with audible alarm and television surveillance is to be arranged to provide an indication to the navigation bridge and to the engine control room of any leakage through the doors

14.10.2.8 Reinforcement around Door Openings

1 Shell plating is to be properly rounded at the corners of door openings and is to be reinforced by thicker plate or by doubling plate around the openings.

2 Where frames are cut at door openings, adequate compensation is to be arranged with web frames at sides and stringers or equivalent above and below.

14.10.2.9 Operating and Maintenance Manual

1 An approved Operating and Maintenance Manual for the doors is to be provided on board and contain necessary information on:

(1) Main particulars and design drawings

(a) Special safety precautions

(b) Details of vessel

(c) Equipment and design loading (for ramps)

(d) Key plan of equipment (doors and ramps)

(e) Manufacturer's recommended testing for equipment

(f) Description of equipment

i) Side doors

ii) Stern doors

iii) Central power pack

iv) Bridge panel

v) Engine control room panel

(2) Service conditions

(a) Limiting heel and trim of ship for loading/unloading

(b) Limiting heel and trim for door operations

(c) Doors/Ramps operating instructions

(d) Doors/Ramps emergency operating instructions

(3) Maintenance

(a) Schedule and extent of maintenance

(b) Trouble shooting and acceptable clearances

(c) Manufacturer's maintenance procedures

(4) Register of inspections, including inspection of locking, securing and supporting devices (inspections at monthly intervals and inspections following incidents that could result in damage, including heavy weather or contact in the region of doors), repairs and renewals.

2 Documented operating procedures for closing and securing doors are to be kept on board and posted at the appropriate places.

14.11 Side Scuttles and Rectangular Windows

14.11.1 Application

14.11.1.1 General

1 The requirements in **14.11** apply to side scuttles and rectangular windows on the side shell, superstructures and deckhouses up to the third tier above the freeboard deck.

2 Notwithstanding **-1** above, windows on the deckhouse up to the third tier above the freeboard deck may be as deemed appropriate by the Society for windows that do not interfere with the watertightness of the ship and are deemed as necessary for the ship's operation such as those on the navigation bridge.

3 With respect to the requirements of **-2** above, windows on the navigation bridge up to the third tier above the freeboard deck permitted to be rectangular according to the requirement of **14.11.1.5-2**, may be other than those of Class *E* or Class *F* subject to the following **(1)** and **(2)**.

(1) The navigation bridge is to be separated from spaces below the freeboard deck and spaces within enclosed superstructures by the followings

(a) Weathertight closing devices

(b) Two or more cabin bulkheads or door

In this case, the height of the doorway sill to the navigation bridge is not to be less than that required for closing devices at the position of such a doorway.

(2) The design pressure of such windows is not to be less than the value specified in **14.11.1.4**. The frame of the window is to conform to Class *E* or Class *F* according to the location it is installed, and the window is to have appropriate weathertightness.

4 With respect to the requirements of **14.11**, side scuttles with round or oval openings having areas exceeding 0.16 m^2 are to be treated as windows.

5 With respect to the requirements of **14.11,** for ships having unusually large freeboard, "freeboard deck" may be read as "assumed freeboard deck". However, side scuttles for spaces below the actual freeboard deck or spaces considered as buoyancy in stability calculations are to be class *A* side scuttles, class *B* side scuttles, or equivalent thereto. In such cases, the deadlight is not to be omitted.

6 The design pressures of windows in the fore end bulkheads of superstructures and deckhouses above the third tier located above the freeboard deck and forward of $0.5L_C$ are not to be less than the minimum design pressures given in **Table 14.11.1-3**. However, this requirement may be dispensed with if the height of the highest deck at the fore end is not less than $22m$ above the designed maximum load line, or if cargo, etc. is regularly loaded onto exposed decks in front of the windows (e.g. container carriers).

14.11.1.2 Application of Side Scuttles

1 Side scuttles inboard are to be class *A* side scuttles, class *B* side scuttles, or class *C* side scuttles complying with the requirements in **Chapter 7, Part L** or equivalent thereto.

2 Class *A* side scuttles, class *B* side scuttles and class *C* side scuttles are to be so arranged that their design pressure is less than the maximum allowable pressure determined by their nominal diameters and grades. (*See* **14.11.1.4**)

3 Side scuttles to spaces below the freeboard deck and those provided to sunken poops are to be class *A* side scuttles, class *B* side scuttles or equivalent thereto.

4 Side scuttles exposed to direct impact from waves, or that are to spaces within the first tier of side shell or superstructures, first tier deckhouses on the freeboard deck which have unprotected deck openings leading to spaces below the freeboard deck inside, or deckhouses considered buoyant in stability calculations, are to be class *A* side scuttles, class *B* side scuttles or equivalent thereto.

5 Where an opening in the superstructure deck or in the top of the deckhouse on the freeboard deck which gives access to a space below the freeboard deck or to a space within an enclosed superstructure is protected by the deckhouse or companion, the side scuttles fitted to those spaces which give direct access to an open stairway are to be class *A* side scuttles, class *B* side scuttles or equivalent thereto. However, where the height of superstructures and deckhouses is greater than standard quarterdeck height specified in **V2.2.1-1, Part V of the Guidance**, and where cabin bulkheads or doors separate side scuttles from a direct access leading below the freeboard deck, the side scuttles may be class *B* side scuttles or class *A* side scuttles without deadlights.

6 Side scuttles to the spaces in the second tier on the freeboard deck considered buoyant in stability calculations are to be class *A* side scuttles, class *B* side scuttles or equivalent thereto.

7 In ships with an unusually reduced freeboard, side scuttles located below the waterline after flooding into compartments are to

be of a fixed type.

8 All side scuttles in way of the anchor housing and other similar places where they are liable to be damaged are to be protected by strong gratings.

14.11.1.3 Application of Rectangular Windows

1 Rectangular windows inboard are to be class *E* rectangular windows and class *F* rectangular windows complying with the requirements in **Chapter 8, Part L** or equivalent thereto.

2 Class *E* rectangular windows and class *F* rectangular windows are to be so arranged that the design pressure is less than the maximum allowable pressure determined by their nominal sizes and grades. (*See* **14.11.1.4**)

3 Rectangular windows to spaces in the second tier of the freeboard deck which gives direct access to spaces within the first tier of enclosed superstructures or below the freeboard deck are to be provided with hinged deadlights or externally fixed shutters. Where cabin bulkheads or doors separate the space within the second tier from spaces below the freeboard deck or spaces within the first tier of enclosed superstructures, rectangular windows to the spaces within the second tier may be regarded as rectangular windows without shutters or deadlights. In such cases, deckhouses situated on the following spaces may be regarded as being in the second tier of the freeboard deck.

(1) A raised quarterdeck of a height equal to or greater than the standard quarterdeck height specified in **1.4.3.3**.

(2) The deck of a superstructure of a height equal to or greater than the standard quarterdeck height specified in **1.4.3.3**.

(3) The deck of a deckhouse of a height equal to or greater than the standard quarterdeck height specified in **1.4.3.3**.

4 Rectangular windows to spaces in the second tier of the freeboard deck considered buoyant in stability calculations are to be provided with hinged deadlights or externally fixed shutters.

14.11.1.4 Design Pressure and Maximum Allowable Pressure

1 The design pressure of side scuttles and rectangular windows are to be less than the maximum allowable pressure (*See* **Table 14.11.1-1** and **Table 14.11.1-2**) determined by their nominal diameters and grades. The design pressure P(*kPa*)is to be determined using the following equation.

$$P = ac(bf - y)$$

a, c, b and f : Coefficients as specified in **4.9.2.2**. The value of coefficient "*a*" for side scuttles for spaces below the freeboard deck or spaces within superstructures may be determined using the formula for the first tier deckhouse in the requirements of **4.9.2.2**

y : Vertical distance (m) from side scuttle sill to summer load line (or timber load line if given)

2 Notwithstanding the requirement of **-1** above, the design pressure is not to be less than the minimum design pressure given in **Table 14.11.1-3**.

Table 14.11.1-1 Maximum Allowable Pressure of Side Scuttles

Class	Nominal Diameter(*mm*)	Glass thickness (*mm*)	Maximum allowable pressure (*kPa*)
A	200	10	328
	250	12	302
	300	15	328
	350	15	241
	400	19	297
B	200	8	210
	250	8	134
	300	10	146
	350	12	154
	400	12	118
	450	15	146
C	200	6	118
	250	6	75
	300	8	93
	350	8	68
	400	10	82
	450	10	65

Table 14.11.1-2 Maximum Allowable Pressure of Rectangular Windows

Class	Nominal size Width(*mm*)×height(*mm*)	Glass thickness(*mm*)	Maximum allowable pressure(*kPa*)
E	300×425	10	99
	355×500	10	71
	400×560	12	80
	450×630	12	63
	500×710	15	80
	560×800	15	64
	900×630	19	81
	1000×710	19	64
F	300×425	8	63
	355×500	8	45
	400×560	8	36
	450×630	8	28
	500×710	10	36
	560×800	10	28
	900×630	12	32
	1000×710	12	25
	1100×800	15	31

Table 14.11.1-3 Minimum Design pressure

position	L_C is 250 m and under	L_C exceeds 250 m
Exposed front bulkhead of the first tier superstructure	$25 + L_C/10$ (kPa)	50(kPa)
Other places	$12.5 + L_C/20$ (kPa)	25(kPa)

14.11.1.5 General Requirement for Position of Side Scuttles and Rectangular Windows

1 General requirements for position of side scuttles are to be as follows

(1) No side scuttle is to be provided where its sill is below a line drawn parallel to the freeboard deck at side and having its lowest point 2.5% of the breadth of the ship (B') specified in **2.3.1.2(11)** or 500 mm, whichever is greater, above the deepest subdivision draught specified in **2.3.1.2(3)**. Side scuttles that have their sill below the freeboard deck and which are of a hinged type are to be provided with locking arrangements.

(2) Notwithstanding the requirements of **(1)** above, no side scuttle is to be provided at any space solely engaged in the carriage of cargoes.

(3) The deadlights of side scuttles deemed appropriate by Society may be portable, provided that such scuttles comply with the following requirements **(a)** to **(d)**:

(a) Fitting class A side scuttles or class B side scuttles is not required.

(b) Such side scuttles are fitted abaft one eighth of the length for freeboard from the forward perpendicular. (L_f)

(c) Such side scuttles are fitted above a line drawn parallel to the bulkhead deck at side and having its lowest point at a height of 3.7 m plus 2.5% of the breadth of the ship (B') the deepest subdivision draught specified in **2.3.1.2(3)**.

(d) Such portable deadlights are to be stowed adjacent to the side scuttles they serve.

(4) Automatic ventilating side scuttles is not to be fitted in the shell plating below the freeboard deck.

2 No rectangular window is to be provided to spaces below the freeboard deck, the first tier of superstructures, and the first tier of deckhouses considered buoyant in stability calculations or which protect deck openings leading to spaces below the freeboard deck inside.

14.12 Ventilators

14.12.1 Ventilator Coamings

14.12.1.1 Height of Ventilator Coamings

The height of ventilator coamings above the upper surface of the deck is to be at least 900 mm in Position I and 760 mm in Position II as specified in **1.4.3.2**. Where the ship has an unusually large freeboard or where the ventilator serves spaces within unenclosed superstructures, the height of ventilator coamings may be suitably reduced.

14.12.1.2 Thickness of Ventilator Coamings

1 The thickness of ventilator coamings in Positions I and II specified in **1.4.3.2** leading to spaces below the freeboard deck or within enclosed superstructures is not to be less than that given by Line 1 in **Table 14.12.1-1**. Where the height of the coamings is reduced by the requirements in **14.12.1.1**, the thickness may be suitably reduced.

2 Where ventilators pass through superstructures other than enclosed superstructures, the thickness of ventilator coamings in the superstructures is not to be less than that given by Line 2 in **Table 14.12.1-1**.

Table 14.12.1-1 Thickness of Ventilator Coamings

Thickness of coaming plate	Outside diameter of ventilator(*mm*)					
(*mm*)	80 and under	160	230	330	480	730 and over
Line 1	6	8.5			10	
Line 2	4.5		6		7.5	10
Other	4.5		6			

Notes:

For intermediate values of outside diameter of ventilator, the thickness of coaming plate is to be obtained by linear interpolation.

14.12.1.3 Connection

Ventilator coamings are to be efficiently connected to the deck and where their height exceeds 900 *mm* are to be specially supported.

14.12.2 Cowls

14.12.2.1

Ventilator cowls are to be fitted closely to coamings and are to have housings of not less than 380 *mm*, except that a smaller housing may be permitted for ventilators of not greater than 200 *mm* in diameter.

14.12.3 Closing Appliances

14.12.3.1

1 Closing appliances required in **14.12.3.1** are to be of steel or other equivalent materials. The mechanical ventilation systems are to be provided with warning plates stating that the closing appliances of mechanical ventilation systems are generally to be closed after the ventilation system has been shut off, unless reinforced.

2 Ventilators to machinery and cargo spaces are to be provided with a means for closing the openings that is capable of being operated from outside the spaces in case of fire. Furthermore, these ventilators are to be provided with an indicator that enables confirmation whether the shutoff is open or closed from outside of the ventilator as well as suitable means of inspection for closing appliances. In cases where internal checks of ventilators are impossible even if equipment installed on board is used, e.g. large ventilators that have cowls which cannot be easily removed or ventilators that have fans installed above, an inspection port at least 150 *mm* in diameter is to be installed in the coaming of the ventilator. In addition, such inspection ports are to be provided with suitable covers so as not to spoil the water tightness/weather tightness and fire resistance required for the coaming of ventilators.

3 All ventilator openings in exposed positions on the freeboard and superstructure decks are to be provided with efficient weathertight closing appliances. Where the coaming of any ventilator extends to more than 4.5 *m* above the surface of the deck in Position I or more than 2.3 *m* above the surface of the deck in Position II specified in **1.4.3.2**, such closing appliances may be omitted unless required in **-2**.

4 In ships not more than 100 *m* in length for freeboard, the closing appliances mentioned in **-3** are to be permanently provided; where not so provided in other ships, they are to be conveniently stowed near the ventilators to which they are to be fitted.

14.12.4 Ventilators

14.12.4.1 Ventilators for Deckhouses

The ventilators for the deckhouses which protect the companionways leading to spaces below the freeboard deck are to be equivalent to those for the enclosed superstructures.

14.12.4.2 Ventilators for Emergency Generator Room

1 The coamings of ventilators supplying the emergency generator room is to extend to more than 4.5 *m* above the surface of the deck in Position I, and more than 2.3 *m* above the surface of the deck in Position II specified in **1.4.3.2**. The ventilator openings are not to be fitted with weathertight closing appliances, except for those complying with **1.3.5-2, Part D**. However, where due to vessel size and arrangement this requirement is not practicable, the height of ventilator coamings is to be in accordance with the following requirements **(1)** or **(2)**.

(1) Where the emergency generator room is located in an enclosed superstructure, the ventilators are to have coamings in

compliance with 14.12.1.1, and are to be fitted with weathertight closing appliances in combination with other suitable arrangements to ensure adequate ventilation.

(2) In cases other than **(1)** above, where the emergency generator room has no opening leading to a space below the freeboard deck, the height of coamings of ventilators to supply air to the emergency generator room, above the upper surface of the deck, is to be at least 900 *mm* above the surface of the deck in Position I or 760 *mm* above the surface of the deck in Position II specified in 1.4.3.2. In addition, these ventilator openings are to be fitted with suitable protection devices such as louvers to prevent the intrusion of sea-water. Openings on the boundaries of the emergency generator room are to be treated in a similar manner.

2 The weathertight closing appliances and louvers specified in **-1** above are also to comply with requirements specified in 1.3.5-2, Part D.

14.12.4.3 Additional Requirement for Ventilators Fitted on Exposed Fore Deck

1 The ventilators located on the exposed deck forward of 0.25 L_C are to be of sufficient strength to resist green sea force if the height of the exposed deck in way of those ventilators is less than 0.1 L_C or 22 *m* above the designed maximum load line, whichever is smaller.

2 The requirement of **-1** above does not apply to the cargo tank venting systems and inert gas systems of tankers, ships carrying liquefied gases in bulk and ships carrying dangerous chemicals in bulk.

3 The strength of ventilators and their closing devices specified in **-1** are to comply with the following requirements.

(1) Applied Loads

Forces acting in the horizontal direction on the pipe and its closing device are to be calculated by using the pressure (p) obtained from the following formula and the largest projected area of each component.

$p = 0.5\rho V_w{}^2 C_d C_s C_p$ (kN/m^2)

ρ : Density of sea water 1.025(t/m^3)

V_w : Velocity of water over the fore deck (*m/sec*) given by the following:

13.5 (*m/sec*) : for $h_{ed} \leq 0.5h_t$

$13.5\sqrt{2\left(1-\frac{h_{ed}}{h_t}\right)}$ (*m/sec*) : for $0.5h_t < h_{ed} < h_t$

h_{ed} : Distance from the designed maximum load line to exposed deck (*m*)

h_t : 0.1 L_1 or 22 *m* whichever is the lesser

C_d : Shape coefficient, taken as 0.5 for pipes, 1.3 for ventilator head in general and 0.8 for ventilator head of cylindrical form with its axis in the vertical direction

C_s : Slamming coefficient, taken as 3.2

C_p : Protection coefficient given by the following

For pipes and ventilator heads located immediately behind a breakwater or forecastle: 0.7

Elsewhere and immediately behind a bulwark: 1.0

(2) Strength Requirements

(a) Bending moments and stresses in air and ventilator pipes are to be calculated at critical positions, such as at penetration pieces, at weld or flange connections, and at toes of supporting brackets. Bending stresses in the net section are not to exceed 0.8 σ_y , where σ_y is the specified minimum yield stress or 0.2% proof stress of steel at room temperature. Irrespective of corrosion protection, a corrosion addition to the net section of 2.0 *mm* or more is then to be applied.

(b) For standard ventilators of 900 *mm* height closed by heads of not more than the tabulated projected area, pipe thickness standards are to be according to Table 14.12.4-1. Where brackets are required, three or more radial brackets of a gross thickness of 8 *mm* or more, of a minimum length of 100 *mm*, and a height according to Table 14.12.4-1 are to be fitted; but they need not extend over the joint flange for the head. Bracket toes at the deck are to be suitably supported.

(c) For other configurations, loads according to **(1)** are to be applied, and means of support are to be determined in order to comply with the requirements of **(a)**. Brackets, where fitted, are to be of suitable thickness and length according to their height. Pipe thickness is not to be less than as indicated in column 1 of Table 14.12.1-1.

(d) All component parts and connections of the air pipe or ventilator are to be capable of withstanding the loads defined in **(1)**.

(e) Rotating type mushroom ventilator heads are deemed unsuitable.

Table 14.12.4-1 900 *mm* Ventilator Pipe Thickness and Bracket Standards

Nominal pipe diameter(*mm*)	Minimum fitted gross thickness(*mm*)	Maximum projected area of head(cm^2)	Height of brackets(*mm*)
80*A*	6.3	-	460
100*A*	7.0	-	380
150*A*	8.5	-	300
200*A*		550	-
250*A*		880	-
300*A*		1200	-
350*A*		2000	-
400*A*		2700	-
450*A*		3300	-
500*A*		4000	-

14.13 Gangways

14.13.1 General

14.13.1.1

1 Satisfactory means (in the form of guardrails, life lines, gangways or under deck passages, etc.) are to be provided for the protection of the crew in getting to and from their quarters, the machinery space and all other parts used in the necessary work of the ship.

2 Where a suitable passage facility is unable to be secured on or under the deck due to cargoes loaded on the exposed deck, life lines or guardrails are to be provided on the cargo on or near the centre line of the ship. Where a lumber freeboard is assigned, in addition to the above, life lines or guardrails, the height of which is at least 1.0 *m* and the clearance between courses is less than 350 *mm*, are to be fitted on both sides of the deck lumber.

3 For means of protecting crew passageways on the exposed freeboard or raised quarterdeck, a means from **Table 14.13.1-1** is to be provided according to the assigned freeboard or location onboard. However, the following is to be noted.

(1) Where wire ropes are fitted, turnbuckles are to be provided to ensure their tautness.

(2) Wire ropes may only be acceptable in lieu of guard rails in special circumstances and then only in limited lengths.

(3) Lengths of chain may only be acceptable in lieu of guard rails where fitted in between two fixed stanchions.

(4) Where stanchions are fitted, every third stanchion is to be supported by a bracket or stay.

(5) Removable or hinged stanchions are to be capable of being locked in the upright position.

(6) A means of passage over obstructions, if any, such as pipes or other fittings of a permanent nature, is to be provided.

(7) Generally, the width of the gangway and deck-level walkway is not to exceed 1.5 *m*.

4 In **Table 14.13.1-1**, “a” to “f” refer to installations and 1) to 5) refer to locations onboard, as specified in the following:

a : A well lighted and ventilated under-deck passageway (clear opening 0.8 *m* wide, 2.0 *m* high) as close as practicable to the freeboard deck, connecting and providing access to the locations in question

b : A permanent and efficiently constructed gangway fitted at or above the level of the superstructure deck on or as near as practicable to the centre line of the ship, providing a continuous platform at least 0.6 *m* in width and a non-slip surface, with guard rails extending on each side throughout its length Guard rails is to be at least 1 *m* high with courses as required in **14.8.2.1-2** and **14.8.2.1-3, Part C**, and supported by stanchions spaced not more than 1.5 *m*, and with a foot-stop.

c : A permanent walkway at least 0.6 *m* in width fitted at freeboard deck level consisting of two rows of guard rails with stanchions spaced not more than 3 *m* apart. The number of courses of rails and their spacing are to be as required by **14.8.2.1-2** and **14.8.2.1-3, Part C**. On Type B ships, hatch coamings not less than 0.6 *m* in height may be regarded as forming one side of the walkway, provided that between the hatches two rows of guard rails are fitted.

d : A 10 *mm* minimum diameter wire rope lifeline supported by stanchions not more than 10 *m* apart, or a single hand rail or

wire rope attached to hatch coamings, continued and adequately supported between hatches

e : A permanent and efficiently constructed gangway for tankers fitted at or above the level of the superstructure deck on or as near as practicable to the centre line of the ship:

- located so as not to hinder easy access across the working areas of the deck
- providing a continuous platform at least 1.0*m* in width
- constructed of fire resistant and non-slip material
- fitted with guard rails extending on each side throughout its length; guard rails are to be at least 1.0*m* high with courses as required by **14.8.2.1-2** and **14.8.2.1-3**, and supported by stanchions spaced not more than 1.5*m*
- provided with a foot stop on each side
- having openings (not more than 40*m* apart) with ladders where appropriate, to and from the deck
- having shelters of substantial construction set in way of the gangway at intervals not exceeding 45*m* if the length of the exposed deck to be traversed exceeds 70*m*

  Every such shelter is to be capable of accommodating at least one person (1×1×2*m* in size as standard, and at least 0.6*m* in width of entrance), be so constructed as to afford weather protection on the forward, port and starboard sides and the strength is to be in accordance with the requirements of **11.3.3**.

f : A permanent and efficiently constructed walkway fitted at or above the level of the freeboard deck on or as near as practicable to the centre line of the ship having the same specifications as those for a permanent gangway listed in the arrangements "**e**" except for footstops

On type B ships (certified for the carriage of liquids in bulk), with a combined height of hatch coamings and fitted hatch covers of together not less than 1*m* in height, the hatch coamings may be regarded as forming one side of the walkway, provided that between the hatches two rows of guard rails are fitte

1) : At or near the centre line of the ship; or fitted on hatch covers at or near the centre line of the ship
2) : Fitted on each side of the ship
3) : Fitted on one side of the ship, provision being made for fitting on either side
4) : Fitted on one side only
5) : Fitted on each side of the hatches as near to the centre line as practicable

Table 14.13.1-1 Protection of Crew on Exposed Deck or Raised Quarter Deck

Locations of access in Ship	Assigned Summer Freeboard	Acceptable arrangements according to type of freeboard assigned:			
		Type A	Type B-100	Type B-60	Type B&B+
1.1 Access to Midship Quarters 1.1.1 Between poop and bridge, 1.1.2 Between poop and deckhouse containing living quarters or navigating equipment, or both.	≤ 3000 *mm*	a b1) e	a b1) e	a b1) c1) e f1)	a b1) c1) c2) c4) d1) d2) d3) e f1) f2) f4)
	> 3000 *mm*	a b1) e	a b1) e	a b1) c1) c2) e f1) f2)	
1.2 Access to Ends 1.2.1 Between poop and bow (if there is no bridge) 1.2.2 Between bridge and bow.	≤ 3000 *mm*	a b1) c1) e f1)	a b1) c1) c2) e f1) f2)	a b1) c1) c2) e f1) f2)	
1.2.3 Between a deckhouse containing living quarters or navigating equipment, or both, and bow 1.2.4 In the case of a flush deck vessel, between crew accommodation and the forward and after ends of ship	> 3000 *mm*	a b1) c1) d1) e f1)	a b1) c1) c2) d1) d2) e f1) f2)	a b1) c1) c2) c4) d1) d2) d3) e f1) f2) f4)	

14.13.2 Tankers

14.13.2.1

1 The requirements in **14.13.2** apply to tankers, ships carrying liquefied gases in bulk and ships carrying dangerous chemicals in bulk (hereinafter referred to as "tankers" in 14.13.2) engaged in international voyages.

2 Tankers are to be provided with the means to enable crew to gain safe access to their bow even in severe weather conditions.

3 Notwithstanding **14.13.1.1-2**, safe access to the bow is to be provided by at least one permanent arrangement noted in **Table 14.13.2-1**.

4 Notations in **Table 14.13.2-1** are as specified in **14.13.1-4**.

5 For tankers less than 100 *m* in length, the minimum width of the gangway platform or deck level walkway may be reduced to 0.6 *m*.

6 For gas carriers, where gangways are provided sufficiently high above the freeboard deck or where permanently constructed arrangements achieve an equivalent level of safety, the Society may approve modifications to the requirements of **-3** above.

"Sufficiently high above the freeboard deck" means a vertical height of more than 3 times the standard superstructure height specified in **1.4.3.3**.

Table 14.13.2-1 Protection of Crew on Exposed Freeboard Deck or Raised Quarter Deck for Tankers

Location of access in Ship	Assigned Summer Freeboard	Acceptable arrangements according to type of freeboard assigned:
2.1Access to Bow 2.1.1 Between poop and bow	$\leq (A_f + H_s)^*$	A E f1) f5)
2.1.2 Between a deckhouse containing living accommodation or navigating equipment or both, and bow 2.1.3 In the case of a flush deck vessel, between crew accommodation and the forward and after ends of ship	$> (A_f + H_s)^*$	A E f1) f2)
2.2Access to After End 2.2.1 In the case of a flush deck vessel, between crew accommodation and the after end of ship	As required in **1.2.4** of **Table 14.13.1-1** for other types of ships	

*

A_f : Minimum summer freeboard calculated as type A ship regardless of the type of freeboard actually assigned

H_s : Standard height of superstructure as defined in **1.4.3.3**

14.14 Means of Embarkation and Disembarkation

14.14.1 General

14.14.1.1

1 Ships are to be provided with appropriate means of embarkation on and disembarkation from ships for use in port and in port related operations, unless the cases where a ship is engaged in voyages between designated ports where appropriate shore accommodation/embarkation ladders (platforms) are provided.

2 With respect to the requirements specified in **14.14.1**, the means of embarkation and disembarkation are to be in accordance with the following. However, ships that have small freeboards and are provided with boarding ramps needs not to be in accordance with the following:

(1) Accommodation ladders and gangways are to be constructed based on *ISO* 5488:1979 "*Shipbuilding - accommodation ladders*", *ISO* 7061:1993 "*Shipbuilding - aluminium shore gangways for seagoing vessels*" or standards where deemed appropriate by the Society. Accommodation ladder winches are to be constructed based on *ISO* 7364:1983 "*Shipbuilding and marine structures – deck machinery – accommodation ladder winches*" or standards where deemed appropriate by the Society or are to be the one pursuant to aforementioned standards.

(2) The structure of the accommodation ladders and gangways and their fittings and attachments are to be such as to allow regular inspection, maintenance of all parts and, if necessary, lubrication of their pivot pin. Special care is to be paid to welding connection.

(3) As far as practicable, the means of embarkation and disembarkation are to be sited clear of the working area and are not to be placed where cargo or other suspended loads may pass overhead. However, in cases where the Society recognizes unavoidable circumstances, the means of embarkation and disembarkation may be installed within the above mentioned areas or places,

provided that safe passage is ensured through description in operation manuals, the installation of warning plates, and so on.

(4) Each accommodation ladder is to be of such a length to ensure that, at a maximum design operating angle of inclination, the lowest platform will be not more than 600 *mm* above the waterline in the lightest seagoing condition (in this regard, trim is to be the condition resulting from the loading condition of the lightest seagoing condition), as defined in *SOLAS* Regulation III/3.13. However, in cases where the height of the embarkation/disembarkation deck exceeds 20*m* above the waterline or is deemed appropriate by the Society, an alternative means of providing safe access to the ship or supplementary means of access to the bottom platform of the accommodation ladder may be accepted.

(5) The arrangement at the head of the accommodation ladder is to provide direct access between the ladder and the ship's deck by a platform securely guarded by handrails and handholds. The ladder is to be securely attached to the ship to prevent overturning.

(6) Each accommodation ladder or gangway is to be clearly marked at each end with a plate showing the restrictions on the safe operation and loading, including the maximum and minimum permitted design angles of inclination, design load, maximum load on bottom end plate, etc. Where the maximum operational load is less than the design load, it is also to be shown on the marking plate.

(7) Gangways are not to be used at an angle of inclination greater than 30 *degrees* from the horizontal and accommodation ladders are not to be used at an angle greater than 55 *degrees* from the horizontal, unless designed and constructed for use at angles greater than these and marked as such.

(8) Gangways are not to be secured to a ship's guardrails unless they have been designed for that purpose. If positioned through an open section of bulwark or railings, any remaining gaps are to be adequately fenced.

(9) Adequate lighting is to be provided to illuminate the means of embarkation and disembarkation, the position on deck where persons embark or disembark and the controls of the arrangement.

(10) A lifebuoy equipped with a self-igniting light and a buoyant lifeline is to be available for immediate use in the vicinity of the embarkation and disembarkation arrangement when in use. This lifebuoy is not to be taken into account when determining the minimum number and distribution of lifebuoys as required by *SOLAS* Reg. III/32.1.1.

(11) A safety net is to be mounted and arrangements that enable the installation of such net are to be provided to prevent falling accident in cases where it is possible that a person may fall from the means of embarkation and disembarkation or between the ship and quayside.

14.15 Void

14.16 Means of Access

14.16.1 General

14.16.1.1 Purpose

This **14.16** specifies the means of access for examinations of the hull structure.

14.16.1.2 Application

Ships are to be provided with means of access for examinations in accordance with the following **(1)** to **(3)**.

(1) For compartments other than those listed in **(2)** and **(3)**, the requirements of **14.16.2** are to be complied with.

(2) Each space within the cargo area and fore peak tanks of a ship listed in **(a)** or **(b)** below is to comply with the requirements of **14.16.3**.

(a) Oil tankers as defined in **1.3.1(11), Part B** and of not less than 500 *gross tonnage*, except the following **i)** and **ii)**

i) Oil/chemical tankers which are to comply with the requirements for ships carrying dangerous chemicals in bulk as defined in **2.1.43, Part A**

ii) Oil tankers other than those having integral tanks for the carriage of oil in bulk

(b) Bulk carriers as defined in **1.3.1(13), Part B** of not less than 20,000 *gross tonnage*

(3) Each space within the cargo area and fore peak tanks of a ship listed in **(2)(a)i)** and **ii)** above are to be in accordance with the following

(a) Each space within the cargo area and fore peak tanks of ships listed in **(2)(a)i)** of not less than 500 *gross tonnage* are to

comply with the requirements of **14.16.3**. However, for cargo tanks of the ships may be applied the following requirements only.

i) **14.16.3.3-1** and **-2**

ii) **14.16.3.5-5**, **-6**, **-7** and **-8** (in relation to access to tanks/spaces)

iii) **14.16.3.6**

(b) Each space within the cargo area and fore peak tanks of ships listed in **(2)(a)ii)** of not less than 500 *gross tonnage* may be subject to either **14.16.2** or **14.16.3**. However, the requirements of **14.16.2.2-3**. and **14.16.2.3-3** are to be applied to the means of access to the hold spaces for independent tanks.

14.16.2 General

14.16.2.1 General

1 Peak tanks, deep tanks, cofferdams, cargo oil tanks, cargo holds with relative high bilge hopper tanks, and other similar enclosed spaces are to be provided with means of access, i.e. stages, ladders, steps or other similar facilities for internal examinations in safety. However, such means are not required in aft peak tanks and deep tanks which are exclusively loaded with fuel oil or lubrication oil.

2 Means of access specified in **-1** above are arranged for the purpose of detecting disorders such as damage, corrosion, etc. which may occur on the boundaries of compartments and important internal structural members fitted thereon, such as transverse rings, web frames, girders, struts, etc. at an early stage. Accordingly, the arrangement is to be such that any one side of these members can be easily and safely inspected from within a distance of not more than 3 *m*. This distance may be properly modified, depending on the actual conditions, when easy access and/or ample illumination is available.

3 The means of access may be those permanently fixed to the hull, such as stagings, walkways, ladders and steps (hereinafter, referred to as "permanent means of access") and those that are prepared for temporary use, such as inflatable rafts and portable ladders. Where structural members can be utilized as stagings or walkways, they can be regarded as permanent means of access.

14.16.2.2 Means of Access within Spaces

1 Safe access to peak tanks, deep tanks, cofferdams, cargo oil tanks, cargo holds and other similar enclosed spaces is to be, in general, direct from the open deck and served by at least one access hatchway or manhole and ladder.

2 Notwithstanding **-1** above, the following **(1)** to **(3)** may be applied.

(1) Safe access to lower spaces of spaces divided vertically, may be from other spaces, subject to consideration of ventilation aspects.

(2) The provision of fixed ladders is not required for spaces not greater than 1.5 *m* in height measuring from the bottom to the top of the open deck on ships of less than 300 gross tonnage.

(3) The permanent means of access where deemed as impracticable by the Society may be placed with portable ladders.

3 The openings of hatches or manholes for the means of access to the hold spaces for independent tanks are to be not less than those required by **g** of **Table 14.16.2-1**.

14.16.2.3 Means of Access within Spaces

1 The following spaces and places are to be provided with permanent means of access.

(1) Fore peak tanks

(2) Aft peak tanks

(3) Cofferdams

(4) One side tank situated at or near the forward end of the parallel body of the hull and one or more tank(s) in other parts (water ballast tank if possible)

(5) Any one or more tank(s) from among centre tanks

(6) Watertight and oiltight bulkheads having horizontal girders

(7) Cargo holds with bilge hopper tanks whose height is over 3 *m* at side from the top of inner bottom plates to upper end of bilge hopper tanks

(8) Other enclosed spaces similar to **(1)** to **(7)**

2 The permanent means of access in the spaces and places prescribed in **-1** above are to be arranged in accordance with the following.

(1) In side tanks, ladders or steps are to be so arranged that all corners and structural ends of one or more transverse ring(s) (preferably at mid-tank) can be inspected.

(2) In centre tanks, ladders or steps are to be so arranged that both ends of one or more bottom transverse(s) (preferably at mid-length of tank) can be inspected.

(3) For watertight and oiltight bulkheads with horizontal girders, ladders or steps are to be arranged for access to such girders.

(4) Ladders or steps for access to a height up to about 1.5 *m* above the bottom or a horizontal girder may be omitted where access is available by means of longitudinal frames, horizontal stiffeners, etc.

(5) On both sides of each cargo hold specified in **-1(7)** above at the forward, middle and aft parts, ladders (or steps) and hand rails are to be available for inspection of lower parts of hold frames together with their end brackets. Hand rails are to be fitted within the spaces between three hold frames at least. However, a portable ladder may be acceptable instead of fixed ladders (or steps) and hand rails may be omitted subject to approval by the Society.

3 Where unavoidable obstructions such as hull structural members of not less than 600 *mm* in height impedes access to hull structures within the space, appropriate facilities such as ladders or steps are to be fitted.

4 The clearances for inspections and means of access within the hold spaces for independent tanks is to be not less than those required by **a** to **f** of **Table 14.16.2-1**.

Table 14.16.2-1 Clearances for inspections and means of access within the hold spaces for independent tanks

Location(1)	ships not less than 5,000 tonnes deadweight	ships less than 5,000 tonnes deadweight
a. insulation ~ inner bottom plate	600 *mm*	600 *mm*
b. insulation ~ side frame	600 *mm*	450 *mm*
c. insulation ~ girder	450 *mm*(2)	450 *mm*(2)
d. insulation ~ upper deck	600 *mm*	600 *mm*
e. insulation ~ deck beam	600 *mm*	450 *mm*
f. insulation ~ deck girder	450 *mm*(2)	450 *mm*(2)
g. horizontal opening	600 *mm* ×600 *mm*	500 *mm* ×500 *mm*

Notes:

(1) Refer to **Fig. 14.16.2-1** for the relevant locations

(2) Where openings are provided in order to make the relevant location readily accessible from each side, it may be 0.5 times the width of face plate or 50 *mm*, whichever is smaller.

Fig. 14.16.2-1 Location

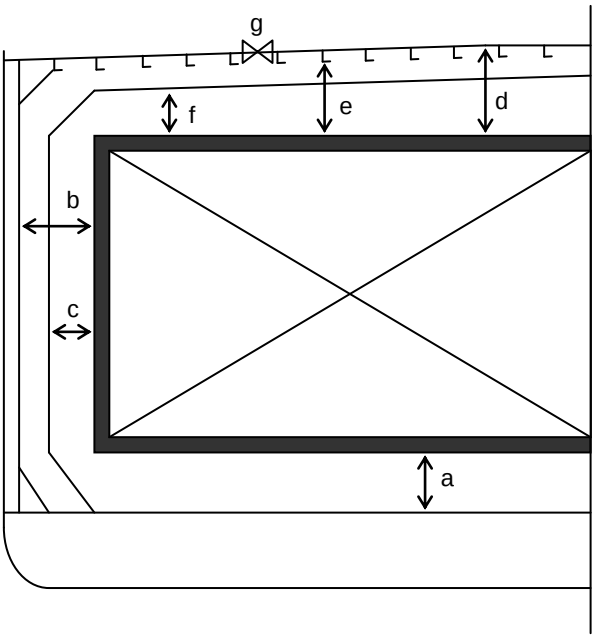

14.16.2.4 Specifications of Means of Access and Ladders

1 Means of access are to be in accordance with the following **(1)** to **(4)** to be safe to use.

(1) Ladders and steps are not to be fitted on a surface which is unnecessarily outside the inside line of the hatch coaming.

(2) Hand grips are to be provided appropriately.

(3) Ladders and steps are to be extended upward and downward as deemed necessary.

(4) No hollows are to be allowed in flights of ladders.

2 Permanent means of access are to be of robust construction.

3 Stagings and walkways forming sections of permanent means of access are to be constructed as follows.

(1) The clear width of stagings and walkways is not to be less than 600 *mm*, except for going around vertical webs where the minimum clear width may be reduced to 450 *mm*.

(2) Elevated passageways forming sections of a permanent means of access are to be provided with guard rails of 750 *mm* in height on the open side.

(3) Where horizontal girders or similar structures are utilized as stagings, etc., lightening holes of a diameter exceeding 100 *mm* are to have fixed gratings.

4 Ladders and steps utilized for permanent means of access are to be constructed as following **(1)** and **(2)**.

(1) The width of ladders and steps is to be not less than 250 *mm* and the distance from the wall to the free edge of footsteps, not less than 120 *mm*. Footsteps are to be arranged at a regular interval not less than 250 *mm* but not more than 350 *mm*, or of an equivalent arrangement. However, when steps are installed as fixed inspection equipment as specified in **14.16.2.3-1(7)**, the distance from the wall surface to the far end of the treads may be reduced by attaching protective cables, etc. to both sides of the steps.

(2) Landings are to be provided at an interval not exceeding 9 *m* on vertical ladders and at a vertical interval of 12 *m* on inclined ladders.

5 Where portable ladders are utilized in accordance with the requirements of **14.16.2.3-2(5)**, appropriate measures such as horizontal bars which are provided between two transverse frames for hanging a ladder, are to be taken for their safe use.

6 Where rafts are utilized for means of access, they are to comply with the following **(1)** to **(3)** conditions.

(1) The tanks are to have pumping arrangements for filling and discharging a capacity appropriate for ordinary water ballast tanks.

(2) Where swash bulkheads are provided in the tank, they are to have openings for passage in their upper part, or each part that is separated from others by such swash bulkheads is to have an access hatch or manhole. The dimensions of these hatches or manholes may be determined assuming that rafts will be inflated in the tanks.

(3) The raft is to be capable of carrying 3 persons, and where an inflatable type is used, be able to stay afloat safely even if one of the airtight chambers is broken. A ship is to have at least one raft, but it is recommended to have at least two.

14.16.2.5 Plans for means of Access

Plans showing the arrangement of means of access to peak tanks, deep tanks, cofferdams, cargo oil tanks, cargo holds with relative high bilge hopper tanks, and other similar enclosed spaces are to be kept on board.

14.16.3 Means of Access in the cargo area of Oil Tankers and Bulk Carriers

14.16.3.1 General

1 Each space within the cargo area and fore peak tanks are to be provided with means of access to enable overall and close-up examinations and thickness measurements of the ship's structures to be carried out safely.

2 Appropriate means of access are to be provided to enable close-up examinations of positions where close-up examinations and thickness measurements are required in accordance with the requirements of **Part B** of the Rules and positions with critical structural areas. In application, "critical structural areas" are locations which have been identified from calculations to require monitoring or from the service history of similar or sister ships to be susceptible to cracking, buckling, deformation or corrosion which would impair the structural integrity of the ship. Each space for which close-up inspection is not required such as fuel oil tanks and void spaces forward of cargo area, may be provided with a means of access necessary for overall survey intended to report on the overall conditions of the hull structure.

3 Special attention is to be paid to the structural strength where any access opening is provided in the main deck or cross deck.

14.16.3.2 Definition

The definitions of the terms used in the requirements of **14.16.3** are as follows

(1) Rung means the step of a vertical ladder or step on a vertical surface.

(2) Tread means the step of an inclined ladder or step for a vertical access opening.

(3) Flight of an inclined ladder means the actual stringer length of an inclined ladder. For vertical ladders, it is the distance between

the platforms.

(4) Stringer means either:

(a) The frame of a ladder

(b) The stiffened horizontal plating structure fitted on the side shell, transverse bulkheads and/or longitudinal bulkheads in the space. For the purpose of ballast tanks of less than 5 *m* width forming double side spaces, the horizontal plating structure is credited as a stringer and a longitudinal permanent means of access, if it provides a continuous passage of 600 *mm* or more in width past frames or stiffeners on the side shell or longitudinal bulkhead. Openings in stringer plating utilized as permanent means of access are to be arranged with guard rails or grid covers to provide safe passage on the stringer or safe access to each transverse web.

(5) Vertical ladder means a ladder of which the inclined angle is 70 degrees and over up to 90 degrees. A vertical ladder is to not be skewed by more than 2 degrees.

(6) Overhead obstructions mean the deck or stringer structure including stiffeners above the means of access.

(7) Distance below deck head means the distance below the plating.

(8) Cross deck means the transverse area of the main deck which is located inboard and between hatch coamings.

(9) Cargo area means either:

(a) For oil tankers, area as defined in **2.1.35, Part A** of the Rules but excluding deck areas. However, spaces protecting oil fuel tank(*s*) in the machinery space as shown in **Fig. 14.16.3-1** need not be applicable to the requirements of **14.16.3**, even though they have a cruciform contact with the cargo oil tank or slop tank.

(b) For bulk carriers, cargo spaces and other spaces such as ballast tanks, cofferdams and void spaces within cargo spaces or adjacent to cargo spaces in the ship's transverse section

(10) The vertical distance between deck and horizontal stringer; horizontal stringers; deck or horizontal stringer and the bottom of the space; deck or horizontal stringer and platform; and platforms means the vertical distance between the upper surface of the lower deck, horizontal stringer or platform and the lower surface of the upper deck, horizontal stringer or platform

(11) The height of a space means the vertical distance between the top surface of the bottom plate of the space and the lower surface of the top plate of the space. In general, the height is to be measured from the lowest position to the highest position in each tank. However, for a space the height of which varies at different bays/sections, the requirements of **14.16.3.4** may be applied to such bays/sections of that space which fall under the criteria.

Fig. 14.16.3-1

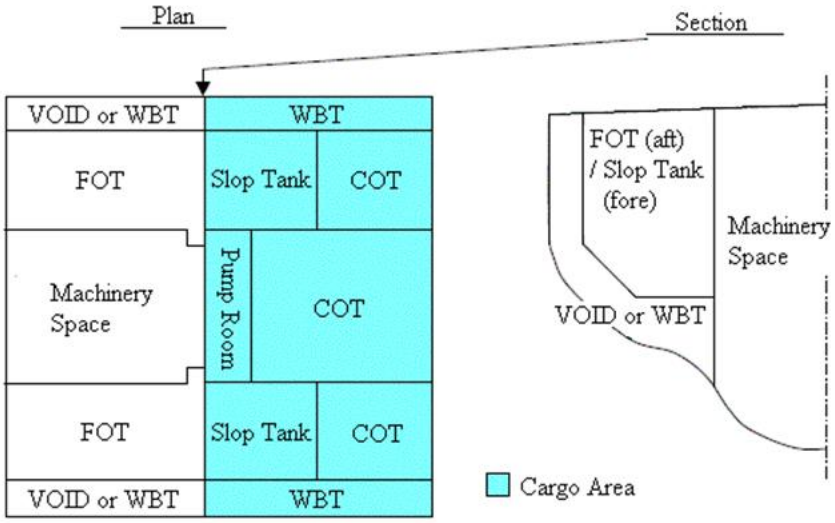

14.16.3.3 Means of Access to Spaces

1 Safe access to each space within the cargo area and fore peak tanks is to be direct from the open deck and in accordance with the following **(1)** to **(3)** corresponding to the kind of the space.

(1) Tanks, cofferdams and subdivisions of tanks and cofferdams, having a length of not less than 35 *m*, are to be fitted with at least

two access hatchways or manholes and ladders, as far apart as is practicable.

(2) Tanks and cofferdams less than 35 *m* in length are to be served by at least one access hatchway or manhole and ladder.

(3) Each cargo hold is to be fitted with at least two access hatchways or manholes and ladders that are as far apart as is practicable. In general, these accesses are to be arranged diagonally, for example one access near the forward bulkhead on the port side, the other one near the aft bulkhead on the starboard side. At least one of the two required ladders is to be of the inclined type except as specified in **-3** below.

2 Notwithstanding **-1** above, safe access to double bottom spaces, forward ballast tanks or lower spaces of sections divided vertically, may be from a pump-room, deep cofferdam, pipe tunnel, cargo hold, double hull space or similar compartment not intended for the carriage of oil or hazardous cargoes, subject to consideration of ventilation aspects.

3 The uppermost entrance section of the ladder providing access from the deck to a tank or cofferdam is to be vertical for not less than 2.5 *m*, but not in excess of 3.0 *m* measured clear of the overhead obstructions in way of the tank entrance, and be connected to a ladder linking platform which is to be displaced to one side of the vertical ladder. However, where there is a longitudinal or athwartship permanent means of access fitted within 1.6 *m* and 3 *m* below the deck head, the uppermost section of the ladder may stop at this means of access. The term "deck" means "weather deck".

4 For oil tankers, access ladders to cargo tanks and other spaces in the cargo area (excluding fore peak tanks) are to be in accordance with the following.

(1) Where two access hatchways or manholes and ladders are required as in **-1(1)** above, at least one ladder is to be of the inclining type. However, the uppermost entrance section of the ladder is to be vertical in accordance with the requirements of **-3** above.

(2) Where ladders not required to be of the inclined type as specified in **(1)** above, maybe of a vertical type. Where the vertical distance is more than 6 *m*, vertical ladders are to be connected by one or more ladder linking platforms, generally spaced not more than 6 *m* apart vertically and displaced to one side of the ladder. The uppermost entrance section of the ladder is to be in accordance with the requirements of **-4** above.

(3) Where one access hatchway or manhole and ladder is required as in **-1(2)** above, an inclined ladder is to be used in accordance with the requirements of **(1)** above.

(4) In spaces of less than 2.5 *m* width, access to the space may be made by means of vertical ladders that are connected to one or more ladder linking platforms generally spaced not more than 6 *m* apart vertically and displaced to one side of the ladder. Adjacent sections of ladder are to be laterally offset from each other by at least the width of the ladder. The uppermost entrance section of the ladder is to be in accordance with the requirements of **-3** above.

(5) Access from the deck to a double bottom space may be made by means of a vertical ladder through a trunk. The vertical distance from the deck to a resting platform, between resting platforms, or a resting platform and the tank bottom is generally not to be more than 6 *m* unless approved otherwise by the Society.

(6) Notwithstanding **(1)** to **(5)** above, where deemed necessary for aligning resting platform arrangements with hull structures, the vertical distance from the deck to a platform, between such platforms, or a platform and the tank bottom may be not more than 6.6 *m*.

5 For bulk carriers, access ladders to cargo holds and other spaces in the cargo area are to be in accordance with the following.

(1) Either a vertical ladder or an inclined ladder may be used where the vertical distance between the upper surface of adjacent decks or between the deck and the bottom of the cargo space is not more than 6 *m*.

(2) An inclined ladder or a series of inclined ladders at one end of the cargo hold is to be used where the vertical distance between the upper surface of adjacent decks or between the deck and the bottom of the cargo space is more than 6 *m*, except for the uppermost 2.5 *m* of the cargo space measured clear of overhead obstructions and the lowest 6 *m* may have vertical ladders, provided that the vertical extent of the inclined ladder or ladders connecting the vertical ladders is not less than 2.5 *m*.

(3) Means of access at the end of the cargo hold other than those specified in **(2)** above, may be formed by a series of staggered vertical ladders, which is to be connected to one or more ladder linking platforms spaced not more than 6 *m* apart vertically and displaced to one side of the ladder. Adjacent sections of ladder are to be laterally offset from each other by at least the width of the ladder. The uppermost entrance section of the ladder directly exposed to a cargo hold is to be vertical for a distance of 2.5 *m* measured clear of overhead obstructions and connected to a ladder-linking platform.

(4) A vertical ladder may be used as a means of access to topside tanks, where the vertical distance between the deck and the longitudinal means of access in the tank, the stringer, or the bottom of the space immediately below the entrance is not more

than 6 *m*. The uppermost entrance section of the ladder of the tank is to be vertical for a distance of 2.5 *m* measured clear of overhead obstructions and be connected to a ladder linking platform, unless the landing on the longitudinal means of access, the stringer, or the bottom is within 2.5 *m* and is displaced to one side of the vertical ladder.

(5) Unless specified in **(4)** above, an inclined ladder is to be used for access to a tank or space where the vertical distance is greater than 6 *m* between the deck and a stringer immediately below the entrance, between stringers, or between the deck or a stringer and the bottom of the space immediately below the entrance.

(6) In the case of **(5)** above, the uppermost entrance section of the ladder is to be vertical for a distance of 2.5 *m* clear of overhead obstructions and connected to a landing platform. Another ladder is to continue down from the platform. Inclined ladders are not to be more than 9 *m* in actual length and the vertical height is not normally to be more than 6 *m*. The lowermost section of the ladder may be vertical for a distance of 2.5 *m*.

(7) In double-side skin spaces of less than 2.5 *m* width, access to the space may be made by means of vertical ladders that connects to one or more ladder linking platforms spaced not more than 6 *m* apart vertically and displaced to one side of the ladder. Adjacent sections of ladder are to be laterally offset from each other by at least the width of the ladder.

(8) A spiral ladder may be considered acceptable as an alternative for inclined ladders. In this regard, the uppermost 2.5 *m* can continue to be comprised of the spiral ladder and need not change over to vertical ladders.

6 Staggered vertical ladders which is connected to one or more ladder linking platforms are to be in accordance with the following **(1)** to **(3)**. (*See* **Fig. 14.16.3-2**, **Fig. 14.16.3-3** and **Table 14.16.3-1**)

(1) The minimum "lateral offset" between two adjacent sections of a vertical ladder is the distance between the sections, upper and lower, so that the adjacent stringers are spaced at least 200 *mm* apart, measured from half thickness of each stringer.

(2) Adjacent sections of vertical ladder are to be installed so that the upper end of the lower section is vertically overlapped, in respect to the lower end of the upper section, to a height of 1,500 *mm* in order to permit a safe transfer between ladders. However, this requirement does not apply to cases where structural members (e.g. side stringers) are used to move between adjacent vertical ladders and are provided with safety measures such as handrails.

(3) No section of the access ladder is to be terminated directly or partly above an access opening.

Fig. 14.16.3-2 Vertical Ladder - Ladder Passing through Linking Platform

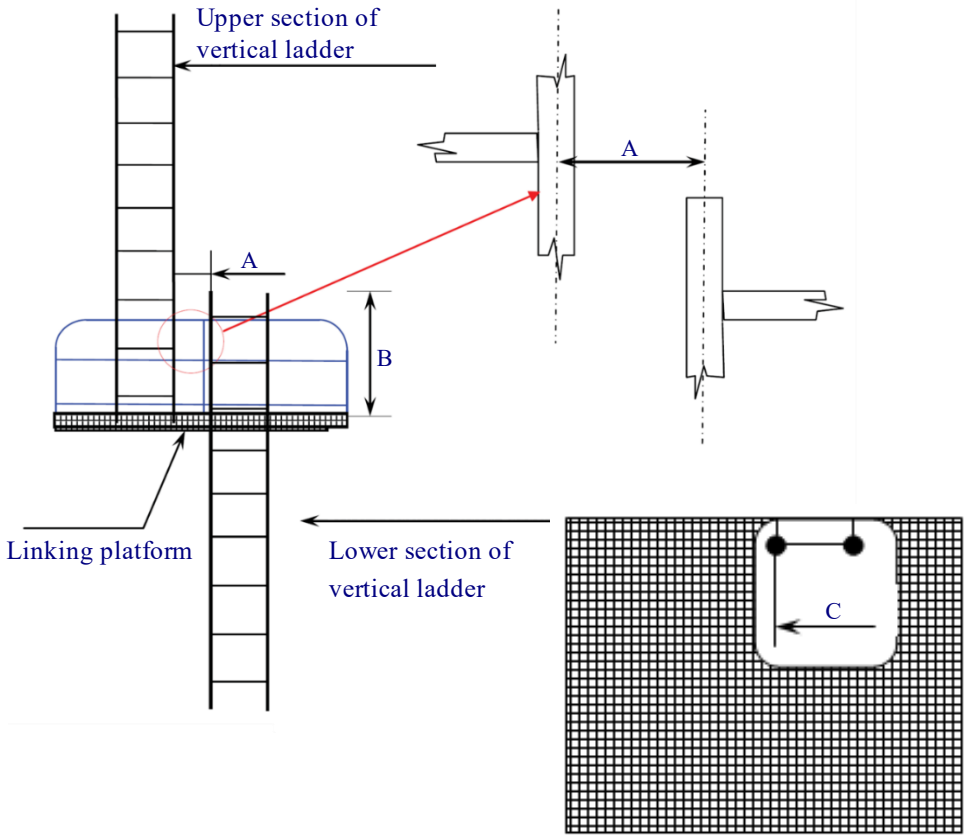

Fig. 14.16.3-3 Vertical Ladder - Side Mount

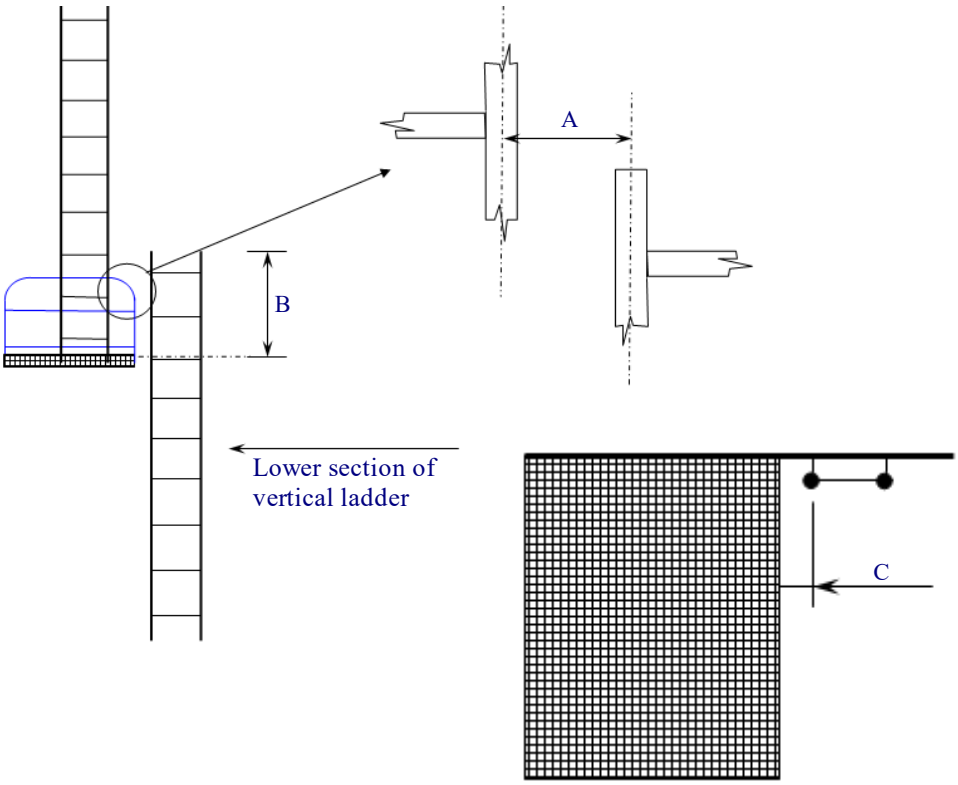

Table 14.16.3-1 Dimensions

A	Horizontal separation between two vertical ladders, stringer to stringer	≥ 200 *mm*
B	Stringer height above landing or intermediate platform	≥ 1,500 *mm**
C	Horizontal separation between ladder and platform	100 *mm*≤C< 300 *mm*
Note * : the minimum height of the handrail of resting platform is 1,000 *mm*		

14.16.3.4 Means of Access within Spaces

1 For oil tankers: cargo oil tanks and water ballast tanks except those specified in **-2** and **-8** are to be provided with means of access in accordance with the following **(1)** to **(4)**.

(1) For tanks of which the height is not less than 6 *m*, permanent means of access are to be provided in accordance with **(a)** to **(f)**. In the application of this requirements, the requirements of **(a)** to **(c)** define access to underdeck structures and the requirements of **(d)** to **(f)** define access to vertical structures. These requirements are linked to the presence of underdeck structures and transverse webs on longitudinal bulkheads. If there are no underdeck structures (deck longitudinals and deck transverses) but there are vertical structures in the cargo tank supporting transverse and longitudinal bulkheads (including brackets supporting deck transverses), in addition to access in accordance with applicable requirements of **(d)** to **(f)** access in accordance with the requirements of **(a)** to **(c)** is to be provided for inspection of the upper parts of vertical structure on transverse and longitudinal bulkheads. For example, there is need to provide continuous longitudinal permanent means of access in accordance with the requirements of **(b)** when the deck longitudinals and deck transverses are fitted on the deck but supporting brackets are fitted under the deck.

(a) A continuous athwartship permanent means of access is to be arranged at each transverse bulkhead on the stiffened surface, at a minimum of 1.6 *m* to a maximum of 3 *m* below the deck head.

(b) At least one continuous longitudinal permanent means of access is to be provided at each side of the tank. One of these accesses is to be at a minimum of 1.6 *m* to a maximum of 6 *m* below the deck head and the other is to be at a minimum of 1.6 *m* to a maximum of 3 *m* below the deck head.

(c) Access between the arrangements specified in **(a)** and **(b)** and from the main deck to either **(a)** or **(b)** is to be provided.

(d) A continuous longitudinal permanent means of access integrated into the structural members on the stiffened surface of a longitudinal bulkhead, in alignment, where possible, with horizontal girders of transverse bulkheads is to be provided for access to transverse webs from the upper deck and tank bottom unless permanent fittings are installed at the uppermost platform for use as an alternative means listed in **-10**, for inspection at intermediate heights. In addition, the following **i)** and **ii)** are to be taken into account.

i) For water ballast tanks of 5 *m* or more in width, such as on an ore carrier, side shell plating is to be considered in the same way as "longitudinal bulkhead".

ii) For the application of this **-1(1)(d)**, wire lift platforms or other means which can provide an equal level of safety as permanent means of access specified in **-10(2)**, are assumed as alternative means of access. However, rafting and permanent fittings for rafting are not permitted as alternatives to the continuous longitudinal permanent means of access.

(e) A transverse permanent means of access on the cross-ties providing access to the tie flaring brackets at both sides of the tank, with access from one of the longitudinal permanent means of access in **(d)** for ships having cross-ties which are not less than 6 *m* above the tank bottom.

(f) An alternative means listed in **-10** may be provided for small ships with cargo oil tanks less than 17 *m* in height as an alternative to **(d)**.

(2) For tanks less than 6 *m* in height, an alternative means listed in **-10** or portable means may be utilized in lieu of permanent means of access.

(3) Notwithstanding **(1)** and **(2)** above, tanks not containing internal structures need not to be provided with permanent means of access.

(4) Means of access deemed appropriate by the Society are to be provided for access to under deck structures, transverse webs and cross-ties outside the reach of permanent and/or portable means of access, as required in **(1)** and **(2)** above. The means of access generally presumes the use of boats which are to be comply with **-10(4)**.

2 For oil tankers: water ballast wing tanks of less than 5 *m* width forming double side spaces and their bilge hopper sections are to be provided with means of access in accordance with the following **(1)** to **(4)**. The requirements also apply to wing tanks designed as void spaces.

(1) For double side spaces above the upper knuckle point of the bilge hopper sections, permanent means of access are to be provided in accordance with **(a)** to **(e)**:

(a) Where the vertical distance between the uppermost horizontal stringer and the deck head is not less than 6 *m*, one continuous longitudinal permanent means of access is to be provided for the full length of the tank with a means to allow passing through transverse webs installed at a minimum of 1.6 *m* to a maximum of 3 *m* below the deck head with a vertical access ladder at each end of the tank. Means of access specified are to be connected to an access ladder from the deck required in **14.16.3.3-1**. Where two access hatches are required, access ladders at each end of the tank are to lead to the means of access.

(b) A continuous longitudinal permanent means of access integrated in the structure at a vertical distance not exceeding 6 *m* apart is to be provided.

(c) Plated stringers are, as far as possible, to be in alignment with horizontal girders of transverse bulkheads.

(d) Notwithstanding **(a)** and **(b)** above, the continuous permanent means of access may be a wide longitudinal, which provides access to critical details on the opposite side by means of platforms attached as necessary on the web frames. Where the vertical opening of the web frame is located in way of the open part between the wide longitudinal and the longitudinal on the opposite side, platforms are to be provided on both sides of the web frames to allow safe passage through the web frame.

(e) Notwithstanding **(a)** and **(b)** above, excess of not more than 10% may be accepted as a reasonable deviation, where deemed necessary for the integration of the permanent means of access with respect to the vertical distance of 6 *m* specified in **(a)** and **(b)** above.

(2) For bilge hopper sections of which the vertical distance from the tank bottom to the upper knuckle point is not less than 6 *m*, one longitudinal permanent means of access is to be provided for the full length of the tank in accordance with the following

(a) and **(b)**. It is to be accessible by a vertical permanent means of access at each end of the tank. Notwithstanding the requirements of **14.16.3.2(11)**, the height of a bilge hopper tank located outside of the parallel part of the ship may be taken as the maximum of the clear vertical distance measured from the bottom plating to the hopper plating of the tank.

(a) The longitudinal continuous permanent means of access may be installed at a minimum of 1.6 *m* to a maximum of 3 *m* from the top of the bilge hopper section. A platform extending from the longitudinal continuous permanent means of access in way of the web frame may be used to access the identified critical structural areas.

(b) Alternatively, the continuous longitudinal permanent means of access may be installed at a minimum of 1.2 *m* below the top of the clear opening of the web ring allowing the use of portable means of access to reach identified critical structural areas.

(3) Notwithstanding **(2)** above, in regards to the foremost and aftermost bilge hopper ballast tanks with raised bottoms, a combination of transverse and vertical means of access for access to the upper knuckle point for each transverse web may be accepted in place of the longitudinal permanent means of access.

(4) Where the vertical distance referred to in **(2)** is less than 6 *m*, alternative means listed in **-10** or portable means of access may be utilized in lieu of permanent means of access. To facilitate the operation of the alternative means of access, in-line openings in horizontal stringers are to be provided. The openings are to be of an adequate diameter and are to have suitable protective railings.

3 For bulk carriers, means of access to the overhead structure of the cross deck are to be fitted in accordance with the following **(1)** to **(5)**.

(1) Permanent means of access are to be fitted to provide access to the overhead structure at both sides of the cross deck and in the vicinity of the centreline. Each means of access is to be accessible from the cargo hold access or directly from the main deck and installed at a minimum of 1.6 *m* to a maximum of 3 *m* below the deck.

(2) An athwartship permanent means of access fitted on the transverse bulkhead at a minimum of 1.6 *m* to a maximum of 3 *m* below the cross deck head is deemed as equivalent to **(1)**.

(3) Access to the permanent means of access in **(1)** and **(2)** above may be via the upper stool.

(4) Ships having transverse bulkheads with full upper stools with access from the main deck which allows monitoring of all framing and plates from inside do not require permanent means of access of the cross deck.

(5) Alternatively, movable means of access may be utilized for access to the overhead structure of the cross deck if its vertical distance is not greater than 17 *m* above the tank top. The movable means of access need not necessarily be carried aboard the ship.

4 For cargo holds of bulk carriers, means of access are to be fitted in accordance with the following **(1)** to **(6)**.

(1) Permanent means of vertical access are to be provided in all cargo holds and built into the structure to allow for an inspection of a minimum of 25% of the total number of hold frames port and starboard equally distributed throughout the hold including at each end in way of transverse bulkheads. But in no circumstances is this arrangement to be less than 3 permanent means of vertical access fitted to each side (fore and aft ends of hold and mid-span). Permanent means of vertical access fitted between two adjacent hold frames is counted as access for the inspection of both hold frames. A portable means of access may be used to gain access over the sloping plating of lower hopper ballast tanks.

(2) In addition to **(1)**, portable or movable means of access are to be utilized for access to the remaining hold frames up to their upper brackets and transverse bulkheads.

(3) Portable or movable means of access may be utilized for access to hold frames up to their upper bracket in place of the permanent means required in **(1)**. These means of access are to be on board the ship and readily available for use. "Readily available" means capable of being transported to location in cargo hold and safely erected by ship's staff.

(4) The width of vertical ladders for access to hold frames is to be at least 300 *mm*, measured between stringers.

(5) A single vertical ladder over 6 *m* in length is acceptable for the inspection of the hold side frames in a single skin construction.

(6) For double-side skin construction no vertical ladder for the inspection of the cargo hold surfaces is required. Inspection of this structure is to be provided from within the double hull space.

5 For topside tanks of bulk carriers, means of access are to be fitted in accordance with the following **(1)** to **(4)**. Notwithstanding the requirements of **14.16.3.2(11)**, the height of a topside tank is to be the vertical distance measured at the ship's side.

(1) For each topside tank of not less than 6 *m* in height, one longitudinal continuous permanent means of access is to be provided

along the side shell webs and installed at a minimum of 1.6 *m* to a maximum of 3 *m* below deck with a vertical access ladder in the vicinity of each access to that tank.

(2) If no access holes are provided through the transverse webs within 600 *mm* of the tank base and the web frame rings have a web height greater than 1 *m* in way of side shell and sloping plating, then step rungs/grab rails are to be provided to allow safe access over each transverse web frame ring.

(3) Three permanent means of access, fitted at the end bay and middle bay of each tank, are to be provided spanning from tank base up to the intersection of the sloping plate with the hatch side girder. The existing longitudinal structure, if fitted on the sloping plate in the space may be used as part of this means of access.

(4) For topside tanks of which the height is less than 6 *m*, alternative means listed in **-10** or portable means may be utilized in lieu of the permanent means of access.

6 For bilge hopper tanks of bulk carriers, means of access are to be fitted in accordance with the following **(1)** to **(3)**. Notwithstanding the requirements of **14.16.3.2(11)**, the height of a bilge hopper tank located outside of the parallel part of the vessel may be taken as the maximum of the clear vertical height measured from the bottom plating to the hopper plating of the tank.

(1) For each bilge hopper tank of not less than 6 *m* in height, one longitudinal continuous permanent means of access is to be provided along the side shell webs and installed at a minimum of 1.2 *m* below the top of the clear opening of the web ring in accordance with **(a)** to **(c)**, with a vertical access ladder in the vicinity of each access to the tank.

(a) An access ladder between the longitudinal continuous permanent means of access and the bottom of the space are to be provided at each end of the tank.

(b) Alternatively, the longitudinal continuous permanent means of access can be located through the upper web plating above the clear opening of the web ring, at a minimum of 1.6 *m* below the top of the bilge hopper section, when this arrangement facilitates more suitable inspection of identified structurally critical areas. An enlarged longitudinal frame can be used for the purpose of the walkway. The foremost and aftermost bilge hopper ballast tanks with raised bottom, a combination of transverse and vertical means of access for access to the sloping plate of hopper tank connection with side shell plating for each transverse web can be accepted in place of the longitudinal permanent means of access.

(c) For double-side skin bulk carriers, the longitudinal continuous permanent means of access may be installed within 6 *m* from the knuckle point of the bilge, if used in combination with alternative methods to gain access to the knuckle point.

(2) If no access holes are provided through the transverse ring webs within 600 *mm* of the tank base and the web frame rings have a web height greater than 1 *m* in way of side shell and sloping plating, then step rungs/grab rails are to be provided to allow safe access over each transverse web frame ring. The height of web frame rings is to be measured in way of side shell and tank base.

(3) For bilge hopper tanks of less than 6 *m* in height, alternative means listed in **-10** or portable means may be utilized in lieu of the permanent means of access. That such means of access can be deployed and made readily available in the areas where needed is to be demonstrated.

7 For double-side skin tanks of bulk carriers, permanent means of access are to be provided in accordance with the requirements in **-1** or **-2** above, as applicable.

8 For fore peak tanks with a depth of not less than 6 *m* at the centreline of the collision bulkhead, suitable means of access are to be provided for access to critical areas such as the underdeck structure, stringers, collision bulkhead and side shell structure in accordance with the following **(1)** and **(2)**.

(1) Stringers of less than 6 *m* in vertical distance from the deck head or a stringer immediately above are considered to provide suitable access in combination with portable means of access.

(2) Where the vertical distance between the deck head and stringers, stringers or the lowest stringer and the tank bottom is not less than 6 *m*, alternative means of access listed in **-10** is to be provided.

9 Unless stated otherwise in **14.16.3.4**, vertical ladders that are fitted on vertical structures for inspection are to comprise of one or more ladder linking platforms spaced not more than 6 *m* apart vertically and displaced to one side of the ladder. Adjacent sections of ladder are to be laterally offset from each other by at least the width of the ladder. For the purpose of complying with the above, adjacent sections of ladders are to be in accordance with **14.16.3.3-6**.

10 Where the Administration and the ship's owner deems that a permanent means of access may be susceptible to damage during normal cargo loading and unloading operations or is impracticable to fit a permanent means of access, alternative means of access

deemed appropriate by the Administration and the ship's owner may be utilized in lieu of those specified in **-1** to **-8** above. In this case, the details of the alternative means of access are to be in accordance with the following **(1)** to **(4)**.

(1) The means of securing the alternative equipment are to be by means of the hull structure or a part permanently attached to it.

(2) Alternative means of access include, but are not limited to, such devices as:

(a) Hydraulic arm fitted with a stable base

(b) Wire lift platform

(c) Staging

(d) Rafting

(e) Robot arm or remotely operated vehicle (*ROV*)

(f) Portable ladders more than 5 *m* long are only to be utilized if fitted with a mechanical device to secure the upper end of the ladder. Where hooks for securing at the upper end of a ladder are provided as a mechanical device, such hooks are to be designed so that a movement fore/aft and sideways can be prevented at the upper end of the ladder

(g) Other means of access, approved by and acceptable to the Society

(3) With respect to the requirements of **(2)** above, the selection of an alternative means of access is to be based on the following conditions. Refer to **Annex 14.16 Guidance for Decision of Alternative Means of Access** for details.

(a) Such means provide accessibility and safety equivalent to permanent means

(b) Such means are suitable for use in an environment of the intended spaces

(c) Where the use of means such as *ROV* for the inspection of under deck structures, such means can be introduced into the space directly from a deck access

(d) Such means comply with or are based on appropriate safety standards

(e) Where the use of means other than those specified in **(2)(c)**, **(d)** or **(f)** above, such means are approved by the Administration and the ship's owner

(4) Where a boat is used as an alternative means, the following **(a)** to **(c)** is to apply.

(a) The requirements of **14.16.2.4-5**

(b) Rafts or boats alone may be allowed for survey of the under deck areas for tanks or spaces if the depth of the webs is not more than 1.5 *m*.

(c) Where the depth of the webs is more than 1.5 *m*, rafts or boats alone may be allowed only if permanent means of access are provided to allow safe entry and exit. This means either:

i) Access direct from the deck via a vertical ladder and small platform approximately 2 *m* below the deck in each bay

ii) Access to the deck from a longitudinal permanent platform having ladders to the deck at each end of the tank. The platform is to, for the full length of the tank, be arranged at or above the maximum water level needed for rafting of the under deck structure. For this purpose, the ullage corresponding to the maximum water level is to be assumed not more than 3 *m* from the deck plate measured at the midspan of the deck transverses and in the middle of the length of the tank. (*See* **Fig. 14.16.3-4**) A permanent means of access from the longitudinal permanent platform to the water level indicated above is to be fitted in each bay (e.g. permanent rungs on one of the deck webs inboard of the longitudinal permanent platform).

Fig. 14.16.3-4 Use of Rafts/Boats

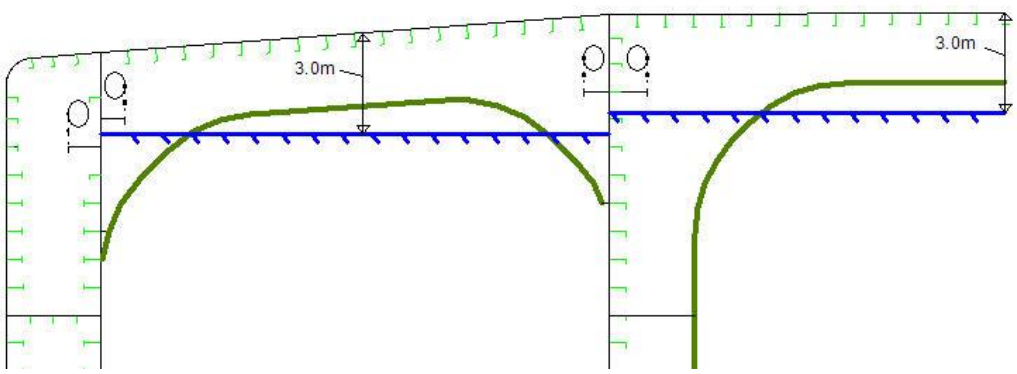

14.16.3.5 Specifications for Means of Access and Ladders

1 Permanent means of access are, in general, to be integral to the structure of the ship, thus ensuring that they are robust. Where deemed necessary by the Society for facilitating that such means of access are of integral parts of the structure itself, reasonable deviations from the requirements of the position of means of access in **14.16.3.3** and **14.16.3.4** may be accepted. Permanent means of access are to be designed so as to ensure sufficient residual strength during the service life of the ship and, in general, the initial corrosion protection which is the same as the hull structural members is to be applied.

2 Elevated passageways forming sections of a permanent means of access, where fitted, are to have a minimum clear width of 600 *mm*, except for going around vertical webs where the minimum clear width may be reduced to 450 *mm*.

3 Slopping structures are structures that are sloped by 5 or more degrees from the horizontal plane when a ship is in the upright position at even-keel. Sloping parts of the access are to be of non-skid construction. Non-skid construction is to be such that the surface on which personnel walk provides sufficient friction to the sole of boots even when the surface is wet and covered with thin sediment.

4 Elevated passageways forming sections of a permanent means of access, are to be provided with guard rails of 1,000 *mm* in height on the open side. The guard rails are to be of substantial construction and its details are to be in accordance with the following **(1)** to **(6)**.

(1) The guard rails are to consist of a rail and an intermediate bar 500 *mm* in height with stanchions not more than 3 *m* apart. Guardrail stanchions are to be attached to the permanent means of access.

(2) Where guard rails are divided into several parts, the gaps of discontinuous top handrail are not to exceed 50 *mm*. When the top and mid handrails are connected by a bent rail, the outside radius of the bent part is not to exceed 100 *mm* (*See* **Fig. 14.16.3-5**).

(3) The gaps between the top handrail and other structural members are not to exceed 50 *mm*.

(4) Where guard rails are divided into several parts, the maximum distance between the adjacent stanchions across the handrail gaps is to be 350 *mm*. However, when the top and mid handrails are connected together, the maximum distance may be 550 *mm* (*See* **Fig. 14.16.3-5**).

(5) The maximum distance between the stanchion and other structural members is not to exceed 200 *mm*. However, when the top and mid handrails are connected together, the maximum distance may be 300 *mm* (*See* **Fig. 14.16.3-5**).

(6) For guard rails use of alternative materials such as *GRP* is to be subject to compatibility with the liquid carried in the tank. Non-fire resistant materials are not to be used for means of access to a space with a view to securing an escape route at high temperatures.

Fig. 14.16.3-5 Detail of Handrails

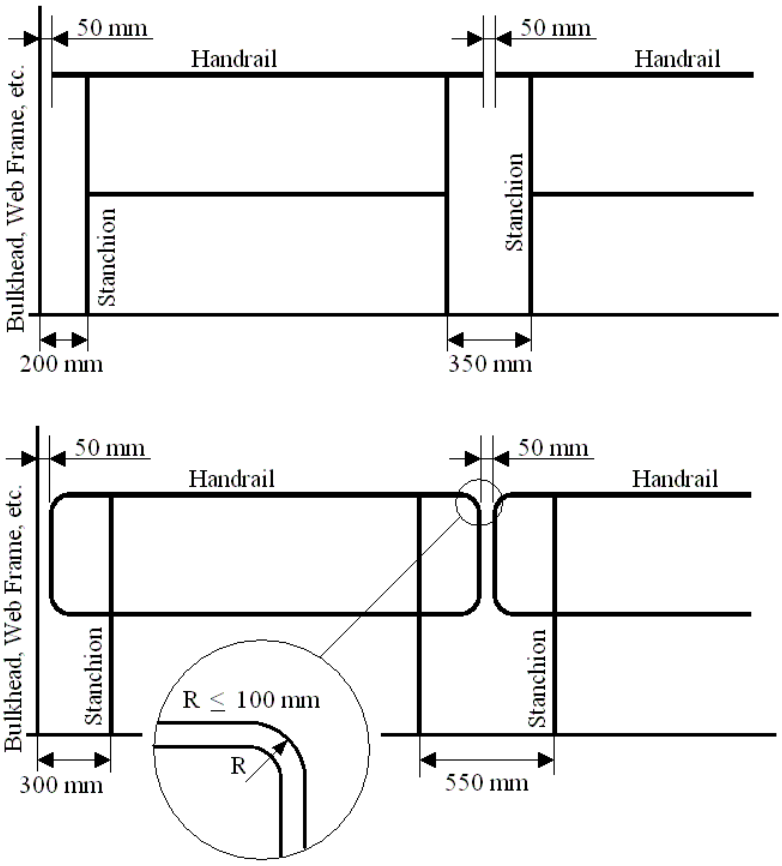

5 Access through horizontal openings, hatches or manholes is to be in accordance with the following **(1)** and **(2)**.

(1) The dimensions are to be sufficient to allow a person wearing a self-contained air-breathing apparatus and protective equipment to ascend or descend any ladder without obstruction and also provide a clear opening to facilitate the hoisting of an injured person from the bottom of the space. The minimum clear opening is not to be less than 600 *mm* × 600 *mm*. When access to a cargo hold is arranged through the cargo hatch, the top of the ladder is to be placed as close as possible to the hatch coaming. Access hatch coamings having a height greater than 900 *mm* are also to have steps on the outside in conjunction with the ladder.

(2) The minimum clear opening of 600 *mm* × 600 *mm* is to be rounded appropriately and may have corner radii up to 100 *mm* maximum. Where larger corner radii are adopted for avoiding stress concentration, a larger opening is to be provided so as to ensure accessibility equivalent to a opening of 600 *mm* × 600 *mm*. For example, 600 *mm* × 800 *mm* with 300 *mm* of corner radii may be accepted.

6 For openings or manholes on vertical surfaces, the followings **(1)** and **(2)** are to apply.

(1) For access through vertical openings, or manholes, in swash bulkheads, floors, girders and web frames providing passage through the length and breadth of the space, the minimum opening is not to be less than 600 *mm* × 800 *mm* at a height of not more than 600 *mm* from the bottom shell plating unless gratings or other foot holds are provided.

(2) The minimum clear opening of 600 *mm* × 800 *mm* is to be rounded appropriately and may have corner radii up to 300 *mm* maximum. Such openings, in general, are to be 800 *mm* in height. However, an opening of 600 *mm* in height and 800 *mm* in width may be accepted as access openings in vertical structures where it is not desirable to make large openings in the structural strength aspects.

7 Notwithstanding **-6** above, the following dimensions of access openings may be accepted subject to verification of easy evacuation of an injured person on a stretcher.

(1) The vertical manhole is at a height of more than 600 *mm* above the bottom plate.

(2) Access openings having other dimensions, i.e. an opening as shown in **Fig. 14.16.3-6**, may be accepted.

Fig. 14.16.3-6 Example of Vertical Opening

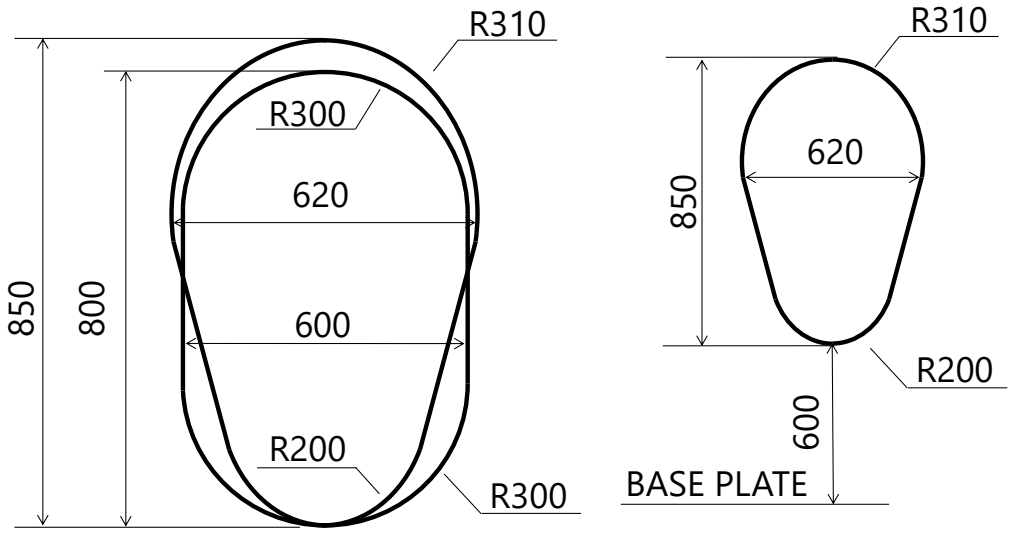

8 For oil tankers of less than 5,000 *tonnes deadweight*, smaller dimensions for the openings referred to in **-5** and **-6** may be approved by the Society in special circumstances, if the ability to traverse such openings or to remove an injured person can be proved to the satisfaction of the Society. The smaller dimensions of minimum clear opening are to be in accordance with **Table S3.4.4, Part S of the Guidance**.

9 Access to permanent means of access and vertical openings from the ship's bottom is to be provided by means of easily accessible passageways, ladders or treads. Treads are to be provided with lateral support for the foot. Where the rungs of ladders are fitted against a vertical surface, the distance from the centre of the rungs to the surface is to be at least 150 *mm*. Where vertical manholes are fitted higher than 600 *mm* above the walking level, access is to be facilitated by means of treads and hand grips with platform landings on both sides. It is to be demonstrated that an injured person can be easily evacuated.

10 For ladders or similar facilities forming sections of a permanent means of access, their specifications are to be in accordance with the following **(1)** to **(7)**.

(1) Permanent inclined ladders are to be inclined at an angle of less than 70 degrees. There is to be no obstructions within 750 *mm* of the face of the inclined ladder, except that in way of an opening this clearance may be reduced to 600 *mm*. Such clearance is to be measured perpendicular to the face of the ladder. A minimum climbing clearance in width is to be 600 *mm*. For this purpose, handrails may be provided within such climbing clearance. Resting platforms of adequate dimensions are to be provided, normally at a maximum of 6 *m* vertical height. Where deemed necessary for aligning resting platform arrangements with hull structures, the vertical distance from deck to such platforms, between such platforms or such platforms and the tank bottom may be not more than 6.6 *m*. In this case, the flights of inclined ladders are not to be more than 9 *m* in actual length. Ladders and handrails are to be constructed of steel or equivalent material of adequate strength and stiffness and securely attached to the structure by stays. The method of support and length of stay is to be such that vibration is reduced to a practical minimum. In cargo holds, ladders are to be designed and arranged so that cargo handling difficulties are not increased and the risk of damage from cargo handling gear is minimized.

(2) The width of inclined ladders between stringers is not to be less than 400 *mm*. The width of inclined ladders for access to a cargo hold in bulk carriers is to be at least 450 *mm*. The treads are to be equally spaced at a distance apart, measured vertically, of between 200 *mm* and 300 *mm*. When steel is used, the treads are to be formed of two square bars of not less than 22 *mm* × 22 *mm* in section, fitted to form a horizontal step with the edges pointing upward. The treads are to be carried through the side stringers and attached thereto by double continuous welding. All inclined ladders are to be provided with handrails of substantial construction on both sides. The vertical height of handrails is not to be less than 890 *mm* from the centre of the step and two course handrails is to be provided where the gap between stringer and top handrail is greater than 500 *mm*.

(3) For vertical ladders, the width and construction are to be in accordance with the following. Other details are to be in accordance with international or national standards accepted by the Society.

(a) The minimum width of vertical ladders, except those specified in **14.16.3.4-4(4), Part C** of the Rules, is to be 350 *mm*.

(b) The vertical distance between the rungs is to be equal and is to be between 250 *mm* and 350 *mm*.

(c) When steel is used, the rungs are to be formed of single square bars of not less than 22 *mm* × 22 *mm* in section, fitted to form a horizontal step with the edges pointing upward.

(d) Vertical ladders are to be secured at intervals not exceeding 2.5 *m* apart to prevent vibration.

(e) A minimum climbing clearance in width is to be 600 *mm* other than the ladders placed between the hold frames. A clearance of 600 *mm* perpendicular to the ladder is to be kept as far as possible.

(4) For spiral ladders, the width and construction are to be in accordance with international or national standards accepted by the Society.

(5) Resting platforms placed between ladders are to follow the requirements of **14.16.3.5-1** to **-4**.

(6) Portable ladders are to be in accordance with or are based on appropriate safety standards. No free-standing portable ladder is to be more than 5 *m* long unless accepted by the requirements of **14.16.3.4-10(2)(f)**.

(7) It is to be demonstrated that portable means for inspection can be deployed and made readily available in the areas where needed.

(8) For the selection of portable and movable means of access, refer to **Annex 14.16 "GUIDANCE FOR DECISION OF ALTERNATIVE MEANS OF ACCESS"**.

14.16.3.6 Ship Structure Access Manual

1 For every ship, means of access to carry out overall and close-up inspections and thickness measurements are to be described in a Ship Structure Access Manual approved by the Society, and any change of the contents of which is to be updated and an updated copy of which is to be kept on board. The Ship Structure Access Manual is to include the following for each space.

(1) Plans showing the means of access to the space, with appropriate technical specifications and dimensions

(2) Plans showing the means of access within each space to enable an overall inspection to be carried out, with appropriate technical specifications and dimensions (the plans are to indicate from where each area in the space can be inspected)

(3) Plans showing the means of access within the space to enable close-up inspections to be carried out, with appropriate technical specifications and dimensions (the plans are to indicate the positions of critical structural areas, whether the means of access is permanent or portable and from where each area can be inspected) "Critical structural areas" are to be in accordance with the requirements of **14.16.3.1-2**.

(4) Instructions for inspecting and maintaining the structural strength of all means of access and means of attachment, taking into account any corrosive atmosphere that may exist within the space

(5) Safety instructions for when rafting is used for close-up inspections and thickness measurements

(6) Instructions for the rigging and use of any portable means of access in a safe manner

(7) An inventory of all portable means of access

(8) Records of periodical inspections and maintenance of the ship's means of access

2 The Ship Structure Access Manual required in **-1** above, of the Rules is to contain at least the following two parts.

(1) Part I

It is to be include the contents specified in **-1(1)** to **(7)** above, and the following items are to be clearly indicated.

(a) Approval/re-approval procedure for the manual, i.e. any changes of the permanent, portable, movable or alternative means of access within the scope of **14.16.3** of the Rules are subject to review and approval by the Society.

(b) Verification of means of access is to be part of a survey for continued effectiveness of the means of access in that space which is subject to the survey.

(c) Inspection of means of access is to be carried out by the crew and/or a competent inspector of the company as a part of regular inspection and maintenance.

(d) Actions to be taken if means of access are found unsafe to use.

(e) In case of use of portable equipment, plans showing the means of access within each space indicating from where and how each area in the space can be inspected.

(2) Part II

This part is to comprise of forms for record of inspections and maintenance, and change of inventory of portable equipment due to additions or replacements after construction specified with **-1(8)** above. The form in this part is approved by the Society when the ship is under survey for classification during construction.

3 The Ship Structure Access Manual required to be prepared in a language(s) which all the crew can understand. As a minimum

the English version is to be provided.

4 Where alternative means of access are adapted in accordance with the requirements of **14.16.3.3**, a means for safe operation and rigging of such alternative means to and from and within the spaces are to be clearly described in the Ship Structure Access Manual.

Annex14.6 BUCKLING STRENGTH ASSESSMENT OF SHIP STRUCTURAL ELEMENTS

An1. Application and Definitions

Symbols

EPP : Elementary Plate Panel, as specified in **An1.2.3.1**

PSM : Primary Supporting Member

SP : Stiffened Panel, as specified in **An1.2.3.3**

UP : Unstiffened Panel, as specified in **An1.2.3.3**

An1.1 Application

An1.1.1 General

An1.1.1.1

This annex specifies a general buckling assessment procedure and is to be applied in conjunction with relevant requirements.

An1.1.2 Overview

An1.1.2.1

The buckling checks are to be performed according to

An1.: General definitions regarding buckling capacity, allowable buckling utilisation factors and buckling check criteria.

An2.: The slenderness requirements of longitudinal and transverse stiffeners.

An3.: The prescriptive buckling requirements of plates, longitudinal and transverse stiffeners, primary supporting members and other structures subject to hull girder stresses.

An4.: Direct strength analysis (usually by finite element method) buckling requirements of hatch cover structural members including plates, stiffeners and primary supporting members.

An5.: The determination of buckling capacities of plate panels, stiffeners, primary supporting members and column structures.

An1.1.2.2 Buckling Assessment

For the buckling assessment of a ship hull girder, a hatch cover or some structural component, the slenderness requirements as specified in **An2.**, and the buckling requirements as specified in **An3.** or **An4.** are to be checked as per the requirements of the applicable relevant requirements.

An1.1.2.3 Alternative Methods

This annex contains the general methods for the determination of buckling capacities of plate panels, stiffeners, primary supporting members, and columns. For special cases not covered in this annex, such as a whole plate structure with stiffeners in two directions (i.e. a stiffened panel with both primary and secondary stiffeners), other more advanced methods, such as finite element analysis methods, can be used as deemed appropriate by the Society.

An1.2 Terms and Assumptions

An1.2.1 Buckling

An1.2.1.1 Buckling Strength

Buckling strength or capacity refers to the strength of a structure under in-plane compressions and/or shear and lateral load. Buckling strength with consideration of the buckling behavior in **An1.2.1.2** gives a lower bound estimate of ultimate capacity, or the maximum load a structural member can carry without suffering major permanent set.

For each structural member, its buckling strength is to be taken as corresponding to the most unfavourable or critical buckling mode.

An1.2.1.2 Buckling Behaviour

Buckling strength assessment takes into account both elastic buckling and post-buckling behaviours. Post-buckling can consider the internal redistribution of loads depending on the load situation, slenderness and type of structure. Such as for the buckling assessment of plates, generally its positive elastic post-buckling effect can be utilised.

As such, for slender structures, the calculated buckling strength is typically higher than the ideal elastic buckling stress (minimum

eigenvalue). Accepting elastic buckling of slender plate panels implies that large elastic deflections and reduced in-plane stiffness may occur at higher buckling utilisation levels.

An1.2.2 Net Scantling Approach

An1.2.2.1 General

Unless otherwise specified, all the scantling requirements, including slenderness requirements, in this annex are based on net scantlings obtained by removing full corrosion addition t_c from the gross offered thicknesses.

An1.2.2.2 Corrosion Addition

Corrosion addition t_c referred in this annex is defined in the relevant requirements.

An1.2.2.3 Stress Calculation Models

The structural models used for the calculation of stresses to be applied for buckling assessment, which are usually based on net scantlings, are defined in the relevant requirements.

An1.2.3 Structural Idealisation

An1.2.3.1 Elementary Plate Panel

An elementary plate panel (*EPP*) is the unstiffened part of the plating between stiffeners and/or primary supporting members. The plate panel length, a, and breadth, b, of the *EPP* are defined respectively as the longest and shortest plate edges, as shown in **Fig. An1**.

An1.2.3.2 Standard Types of Stiffeners

Definitions of the cross-sectional dimensions of typical stiffener types are shown in **Fig. An2**, which are flat bars, bulb flats, angles, L2 and T bars. If applicable, other types of stiffeners can be idealised to one of the typical types in **Fig. An2** for buckling check. For the U-type stiffener which is usually fitted in some hatch covers, the definition of its cross-sectional dimensions is shown in **Fig. An3**.

Unless otherwise specified, the full span or full length ℓ (mm) of a stiffener is to be used for buckling check, which equals to the spacing between primary supporting members.

Symbolic dimensions of the cross-sections are as below:

b_1 : Width (mm) of the attached plate enclosed by the U-type stiffener, as shown in **Fig. An3**.

b_2: Width (mm) of the attached plate between adjacent U-type stiffeners, as shown in **Fig. An3**.

b_f : Width (mm) of the flange or face plate of the stiffener, as shown in **Fig. An2** and **Fig. An3**.

b_{f-out}: Maximum distance (mm) from mid thickness (mm) of the web to the flange edge, as shown in **Fig. An2**.

d_f: Breadth (mm) of the extended part of the flange for L2 profiles, as shown in **Fig. An2**.

e_f: Distance (mm) from attached plating to centre of flange, as shown in **Fig. An2**. For its detailed definition, refer to **An5. Symbols**.

h_w: Depth (mm) of stiffener web, as shown in **Fig. An2** and **Fig. An3**.

t_f: Net flange thickness (mm).

t_p: Net thickness of plate (mm).

t_w: Net web thickness (mm).

An1.2.3.3 Stiffened Panel (SP) and Unstiffened Panel (UP)

For a panel with relatively strong interactive effect between the stiffener and its attached plate, each stiffener with its attached plate as a whole is to be modelled as a stiffened panel (*SP*), so as to be able to consider both of its local and global buckling modes.

However, for an *EPP*, if its buckling strength can be checked without considering its interactive effect with stiffeners fitted along its edges, it's to be modelled as an unstiffened panel (*UP*).

Fig. An1 Elementary Plate Panel (*EPP*) Definition

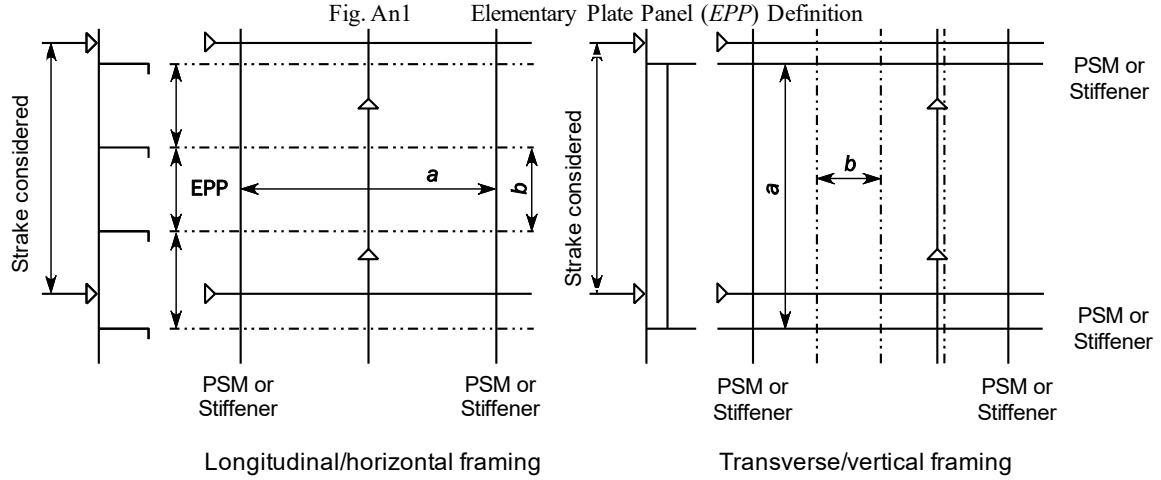

Fig. An2 Dimensions of Typical Stiffener Cross Sections

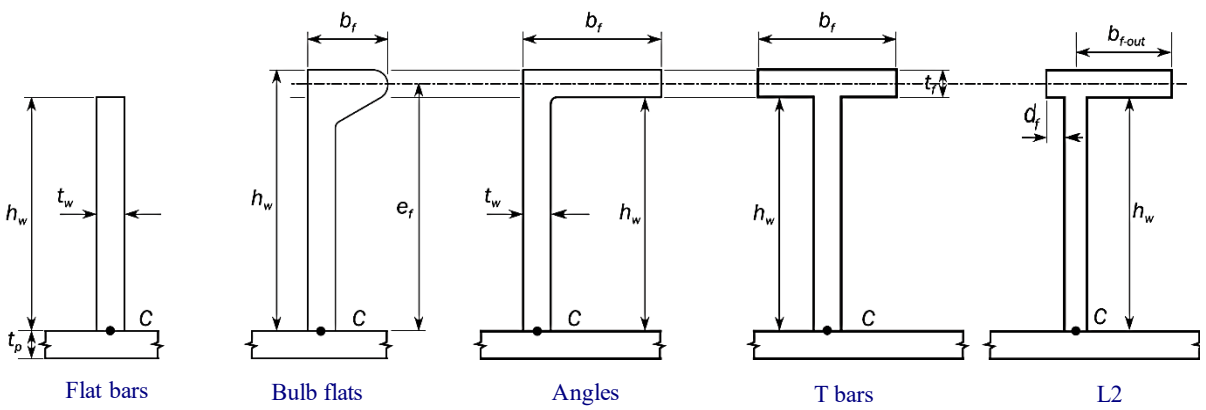

Fig. An3 Dimensions of a U-type Stiffener Cross Section

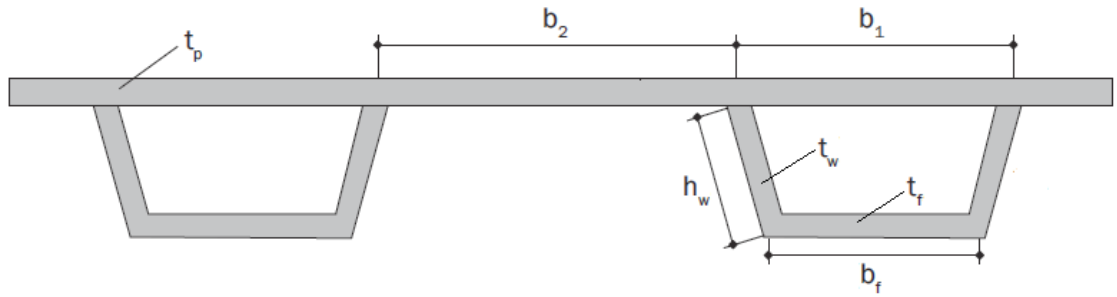

An1.2.4 Sign Convention

An1.2.4.1 Stresses

In this annex, compressive and shear stresses are to be taken as positive, tension stresses are to be taken as negative.

An1.3 Assessment Methods and Acceptance Criteria

An1.3.1 Assessment Methods

An1.3.1.1 Method A and Method B

The buckling assessment is to be carried out according to one of the following two methods taking into account different boundary condition types:

- Method A: All the edges of the *EPP* are forced to remain straight (but free to move in the in-plane directions) due to the surrounding structure/neighbouring plates.

- Method B: The edges of the *EPP* are not forced to remain straight due to low in-plane stiffness at the edges and/or no surrounding structure/neighbouring plates.

An1.3.1.2 SP-A, SP-B, UP-A and UP-B Models

For the buckling assessment of the stiffened panel (*SP*) and unstiffened panel (*UP*) structural models defined in **An1.2.3.3**, with application of either Method A or Method B for the plate buckling assessment, the following four buckling assessment models are established:

- SP-A: a stiffened panel with application of Method A
- SP-B: a stiffened panel with application of Method B
- UP-A: an unstiffened panel with application of Method A
- UP-B: an unstiffened panel with application of Method B

An1.3.2 Buckling Utilisation Factor

An1.3.2.1

The utilisation factor, η, is defined as the ratio between the applied loads and the corresponding buckling capacity.

An1.3.2.2

For combined loads, the utilisation factor, η_{act}, is to be defined as the ratio of the applied equivalent stress and the corresponding buckling capacity, as shown in **Fig. An4**, and is to be taken as:

$$\eta_{act} = \frac{W_{act}}{W_U} = \frac{1}{\gamma_c}$$

Where:

W_{act} : Equivalent applied stress. The actual applied stresses are given in **An3.** and **An4.** respectively for buckling assessment by prescriptive and direct strength analysis.

W_u : Equivalent buckling capacity. For plates and stiffeners, their respective buckling or ultimate capacities are given in **An5.**.

γ_c: Stress multiplier factor at failure.

For each typical failure mode, the corresponding buckling capacity of the panel is calculated by applying the actual stress combination and then increasing or decreasing the stresses proportionally until collapse occurs, i.e. when the increased or decreased stresses are on a buckling strength interaction curve or surface.

Fig. An4 illustrates the buckling capacity and the buckling utilisation factor of a structural member subject to σ_x and σ_y stresses.

Fig. An4 Example of Buckling Capacity and Buckling Utilisation Factor

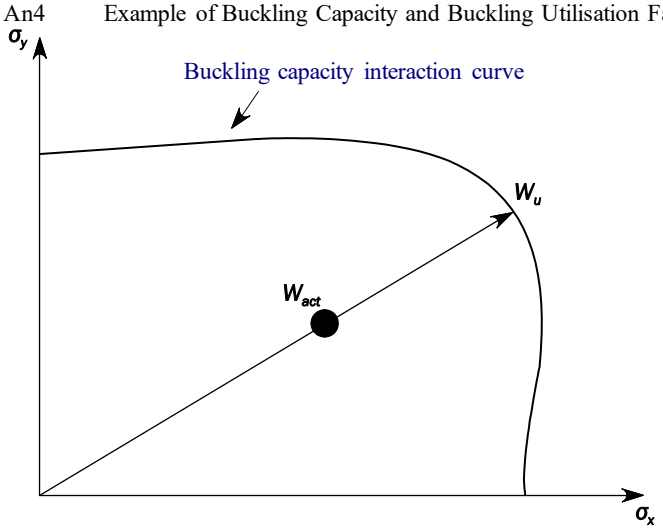

An1.3.3 Allowable Buckling Utilisation Factor

An1.3.3.1

The allowable buckling utilisation factor η_{all} is to be taken according to the relevant requirements.

An1.3.4 Buckling Acceptance Criteria

An1.3.4.1

A structural member is considered to have an acceptable buckling strength if it satisfies the following criterion:

$\eta_{act} \leq \eta_{all}$

Where:

η_{act}: Buckling utilisation factor based on the applied stress, defined in **An1.3.2.2**.

η_{all}: Allowable buckling utilisation factor as defined in **An1.3.3.1**.

An2. Slenderness Requirements

Symbols

For symbols not defined in this section, refer to **An1.2.3.2**.

σ_Y: Specified minimum yield stress (N/mm^2) of the structural member being considered

An2.1 General

An2.1.1 Introduction

An2.1.1.1

The stiffener elements except for U-type stiffeners are to comply with the applicable slenderness and proportion requirements given in **An2.**.

An2.2 Stiffeners

An2.2.1 Proportions of Stiffeners

An2.2.1.1 Net Thickness of All Stiffener Types

The net thickness of stiffeners is to satisfy the following criteria:

(a) Stiffener web plate:

$$t_w \geq \frac{h_w}{C_w}\sqrt{\frac{\sigma_Y}{235}}$$

(b) Flange:

$$t_f \geq \frac{b_{f-out}}{C_f}\sqrt{\frac{\sigma_Y}{235}}$$

C_w, C_f: Slenderness coefficients given in **Table An1**

If requirement **(b)** is not fulfilled, the effective free flange outstand (mm) used in strength assessment including the calculation of actual net section modulus, is to be taken as:

$$b_{f-out-max} = C_f t_f \sqrt{\frac{235}{\sigma_Y}}$$

An2.2.1.2 Net Dimensions of Angle and T-Bars

The total flange breadth b_f (mm) for angle and T-bars is to satisfy the following criterion:

$$b_f \geq 0.2h_w$$

Table An1 Slenderness Coefficients

Type of Stiffener	C_w	C_f
Angle and L2 bars	75	12
T-bars	75	12
Bulb flats	45	-
Flat bars	22	-

For built-up profile where the relevant yielding strength for the web of built-up profile without the edge stiffener is acceptable, as an alternative the web can be assessed according to the web requirements of Angle and L2 bars in **Table An1**, and the edge stiffener can be assessed as a flat bar stiffener according to **An2.2.1.1**. The requirement to flange in **An2.2.1.2** is to apply.

An2.3 Primary Supporting Members

An2.3.1 Proportions and Stiffness

An2.3.1.1 Proportions of Web Plate and Flange

The scantlings of webs and flanges of primary supporting members are to comply with the relevant requirements.

An3. Buckling Requirements for Hull Girder

Symbols

η_{all}: Allowable buckling utilisation factor, as defined in **An1.3.3.1**

LCP: Load Calculation Point as defined in **An3.1.2.1**

An3.1 General

An3.1.1 Introduction

An3.1.1.1

This section applies to plate panels including plane and curved plate panels, stiffeners and corrugation of longitudinal corrugated bulkheads subject to hull girder compression and shear stresses.

An3.1.1.2

The ship longitudinal extent where the buckling check is performed for structural elements subject to hull girder stresses is to be in accordance with the relevant requirements.

An3.1.1.3 Design Load Sets

The buckling check is to be performed for all design load sets corresponding to the design loading conditions defined in the relevant requirements with most unfavourable pressure combinations.

For each design load set, for all static and dynamic load cases, the lateral pressure is to be determined at the load calculation point defined in **An3.1.2.1**, and is to be applied together with the hull girder stress combinations defined in the relevant requirements.

An3.1.2 Definitions

An3.1.2.1 Load Calculation Point

The load calculation points (*LCP*) for both elementary plate panels (*EPP*) and stiffeners are defined as follows:

(a) *LCP* for hull girder stresses of *EPP*

The hull girder stresses for *EPP* are to be calculated at the load calculation points defined in **Table An2**.

(b) *LCP* for hull girder stresses of longitudinal stiffeners

The hull girder stresses for longitudinal stiffeners are to be calculated at the following load calculation point:

- at the mid length of the considered stiffener
- at the intersection point between the stiffener and its attached plate

(c) *LCP* for pressure of horizontal stiffeners

The load calculation point for the pressure is located at:

- Middle of the full length, ℓ, of the considered stiffener
- The intersection point between the stiffener and its attached plate

(d) *LCP* for pressure of non-horizontal stiffeners

The lateral pressure, *P* is to be calculated as the maximum between the value obtained at middle of the full length, ℓ, and the value obtained from the following formulae:

$P = \frac{p_U + p_L}{2}$ when the upper end of the vertical stiffener is below the lowest zero pressure level.

$P = \frac{\ell_1}{\ell}\frac{p_L}{2}$ when the upper end of the vertical stiffener is at or above the lowest zero pressure level, see **Fig. An6**.

Where:

ℓ_1: Distance (m) between the lower end of vertical stiffener and the lowest zero pressure level.

p_U, p_L: Lateral pressures at the upper and lower end of the vertical stiffener span ℓ, respectively.

Table An2 Load Calculation Points (*LCP*) Coordinates for Plate Buckling Assessment

LCP coordinates	Hull girder bending stress		Hull girder shear stress
	Non horizontal plating	Horizontal plating	
x coordinate	Mid-length of the *EPP*		
y coordinate	Both upper and lower ends of the *EPP* (points *A*1 and *A*2 in **Fig. An5**)	Outboard and inboard ends of the *EPP* (points *A*1 and *A*2 in **Fig. An5**)	Mid-point of *EPP* (point *B* in **Fig. An5**)
z coordinate	Corresponding to *x* and *y* values		

Fig. An5 *LCP* for Plate Buckling Assessment

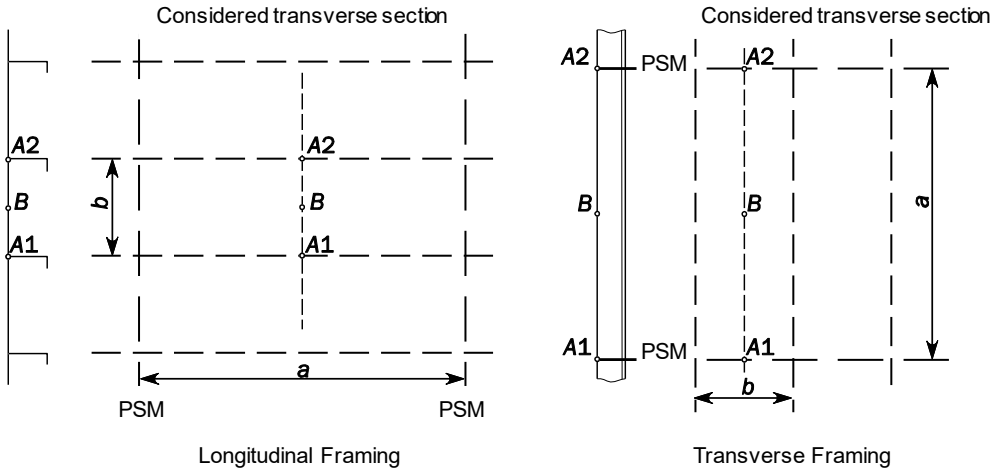

Fig. An6 Definition of Pressure for Vertical Stiffeners

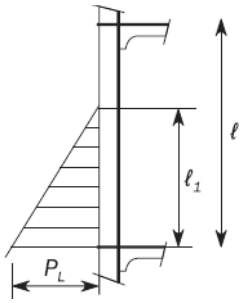

An3.1.3 Assumptions for Equivalent Plate Panels

An3.1.3.1 Longitudinal Stiffening with Varying Plate Thickness

In longitudinal stiffening arrangement, when the plate thickness varies over the width b, of a plate panel, the buckling check is to be performed for an equivalent plate panel width, combined with the smaller plate thickness, t_1. The width (mm) of this equivalent plate panel, b_{eq} is defined by the following formula:

$$b_{eq} = \ell_1 + \ell_2 \left(\frac{t_1}{t_2}\right)^{1.5}$$

Where:

ℓ_1 : Width of the part of the plate panel with the smaller plate thickness, t_1 (mm) as defined in **Fig. An7**.

ℓ_2 : Width of the part of the plate panel with the greater plate thickness, t_2 (mm) as defined in **Fig. An7**.

An3.1.3.2 Transverse Stiffening with Varying Plate Thickness

In transverse stiffening arrangement, when an *EPP* is made with different thicknesses, the buckling check of the plate and stiffeners is to be made for each thickness considered constant on the *EPP*, the stresses and pressures being estimated for the *EPP* at the *LCP*.

An3.1.3.3 Plate Panel with Different Materials

When the plate panel is made of different materials, the minimum yield strength is to be used for the buckling assessment.

Fig. An7 Plate Thickness Change Over the Width

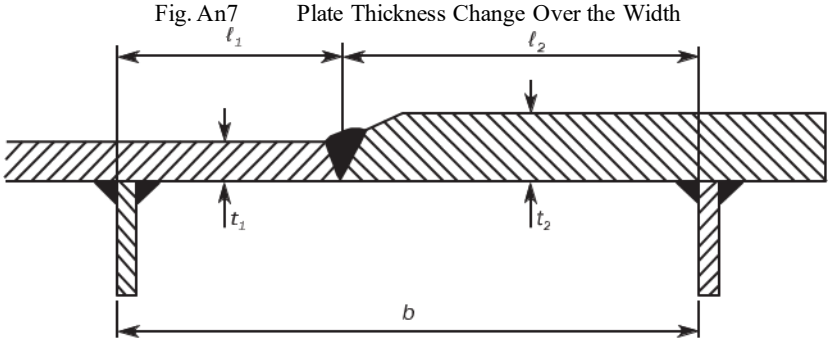

An3.2 Buckling Criteria

An3.2.1 Overall Stiffened Panel

An3.2.1.1

The buckling strength of overall stiffened panels is to satisfy the following criterion:

$\eta_{overall} \leq \eta_{all}$

$\eta_{overall}$: Maximum overall buckling utilisation factor as defined **An5.2.1**.

An3.2.2 Plates

An3.2.2.1

The buckling strength of elementary plate panels is to satisfy the following criterion:

$\eta_{plate} \leq \eta_{all}$

Where:

η_{plate}: Maximum plate buckling utilisation factor as defined in **An5.2.2** where SP-A model is to be used.

For the determination of η_{plate} of the vertically stiffened side shell plating of single side skin bulk carrier between hopper and topside tanks, the cases 12 and 16 of Sec 5, **Table An5** corresponding to the shorter edge of the plate panel clamped are to be considered together with a mean σ_y stress and $\psi_y = 1$.

An3.2.3 Stiffeners

An3.2.3.1

The buckling strength of stiffeners or of side frames of single side skin bulk carriers is to satisfy the following criterion:

$\eta_{stiffener} \leq \eta_{all}$

Where:

$\eta_{stiffener}$: Maximum stiffener buckling utilisation factor as defined in **An5.2.3**.

Note 1: This buckling check can only be fulfilled when the overall stiffened panel buckling check, as defined in **An3.2.1**, is satisfied.

Note 2: The buckling check of the stiffeners is only applicable to the stiffeners fitted along the long edge of the buckling panel.

An3.2.4 Vertically Corrugated Longitudinal Bulkheads

An3.2.4.1

The shear buckling strength of vertically corrugated longitudinal bulkheads is to satisfy the following criterion:

$\eta_{shear} \leq \eta_{all}$

η_{shear}: Maximum shear buckling utilisation factor defined as

$$\eta_{shear} = \frac{\tau_{bhd}}{\tau_c}$$

τ_{bhd}: Shear stress (N/mm^2) in the bulkhead taken as the hull girder shear stress defined in the relevant requirements.

τ_c: Shear critical stress (N/mm^2) as defined in **An5.2.2.3**.

An3.2.5 Horizontally Corrugated Longitudinal Bulkheads

An3.2.5.1

Each corrugation unit within the extension of half flange, web and half flange (i.e. single corrugation as shown in grey in **Fig. An8**) is to satisfy the following criterion:

$\eta_{column} \leq \eta_{all}$

Where:

η_{column}: Overall column buckling utilisation factor, as defined in **An5.3.1**.

Fig. An8 Single Corrugation

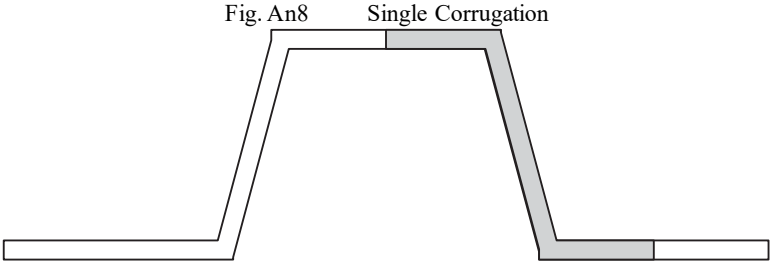

An4. Buckling Requirements for Direct Strength Analysis of Hatch Covers

Symbols

σ_{Y_P}: Yield stress of the plate panel, as defined in **An4.2.1.3**

σ_{Y_S}: Yield stress of the stiffener, as defined in **An4.2.1.3**

α: Aspect ratio of the plate panel, as defined in the symbol list of **An5.**

η_{all}: Allowable buckling utilisation factor, as defined in **An1.3.3.1**

An4.1 General

An4.1.1 Introduction

An4.1.1.1

The requirements of this section apply for the buckling assessment of hatch cover structural members based on direct strength analysis (usually by finite element method) and subjected to normal stress, shear stress and lateral pressure.

An4.1.1.2

All structural elements in the direct strength analysis carried out according to the relevant requirements are to be assessed individually. The buckling checks are to be performed for the following structural elements:

- Stiffened and unstiffened panels
- Web plate in way of openings

An4.2 Stiffened and Unstiffened Panels

An4.2.1 General

An4.2.1.1

The plate panel of a hatch cover structure is to be modelled as stiffened panel (SP) or unstiffened panel (UP), with either Method A or Method B as defined in **An1.3.1.1** to be used for the calculation of the plate buckling capacity, which in combination is also equivalent to use the buckling assessment models defined in **An1.3.1.2**.

An4.2.1.2 Average Thickness of Plate Panel

For FE analysis, where the plate thickness along a plate panel is not constant, the panel used for the buckling assessment is to be modelled with a weighted average thickness taken as:

$$t_{avr} = \frac{\sum_1^n A_i t_i}{\sum_1^n A_i}$$

Where:

A_i : Area of the *i*-th plate element.

t_i : Net thickness of the *i*-th plate element.

n : Number of finite elements defining the buckling plate panel.

An4.2.1.3 Yield Stress of the Plate Panel and Stiffener

The panel yield stress σ_{Y_P} is taken as the minimum value of the specified yield stresses of the elements within the plate panel. The stiffener yield stress σ_{Y_S} is taken as the minimum value of the specified yield stresses of the elements within the stiffener.

An4.2.2 Stiffened Panels

An4.2.2.1

For a stiffened panel (SP), each stiffener with attached plate is to be idealised as a stiffened panel model of the extent defined in the relevant requirements.

An4.2.2.2

If the stiffener properties or stiffener spacing varies within the stiffened panel, the calculations are to be performed separately for all configurations of the panels, i.e. for each stiffener and plate between the stiffeners. Plate thickness, stiffener properties and stiffener spacing at the considered location are to be assumed for the whole panel.

An4.2.2.3

The buckling check of the stiffeners of stiffened panels is only applicable to the stiffeners fitted along the longer side edges of the buckling panel.

An4.2.3 Unstiffened Panels

An4.2.3.1 Irregular Plate Panel

In way of web frames and brackets, the geometry of the panel (i.e. plate bounded by web stiffeners/face plate) may not have a rectangular shape. In this case, for FE analysis, an equivalent rectangular panel is to be defined according to **An4.2.3.2** for irregular geometry and **An4.2.3.3** for triangular geometry and to comply with buckling assessment.

An4.2.3.2 Equivalent EPP of an Unstiffened Panel with Irregular Geometry

Unstiffened panels with irregular geometry are to be idealised to equivalent panels for plate buckling assessment according to the following procedure:

(a) The four corners closest to a right angle, 90 deg, in the bounding polygon for the plate are identified.

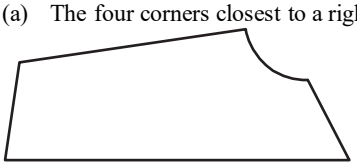

(b) The distances along the plate bounding polygon between the corners are calculated, i.e. the sum of all the straight-line segments between the end points.

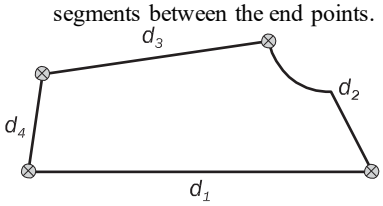

(c) The pair of opposite edges with the smallest total length is identified, i.e. minimum of d_1+d_3 and d_2+d_4.

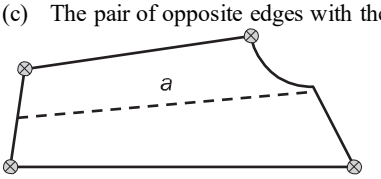

(d) A line joins the middle points of the chosen opposite edges (i.e. a mid-point is defined as the point at half the distance from one end). This line defines the longitudinal direction for the capacity model. The length of the line defines the length of the capacity model, a measured from one end point.

(e) The length of shorter side, b (mm) is to be taken as:

$$b = \frac{A}{a}$$

A: Area of the plate (mm^2)

a: Length defined in **(d)** (mm)

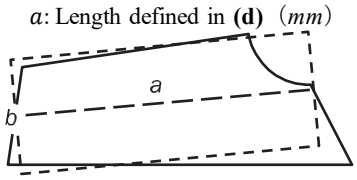

(f) The stresses from the direct strength analysis are to be transformed into the local coordinate system of the equivalent rectangular panel. These stresses are to be used for the buckling assessment.

An4.2.3.3 Modelling of an Unstiffened Plate Panel with Triangular Geometry

Unstiffened panels with triangular geometry are to be idealised to equivalent panels for plate buckling assessment according to the following procedure:

(a) Medians are constructed as shown below.

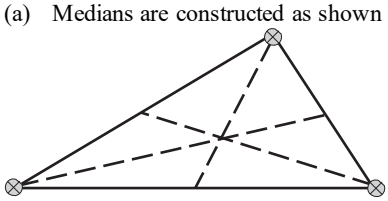

(b) The longest median is identified. This median the length of which is ℓ_1 (mm) defines the longitudinal direction for the capacity model.

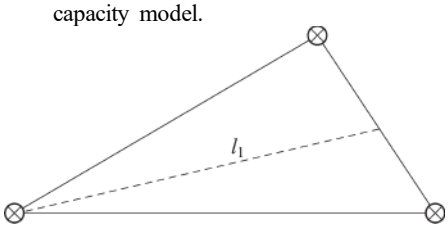

(c) The width of the model, ℓ_2 (mm) is to be taken as:

$$\ell_2 = \frac{A}{\ell_1}$$

Where:

A: Area of the plate (mm^2)

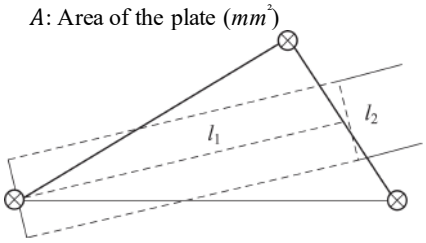

(d) The lengths of shorter side, b (mm), and of the longer side, a (mm) of the equivalent rectangular plate panel are to be taken as:

$$b = \frac{\ell_2}{C_{tri}}$$

$$a = \ell_1 C_{tri}$$

Where:

$$C_{tri} = 0.4\frac{\ell_2}{\ell_1} + 0.6$$

(e) The stresses from the direct strength analysis are to be transformed into the local coordinate system of the equivalent rectangular panel and are to be used for the buckling assessment of the equivalent rectangular panel.

An4.2.4 Reference Stress

An4.2.4.1

The stress distribution is to be taken from the direct strength analysis according to the relevant requirements and applied to the buckling model.

An4.2.4.2

For FE analysis, the reference stresses are to be calculated using the stress based reference stresses as defined in **Appendix 14.6 "STRESS BASED REFERENCE STRESSES"**.

An4.2.5 Lateral Pressure

An4.2.5.1

The lateral pressure applied to the direct strength analysis is also to be applied to the buckling assessment.

An4.2.5.2

For FE analysis, where the lateral pressure is not constant over a buckling panel defined by a number of finite plate elements, an average lateral pressure (N/mm^2) is calculated using the following formula:

$$P_{avr} = \frac{\sum_1^n A_i P_i}{\sum_1^n A_i}$$

Where:

A_i: Area of the i-th plate element (mm^2)

P_i: Lateral pressure of the i-th plate element (N/mm^2)

n: Number of finite elements in the buckling panel

An4.2.6 Buckling Criteria

An4.2.6.1 UP-A

The compressive buckling strength of UP-A is to satisfy the following criterion:

$\eta_{UP-A} \leq \eta_{all}$

Where:

η_{UP-A}: Plate buckling utilisation factor, equal to η_{plate} as defined in **An5.2.2** where UP-A model is to be used.

An4.2.6.2 UP-B

The compressive buckling strength of UP-B is to satisfy the following criterion:

$\eta_{UP-B} \leq \eta_{all}$

Where:

η_{UP-B}: Plate buckling utilisation factor, equal to η_{plate} as defined in **An5.2.2** where UP-B model is to be used.

An4.2.6.3 SP-A

The compressive buckling strength of SP-A is to satisfy the following criterion:

$\eta_{SP-A} \leq \eta_{all}$

Where:

η_{SP-A}:Buckling utilisation factor of the stiffened panel, taken as the maximum of the buckling utilisation factors calculated as below:

- The overall stiffened panel buckling utilisation factor $\eta_{overall}$ as defined in **An5.2.1**.
- The plate buckling utilisation factor η_{plate} as defined in **An5.2.2** where SP-A model is to be used.
- The stiffener buckling utilisation factor $\eta_{stiffener}$ as defined in **An5.2.3** considering separately the properties (thickness, dimensions), the pressures defined in **An4.2.5.2** and the reference stresses of each *EPP* at both sides of the stiffener.

Note 1: The stiffener buckling strength check can only be fulfilled when the overall stiffened panel capacity check, as defined in **An5.2.1** is satisfied.

An4.2.6.4 SP-B

The compressive buckling strength of SP-B is to satisfy the following criterion:

$\eta_{SP-B} \leq \eta_{all}$

Where:

η_{SP-B}:Buckling utilisation factor of the stiffened panel, taken as the maximum of the buckling utilisation factors calculated as below:

- The overall stiffened panel buckling utilisation factor $\eta_{overall}$ as defined in **An5.2.1**.
- The plate buckling utilisation factor η_{plate} as defined in **An5.2.2** where SP-B model is to be used.
- The stiffener buckling utilisation factor $\eta_{stiffener}$ as defined in **An5.2.3** considering separately the properties (thickness, dimensions), the pressures defined in **An4.2.5.2** and the reference stresses of each *EPP* at both sides of the stiffener.

Note 1: The stiffener buckling strength check can only be fulfilled when the overall stiffened panel capacity check, as defined in **An5.2.1**, is satisfied.

An4.2.6.5 Web Plate in Way of Openings

The web plate of primary supporting members with openings is to satisfy the following criterion:

$\eta_{opening} \leq \eta_{all}$

Where:

$\eta_{opening}$: Maximum web plate utilisation factor in way of openings, calculated with the definition in **An1.3.2.2** and the stress multiplier factor at failure γ_c which can be calculated following the requirements in **An5.2.4**.

An5. Buckling Capacity

Symbols

A_p: Net sectional area (mm^2) of the stiffener attached plating taken as:

$$A_p = st_p$$

A_s: Net sectional area (mm^2) of the stiffener without attached plating

a: Length (mm) of the longer side of the plate panel

b: Length (mm) of the shorter side of the plate panel

b_{eff}: Effective width (mm) of the attached plating of a stiffener as defined in **An5.2.3.5**

b_{eff1}: Effective width (mm) of the attached plating of a stiffener without the shear lag effect taken as:

- For $\sigma_x > 0$
  - For prescriptive assessment:
    $$b_{eff1} = \frac{C_{x1}b_1 + C_{x2}b_2}{2}$$
  - For FE analysis:
    $$b_{eff1} = C_x b$$
- For $\sigma_x \leq 0$
  $$b_{eff1} = b$$

b_f: Breadth (mm) of the stiffener flange

b_1, b_2: Width (mm) of plate panel on each side of the considered stiffener. For stiffened panels fitted with U-type stiffeners, b_1 and b_2 are as defined in **Fig. An3**.

C_{x1}, C_{x2}: Reduction factor defined in **Table An5** calculated for the *EPP*1 and *EPP*2 on each side of the considered stiffener according to case 1

d: Length (mm) of the side parallel to the cylindrical axis of the cylinder corresponding to the curved plate panel as shown in **Table An6**

d_f: Breadth (mm) of the extended part of the flange for L2 profiles as shown in **Fig. An2**

e_f: Distance (mm) from attached plating to centre of flange as shown in **Fig. An2** to be taken as:

$e_f = h_w$ for flat bar profile

$e_f = h_w - 0.5t_f$ for bulb profile

$e_f = h_w + 0.5t_f$ for angle, L2 and T profiles

F_{long}: Coefficient defined in **An5.2.2.4**

F_{tran}: Coefficient defined in **An5.2.2.5**

h_w: Depth (mm) of stiffener web as shown in **Fig. An2**

ℓ: Span (mm) of stiffener equal to spacing between primary supporting members or span of side frame equal to the distance between the hopper tank and top wing tank in way of the side shell

R: Radius (mm) of curved plate panel

σ_{Y_P}: Specified minimum yield stress (N/mm^2) of the plate

σ_{Y_S}: Specified minimum yield stress (N/mm^2) of the stiffener

S: Partial safety factor, unless otherwise specified in the relevant requirements, to be taken as 1.0

t_p: Net thickness (mm) of plate panel

t_w: Net stiffener web thickness (mm)

t_f: Net flange thickness (mm)

x-axis: Local axis of a rectangular buckling panel parallel to its long edge

y-axis: Local axis of a rectangular buckling panel perpendicular to its long edge

α: Aspect ratio of the plate panel, defined in **Table An5** to be taken as:

$$\alpha = \frac{a}{b}$$

β: Coefficient taken as:

$$\beta = \frac{1 - \psi}{\alpha}$$

ω: Coefficient taken as:

$$\omega = \min(3, \alpha)$$

σ_x: Normal stress (N/mm^2) applied on the edge along x-axis of the buckling panel

σ_y: Normal stress (N/mm^2) applied on the edge along y-axis of the buckling panel

σ_1: Maximum normal stress (N/mm^2) along a panel edge

σ_2: Minimum normal stress (N/mm^2) along a panel edge

σ_E: Elastic buckling reference stress (N/mm^2) to be taken as:

- For the application of the limit state of plane plate panels according to **An5.2.2.1**:

$$\sigma_E = \frac{\pi^2 E}{12(1-\nu^2)}\left(\frac{t_p}{b}\right)^2$$

- For the application of the limit state of curved plate panels according to **An5.2.2.6**:

$$\sigma_E = \frac{\pi^2 E}{12(1-\nu^2)}\left(\frac{t_p}{d}\right)^2$$

τ: Applied shear stress (N/mm^2)

τ_c: Buckling strength in shear (N/mm^2) as defined in **An5.2.2.3**

ψ: Edge stress ratio to be taken as:

$$\psi = \frac{\sigma_2}{\sigma_1}$$

γ: Stress multiplier factor acting on loads. When the factor is such that the loads reach the interaction formulae, $\gamma = \gamma_c$.

γ_c: Stress multiplier factor at failure

γ_{GEB}: Stress multiplier factor of global elastic buckling capacity

An5.1 General

An5.1.1 Introduction

An5.1.1.1

This section contains the methods for determination of the buckling capacities of plate panels, stiffeners, primary supporting members, and columns.

An5.1.1.2

For the application of this section, the stresses σ_x, σ_y and τ applied on the structural members are defined in:

- **An3.** for hull girder prescriptive buckling requirements.
- **An4.** for direct strength analysis buckling requirements of hatch covers.

An5.1.1.3 Buckling Capacity

The buckling capacity is calculated by applying the actual stress combination and then increasing or decreasing the stresses proportionally until the interaction formulae defined in **An5.2.1.1**, **An5.2.2.1** and **An5.2.3.4** are equal to 1.0, respectively.

An5.1.1.4 Buckling Utilisation Factor

The buckling utilisation factor of the structural member is equal to the highest utilisation factor obtained for the different buckling modes.

An5.1.1.5 Lateral Pressure

The lateral pressure is to be applied and considered as constant for the calculation of buckling capacities as defined in **An5.1.1.3**.

An5.2 Buckling Capacity of Plate Panels

An5.2.1 Overall Stiffened Panels

An5.2.1.1

The elastic stiffened panel limit state is based on the following interaction formula, which sets a precondition for the buckling check of stiffeners in accordance with **An5.2.3.4**:

$$\frac{\gamma_c}{\gamma_{GEB}} = 1$$

with corresponding buckling utilisation factor defined as

$$\eta_{overall} = \frac{1}{\gamma_c}$$

where the stress multiplier factors of global elastic buckling capacity, γ_{GEB}, are to be calculated based on the following formulae:

$\gamma_{GEB} = \gamma_{GEB,bi+\tau}$ for $\tau \neq 0$ and ($\sigma_x > 0$ or $\sigma_y > 0$)

$\gamma_{GEB} = \gamma_{GEB,bi}$ for $\tau = 0$ and ($\sigma_x > 0$ or $\sigma_y > 0$)

$\gamma_{GEB} = \gamma_{GEB,\tau}$ for $\tau \neq 0$ and ($\sigma_x \leq 0$ and $\sigma_y \leq 0$)

where $\gamma_{GEB,bi}$, $\gamma_{GEB,\tau}$ and $\gamma_{GEB,bi+\tau}$ are stress multiplier factors of the global elastic buckling capacity for different load combinations as defined in **An5.2.1.2**, **An5.2.1.3** and **An5.2.1.4**, respectively. For the calculation of $\gamma_{GEB,bi}$, $\gamma_{GEB,\tau}$ and $\gamma_{GEB,bi+\tau}$, neither σ_x nor σ_y are to be taken less than 0.

σ_x, σ_y: Applied normal stress (N/mm^2) to the plate panel to be taken as defined in **An5.2.2.7**.

τ: Applied shear stress (N/mm^2) to be taken as defined in **An5.2.2.7**.

An5.2.1.2

The stress multiplier factor $\gamma_{GEB,bi}$ for the stiffened panel subjected to biaxial loads is taken as:

$$\gamma_{GEB,bi} = \frac{\pi^2}{L_{B1}^2 L_{B2}^2} \frac{[D_{11}L_{B2}^4 + 2(D_{12} + D_{33})n^2 L_{B1}^2 L_{B2}^2 + n^4 D_{22} L_{B1}^4]}{L_{B2}^2 N_x + n^2 L_{B1}^2 N_y}$$

Where:

N_x: Load per unit length applied on the edge along x-axis (N/mm) of the stiffened panel taken as

$N_x = \sigma_{x,av}(A_p + A_s)/s$

For stiffened panels fitted with U-type stiffeners, stiffener spacing s is taken as:

$s = b_1 + b_2$

where b_1 and b_2 are as defined in **Fig. An3**.

N_y: Load per unit length applied on the edge along y-axis (N/mm) of the stiffened panel taken as

$N_y = c\sigma_y t_p$

L_{B1}: Stiffener span (mm) distance between primary supporting members, i.e. $L_{B1} = \ell$. Specially, for vertically stiffened side shell of single side skin bulk carriers, $L_{B1} = 0.8\ell$.

L_{B2}: Total width (mm) of stiffened panel between lateral supports taken as 6 times of the stiffener spacing, i.e. $6s$.

n: Number of half waves along the direction perpendicular to the stiffener axis. The factor $\gamma_{GEB,bi}$ is to be minimised with respect to the wave parameters n, i.e. to be taken as the smallest value larger than zero.

c: Factor taking into account the normal stress distribution in the attached plating acting perpendicular to the stiffener's axis:

$c = 0.5(1 + \Psi)$ for $0 \leq \Psi \leq 1$

$c = \frac{1}{2(1-\Psi)}$ for $\Psi < 0$

Ψ: Edge stress ratio for case 2 according to **Table An5**

$\sigma_{x,av}$: Average stress for both plate and stiffener, taken as:

$\sigma_{x,av} = \sigma_x - vc\sigma_y A_s/(A_p + A_s) \geq 0$ for $\sigma_x > 0$ and $\sigma_y > 0$

$\sigma_{x,av} = \sigma_x$ for $\sigma_x \leq 0$ or $\sigma_y \leq 0$

$D_{11}, D_{12}, D_{22}, D_{33}$: Bending stiffness coefficients (Nmm) of the stiffened panel, defined in general as:

$$\left.\begin{aligned} D_{11} &= \frac{EI_{eff}10^4}{s} \\ D_{12} &= \frac{Et_p^3 v}{12(1-v^2)} \\ D_{22} &= \frac{Et_p^3}{12(1-v^2)} \\ D_{33} &= \frac{Et_p^3}{12(1+v)} \end{aligned}\right\}$$

For stiffened panels fitted with U-type stiffeners, D_{12} and D_{22} are defined as:

$$D_{22} = \frac{Et_p^3}{12(1-v^2)}\left[1.2 + 4.8 \times Min\left(1.0, \frac{b_1^2}{h_w(b_1+b_2)}\right) \times Min\left(1.0, \left(\frac{t_w}{t_p}\right)^3\right)\right]$$

$D_{12} = vD_{22}$

h_w: Breadth of U-type stiffener web as defined in **Fig. An3**.

I_{eff}: Moment of inertia (cm^4) of the stiffener including effective width of attached plating, the same as I defined in

An5.2.3.4.

An5.2.1.3

The stress multiplier factor $\gamma_{GEB,\tau}$ for the stiffened panel subjected to pure shear load is taken as:

$$\gamma_{GEB,\tau} = \frac{\sqrt[4]{D_{11}^3 D_{22}}}{(L_{B1}/2)^2 N_{xy}}\left[8.125 + 5.64\sqrt{\frac{(D_{12}+D_{33})^2}{D_{11}D_{22}}} - 0.6\frac{(D_{12}+D_{33})^2}{D_{11}D_{22}}\right] \text{ for } D_{11}D_{22} \geq (D_{12}+D_{33})^2$$

$$\gamma_{GEB,\tau} = \frac{\sqrt{2D_{11}(D_{12}+D_{33})}}{(L_{B1}/2)^2 N_{xy}}\left[8.3 + 1.525\frac{D_{11}D_{22}}{(D_{12}+D_{33})^2} - 0.493\frac{D_{11}^2 D_{22}^2}{(D_{12}+D_{33})^4}\right] \text{ for } D_{11}D_{22} < (D_{12}+D_{33})^2$$

Where:

$N_{xy} = \tau t_p$

An5.2.1.4

The stress multiplier factor $\gamma_{GEB,bi+\tau}$ for the stiffened panel subjected to combined loads is taken as:

$$\gamma_{GEB,bi+\tau} = \frac{1}{2}\gamma_{GEB,\tau}^2\left[-\frac{1}{\gamma_{GEB,bi}} + \sqrt{\frac{1}{\gamma_{GEB,bi}^2} + 4\frac{1}{\gamma_{GEB,\tau}^2}}\right]$$

where $\gamma_{GEB,bi}$ and $\gamma_{GEB,\tau}$ are as defined in An5.2.1.2 and An5.2.1.3, respectively.

An5.2.2 Plates

An5.2.2.1 Plate Limit State

The plate limit state is based on the following interaction formulae:

$$\left(\frac{\gamma_{c1}\sigma_x S}{\sigma_{cx}}\right)^{e_0} - B\left(\frac{\gamma_{c1}\sigma_x S}{\sigma_{cx}}\right)^{\frac{e_0}{2}}\left(\frac{\gamma_{c1}\sigma_y S}{\sigma_{cy}}\right)^{\frac{e_0}{2}} + \left(\frac{\gamma_{c1}\sigma_y S}{\sigma_{cy}}\right)^{e_0} + \left(\frac{\gamma_{c1}|\tau|S}{\tau_c}\right)^{e_0} = 1$$

$$\left(\frac{\gamma_{c2}\sigma_x S}{\sigma_{cx}}\right)^{2/\beta_p^{0.25}} + \left(\frac{\gamma_{c2}|\tau|S}{\tau_c}\right)^{2/\beta_p^{0.25}} = 1 \text{ for } \sigma_x \geq 0$$

$$\left(\frac{\gamma_{c3}\sigma_y S}{\sigma_{cy}}\right)^{2/\beta_p^{0.25}} + \left(\frac{\gamma_{c3}|\tau|S}{\tau_c}\right)^{2/\beta_p^{0.25}} = 1 \text{ for } \sigma_y \geq 0$$

$$\frac{\gamma_{c4}|\tau|S}{\tau_c} = 1$$

with

$\gamma_c = Min(\gamma_{c1}, \gamma_{c2}, \gamma_{c3}, \gamma_{c4})$

and corresponding buckling utilisation factor defined as

$$\eta_{plate} = \frac{1}{\gamma_c}$$

Where:

σ_x, σ_y: Applied normal stress (N/mm^2) to the plate panel to be taken as defined in An5.2.2.7.

τ: Applied shear stress (N/mm^2) to the plate panel.

σ_{cx}: Ultimate buckling stress (N/mm^2) in direction parallel to the longer edge of the buckling panel as defined in An5.2.2.3.

σ_{cy}: Ultimate buckling stress (N/mm^2) in direction parallel to the shorter edge of the buckling panel as defined in An5.2.2.3.

τ_c: Ultimate buckling shear stress (N/mm^2) as defined in An5.2.2.3.

$\gamma_{c1}, \gamma_{c2}, \gamma_{c3}, \gamma_{c4}$: Stress multiplier factors at failure for each of the above different limit states. γ_{c2} and γ_{c3} are only to be considered when $\sigma_x \geq 0$ and $\sigma_y \geq 0$ respectively.

B: Coefficient given in Table An3.

e_0: Coefficient given in Table An3.

β_p: Plate slenderness parameter taken as:

$$\beta_p = \frac{b}{t_p}\sqrt{\frac{\sigma_{Y_P}}{E}}$$

An5.2.2.2 Reference Degree of Slenderness

The reference degree of slenderness is to be taken as:

$$\lambda = \sqrt{\frac{\sigma_{Y_P}}{K\sigma_E}}$$

Where:

K: Buckling factor, as defined in Table An5 and Table An6.

An5.2.2.3 Ultimate Buckling Stresses

The ultimate buckling stresses (N/mm^2) of plate panels are to be taken as:

$$\sigma_{cx} = C_x \sigma_{Y_P}$$
$$\sigma_{cy} = C_y \sigma_{Y_P}$$

The ultimate buckling stress of plate panels subject to shear (N/mm^2) is to be taken as:

$$\tau_c = C_\tau \frac{\sigma_{Y_P}}{\sqrt{3}}$$

Where:

C_x, C_y, C_τ : Reduction factors, as defined in **Table An5**

- For the 1st Equation of **An5.2.2.1**, when $\sigma_x < 0$ or $\sigma_y < 0$, the reduction factors are to be taken as:

$$C_x = C_y = C_\tau = 1$$

- For other cases:
  - For SP-A and UP-A, C_y is calculated according to **Table An5** by using

$$c_1 = \left(1 - \frac{1}{\alpha}\right) \geq 0$$

  - For SP-B and UP-B, C_y is calculated according to **Table An5** by using

$$c_1 = 1$$

  - For vertically stiffened single side skin of bulk carrier, C_y is calculated according to **Table An5** by using

$$c_1 = \left(1 - \frac{1}{\alpha}\right) \geq 0$$

  - For corrugation of corrugated bulkheads, C_y is calculated according to **Table An5** by using

$$c_1 = \left(1 - \frac{1}{\alpha}\right) \geq 0$$

The boundary conditions for plates are to be considered as simply supported, see cases 1, 2 and 15 of **Table An5**. If the boundary conditions differ significantly from simple support, a more appropriate boundary condition can be applied according to the different cases of **Table An5** subject to the agreement of the Society.

An5.2.2.4 Correction Factor F_{long}

The correction factor F_{long} depending on the edge stiffener types on the longer side of the buckling panel is defined in **Table An4**. An average value of F_{long} is to be used for plate panels having different edge stiffeners. For stiffener types other than those mentioned in **Table An4**, the value of c is to be agreed by the Society. In such a case, value of c higher than those mentioned in **Table An4** can be used, provided it is verified by buckling strength check of panel using non-linear FE analysis and deemed appropriate by the Society.

An5.2.2.5 Correction Factor F_{tran}

The correction factor F_{tran} is to be taken as:

- For transversely framed *EPP* of single side skin bulk carrier, between the hopper and top wing tank:
  - F_{tran}=1.25 when the two adjacent frames are supported by one tripping bracket fitted in way of the adjacent plate panels.
  - F_{tran}=1.33 when the two adjacent frames are supported by two tripping brackets each fitted in way of the adjacent plate panels.
  - F_{tran}=1.15 elsewhere.
- For the attached plate of a U-type stiffener fitted on a hatch cover:

$$F_{tran} = Max(3 - 0.08(F_{tran0} - 6)^2, 1.0) \leq 2.25$$

Where:

$$F_{tran0} = Min\left(\frac{b_2}{b_1} + \frac{6b_2^2}{\pi^2 h_w (b_1+b_2)}\left(\frac{t_w}{t_p}\right)^3, 6\right) \text{ for } EPP\ b_2$$

$$F_{tran0} = Min\left(\frac{b_1}{b_2} + \frac{6b_1^2}{\pi^2 h_w (b_2+b_1)}\left(\frac{t_w}{t_p}\right)^3, 6\right) \text{ for } EPP\ b_1$$

with b_1, b_2 and h_w as defined in **Fig. An3**.

Coefficient F defined in case 2 of **Table An5** is to be replaced by the following formula:

$$F = \left[1 - \left(\frac{K_y}{0.91 F_{tran}} - 1\right)/\lambda_p^2\right] c_1 \geq 0$$

- For other cases: F_{tran} =1.

An5.2.2.6 Curved Plate Panels

This requirement for curved plate limit state is applicable when $R/t_p \leq 2500$. Otherwise, the requirement for plate limit state

given in An5.2.2.1 is applicable.

The curved plate limit state is based on the following interaction formula:

$$\left(\frac{\gamma_c\sigma_{ax}S}{C_{ax}\sigma_{Y_P}}\right)^{1.25} - 0.5\left(\frac{\gamma_c\sigma_{ax}S}{C_{ax}\sigma_{Y_P}}\right)\left(\frac{\gamma_c\sigma_{tg}S}{C_{tg}\sigma_{Y_P}}\right) + \left(\frac{\gamma_c\sigma_{tg}S}{C_{tg}\sigma_{Y_P}}\right)^{1.25} + \left(\frac{\gamma_c\tau\sqrt{3}S}{C_{\tau}\sigma_{Y_P}}\right)^{2} = 1.0$$

with corresponding buckling utilisation factor defined as

$$\eta_{curved_plate} = \frac{1}{\gamma_c}$$

Where:

σ_{ax}: Applied axial stress (N/mm^2) to the cylinder corresponding to the curved plate panel. In case of tensile axial stresses, $\sigma_{ax} = 0$.

σ_{tg}: Applied tangential stress (N/mm^2) to the cylinder corresponding to the curved plate panel. In case of tensile tangential stresses, $\sigma_{tg} = 0$.

C_{ax}, C_{tg}, C_{τ}: Buckling reduction factor of the curved plate panel, as defined in Table An6.

The stress multiplier factor, γ_c, of the curved plate panel need not be taken less than the stress multiplier factor, γ_c, for the expanded plane panel according to An5.2.2.1.

An5.2.2.7 Applied Normal and Shear Stresses to Plate Panels

The normal stress, σ_x and σ_y (N/mm^2) to be applied for the overall stiffened panel capacity and the plate panel capacity calculations as given in An5.2.1.1 and An5.2.2.1 respectively, are to be taken as follows:

- For FE analysis, the reference stresses as defined in An4.2.4.
- For prescriptive assessment of the overall stiffened panel capacity and the plate panel capacity, the axial or transverse compressive stresses calculated according to the relevant requirements, at load calculation points of the considered stiffener or the considered elementary plate panel, as defined in **item (a)** and **item (b)** of An3.1.2.1 respectively. However, in case of transverse stiffening arrangement, the transverse compressive stress used for the assessment of the overall stiffened panel capacity is to be taken as the compressive stress calculated at load calculation points of the stiffener attached plating, as defined in **item (a)** of An3.1.2.1.

For grillage analysis where the stresses are obtained based on beam theory, the stresses taken as:

$$\sigma_x = \frac{\sigma_{xb} + \nu\sigma_{yb}}{1-\nu^2}$$

$$\sigma_y = \frac{\sigma_{yb} + \nu\sigma_{xb}}{1-\nu^2}$$

Where:

σ_{xb}, σ_{yb} : Stress (N/mm^2) from grillage beam analysis respectively along x or y axis of the plate attached to the PSM web.

The shear stress τ (N/mm^2) to be applied for the overall stiffened panel capacity and the plate panel capacity calculations as given in An5.2.1.1 and An5.2.2.1 respectively, are to be taken as follows:

- For FE analysis, the reference shear stresses as defined in An4.2.4.
- For prescriptive assessment of the plate panel capacity, the shear stresses calculated according to the relevant requirements, at load calculation points of the considered elementary plate panel, as defined in **item (a)** of An3.1.2.1.
- For prescriptive assessment of the overall stiffened panel capacity, the shear stresses calculated according to the relevant requirements, at the following load calculation point:
  - At the middle of the full span, ℓ, of the considered stiffener.
  - At the intersection point between the stiffener and its attached plating.
- For grillage beam analysis, $\tau = 0$ in the plate attached to the PSM web.

Table An3 Definition of Coefficients B and e_0

Applied stress	B	e_0
$\sigma_x \geq 0$ and $\sigma_y \geq 0$	$0.7 - 0.3\,\beta_p/\alpha^2$	$2/\beta_p^{0.25}$
$\sigma_x < 0$ or $\sigma_y < 0$	1.0	2.0

Table An4 Correction Factor F_{long}

Structural element types			F_{long}	c
Unstiffened Panel			1.0	N/A
Stiffened Panel	Stiffener not fixed at both ends		1.0	N/A
	Stiffener fixed at both ends	Flat bar(1)	$F_{long} = c + 1 \ for \ \frac{t_w}{t_p} > 1$ $F_{long} = c\left(\frac{t_w}{t_p}\right)^3 + 1 \ for \ \frac{t_w}{t_p} \leq 1$	0.10
		Bulb profile		0.30
		Angle and L2 profiles		0.40
		T profile		0.30
		Girder of high rigidity (e.g. bottom transverse)	1.4	N/A
		U-type profile fitted on hatch cover(2)	- Plate on which the U-type profile is fitted, including $EPP \ b_1$ and $EPP \ b_2$ - For $b_2 < b_1$: $F_{long} = 1$ - For $b_2 \geq b_1$: $F_{long} = \left(1.55 - 0.55\frac{b_1}{b_2}\right)\left[1 + c\left(\frac{t_w}{t_p}\right)^3\right]$ - Other plates of the U-type profile: $F_{long} = 1$	0.2

(1) t_w is the net web thickness (mm) without the correction defined in **An5.2.3.2**.
(2) b_1, b_2 and t_w are defined in **Fig. An3**.

Fig. An9 Transverse Stiffened Bilge Plating

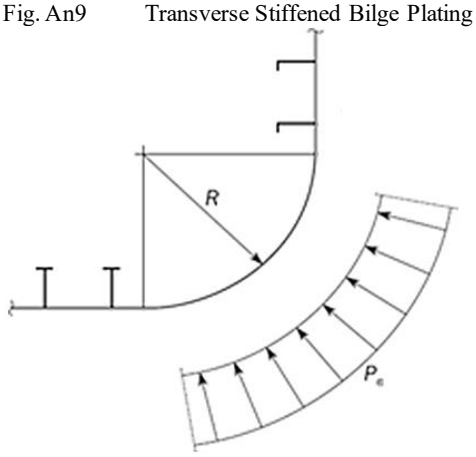

Table An5 Buckling Factor and Reduction Factor for Plane Plate Panels

Case	Stress ratio ψ	Aspect ratio α	Buckling factor K	Reduction factor C
1 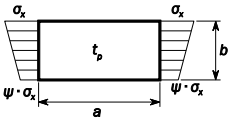	$1 \geq \psi \geq 0$		$K_x = F_{long}\dfrac{8.4}{\psi + 1.1}$	When $\sigma_x \leq 0$: $C_x = 1$ When $\sigma_x > 0$: $C_x = 1$ for $\lambda \leq \lambda_c$ $C_x = c\left(\frac{1}{\lambda} - \frac{0.22}{\lambda^2}\right)$ for $\lambda > \lambda_c$ Where: $c = (1.25 - 0.12\psi) \leq 1.25$ $\lambda_c = \dfrac{c}{2}\left(1 + \sqrt{1 - \dfrac{0.88}{c}}\right)$
	$0 > \psi > -1$		$K_x = F_{long}[7.63 - \psi(6.26 - 10\psi)]$	
	$\psi \leq -1$		$K_x = F_{long}[5.975(1 - \psi)^2]$	
2 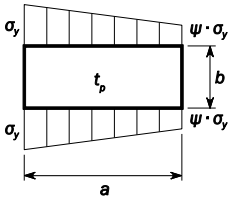	$1 \geq \psi \geq 0$		$K_y = F_{tran}\dfrac{2\left(1 + \frac{1}{\alpha^2}\right)^2}{1 + \psi + \frac{(1-\psi)}{100}\left(\frac{2.4}{\alpha^2} + 6.9f_1\right)}$	When $\sigma_y \leq 0$: $C_y = 1$ When $\sigma_y > 0$: $C_y = c\left(\dfrac{1}{\lambda} - \dfrac{R + F^2(H - R)}{\lambda^2}\right)$ Where: $c = (1.25 - 0.12\psi) \leq 1.25$ $R = \lambda(1 - \lambda/c)$ for $\lambda < \lambda_c$ $R = 0.22$ for $\lambda \geq \lambda_c$ $\lambda_c = 0.5c\left(1 + \sqrt{1 - 0.88/c}\right)$ $F = \left[1 - \left(\dfrac{K}{0.91} - 1\right)/\lambda_p^2\right]c_1 \geq 0$ $\lambda_p^2 = \lambda^2 - 0.5$ for $1 \leq \lambda_p^2 \leq 3$ c_1 as defined in **An5.2.2.3** $H = \lambda - \dfrac{2\lambda}{c(T + \sqrt{T^2 - 4})} \geq R$ $T = \lambda + \dfrac{14}{15\lambda} + \dfrac{1}{3}$
		$\alpha \leq 6$	$f_1 = (1 - \psi)(\alpha - 1)$	
		$\alpha > 6$	$f_1 = 0.6(1 - \frac{6\psi}{\alpha})(\alpha + \frac{14}{\alpha})$ but not greater than $14.5 - \frac{0.35}{\alpha^2}$	
	$0 \geq \psi \geq 1 - \frac{4\alpha}{3}$		$K_y = \dfrac{200F_{tran}(1 + \beta^2)^2}{(1 - f_3)(100 + 2.4\beta^2 + 6.9f_1 + 23f_2)}$	
		$\alpha > 6(1 - \psi)$	$f_1 = 0.6(\frac{1}{\beta} + 14\beta)$ but not greater than $14.5 - 0.35\beta^2$ $f_2 = f_3 = 0$	
		$3(1 - \psi) \leq \alpha \leq 6(1 - \psi)$	$f_1 = \frac{1}{\beta} - 1$ $f_2 = f_3 = 0$	
		$1.5(1 - \psi) \leq \alpha < 3(1 - \psi)$	$f_1 = \frac{1}{\beta} - (2 - \omega\beta)^4 - 9(\omega\beta - 1)(\frac{2}{3} - \beta)$ $f_2 = f_3 = 0$	

	$0 \geq \psi \geq 1 - \frac{4\alpha}{3}$	$1 - \psi \leq \alpha < 1.5(1-\psi)$	For $\alpha > 1.5$: $f_1 = 2\left(\frac{1}{\beta} - 16(1-\frac{\omega}{3})^4\right)\left(\frac{1}{\beta} - 1\right)$ $f_2 = 3\beta - 2$ $f_3 = 0$ For $\alpha \leq 1.5$: $f_1 = 2\left(\frac{1.5}{1-\psi} - 1\right)\left(\frac{1}{\beta} - 1\right)$ $f_2 = \frac{\psi(1-16f_4^2)}{1-\alpha}$ $f_3 = 0$ $f_4 = (1.5 - Min(1.5;\alpha))^2$	
		$0.75(1-\psi) \leq \alpha < 1 - \psi$	$f_1 = 0$ $f_2 = 1 + 2.31(\beta - 1) - 48\left(\frac{4}{3} - \beta\right) f_4^2$ $f_3 = 3f_4(\beta - 1)\left(\frac{f_4}{1.81} - \frac{\alpha - 1}{1.31}\right)$ $f_4 = (1.5 - Min(1.5;\alpha))^2$	
	$\psi < 1 - \frac{4\alpha}{3}$	$K_y = 5.972F_{tran}\frac{\beta^2}{1 - f_3}$ Where: $f_3 = f_5\left(\frac{f_5}{1.81} + \frac{1 + 3\psi}{5.24}\right)$ $f_5 = \frac{9}{16}(1 + Max(-1;\psi))^2$		
3 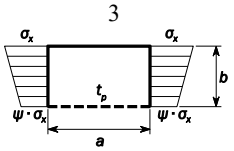	$1 \geq \psi \geq 0$	$K_x = \frac{4(0.425 + 1/\alpha^2)}{3\psi + 1}$		For UP-A: $C_x = 1$ for $\lambda \leq 0.75$ $C_x = \frac{0.75}{\lambda}$ for $\lambda > 0.75$ For UP-B: $C_x = 1$ for $\lambda \leq 0.7$ $C_x = \frac{1}{\lambda^2 + 0.51}$ for $\lambda > 0.7$
	$0 > \psi \geq -1$	$K_x = 4(0.425 + 1/\alpha^2)(1 + \psi) - 5\psi(1 - 3.42\psi)$		
4 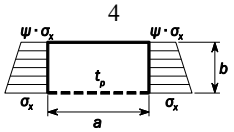	$1 \geq \psi \geq -1$	$K_x = \left(0.425 + \frac{1}{\alpha^2}\right)\frac{3 - \psi}{2}$		
5 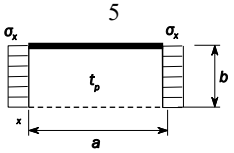	–	$\alpha \geq 1.64$	$K_x = 1.28$	
		$\alpha < 1.64$	$K_x = \frac{1}{\alpha^2} + 0.56 + 0.13\alpha^2$	
6	$1 \geq \psi \geq 0$	$K_y = \frac{4(0.425 + \alpha^2)}{(3\psi + 1)\alpha^2}$		For UP-A: $C_x = 1$ for $\lambda \leq 0.75$

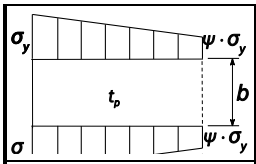	$0 > \psi \geq -1$		$K_y = 4(0.425+\alpha^2)(1+\psi)\frac{1}{\alpha^2}$ $-5\psi(1-3.42\psi)\frac{1}{\alpha^2}$	$C_x = \frac{0.75}{\lambda}$ for $\lambda > 0.75$ For UP-B: $C_y = 1$ for $\lambda \leq 0.7$ $C_y = \frac{1}{\lambda^2+0.51}$ for $\lambda > 0.7$
7 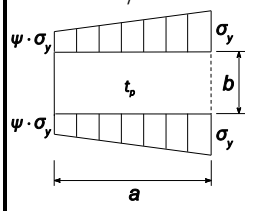	$1 \geq \psi \geq -1$		$K_y = 4(0.425+\alpha^2)\frac{(3-\psi)}{2\alpha^2}$	
8 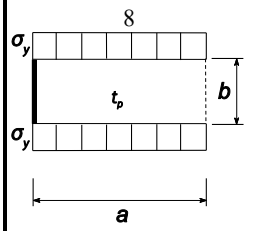	–		$K_y = 1+\frac{0.56}{\alpha^2}+\frac{0.13}{\alpha^4}$	
9 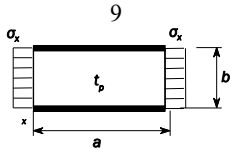	–		$K_x = 6.97$	$C_x = 1$ for $\lambda \leq 0.83$ $C_x = 1.13\left(\frac{1}{\lambda}-\frac{0.22}{\lambda^2}\right)$ for $\lambda > 0.83$
10 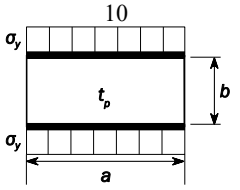	–		$K_y = 4+\frac{2.07}{\alpha^2}+\frac{0.67}{\alpha^4}$	$C_y = 1$ for $\lambda \leq 0.83$ $C_y = 1.13\left(\frac{1}{\lambda}-\frac{0.22}{\lambda^2}\right)$ for $\lambda > 0.83$
11 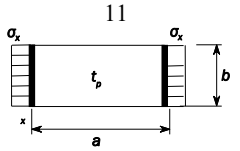	–	$\alpha \geq 4$	$K_x = 4$	$C_x = 1$ for $\lambda \leq 0.83$ $C_x = 1.13\left(\frac{1}{\lambda}-\frac{0.22}{\lambda^2}\right)$ for $\lambda > 0.83$
		$\alpha < 4$	$K_x = 4+2.74\left[\frac{4-\alpha}{3}\right]^4$	
12 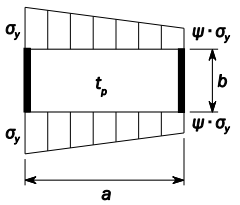	–		$K_y = K_y$ determined as per case 2	For $\alpha < 2$: $C_y = C_{y2}$ For $\alpha \geq 2$: $C_y = \left(1.06+\frac{1}{10\alpha}\right)C_{y2}$ Where: C_{y2}: C_y determined as per case 2
13 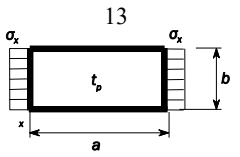	–	$\alpha \geq 4$	$K_x = 6.97$	$C_x = 1$ for $\lambda \leq 0.83$ $C_x = 1.13\left(\frac{1}{\lambda}-\frac{0.22}{\lambda^2}\right)$ for $\lambda > 0.83$
		$\alpha < 4$	$K_x = 6.97+3.1\left[\frac{4-\alpha}{3}\right]^4$	
14	–		$K_y = \frac{6.97}{\alpha^2}+\frac{3.1}{\alpha^2}\left[\frac{4-1/\alpha}{3}\right]^4$	$C_y = 1$ for $\lambda \leq 0.83$ $C_y = 1.13\left(\frac{1}{\lambda}-\frac{0.22}{\lambda^2}\right)$ for $\lambda > 0.83$

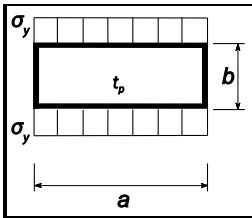			
15 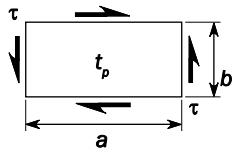	–	$K_\tau = \sqrt{3}\left[5.34 + \frac{4}{\alpha^2}\right]$	$C_\tau = 1$ for $\lambda \leq 0.84$ $C_\tau = \frac{0.84}{\lambda}$ for $\lambda > 0.84$
16 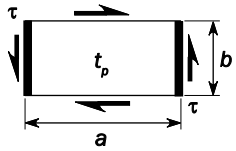	–	$K_\tau = \sqrt{3}\left\{5.34 + Max\left[\frac{4}{\alpha^2}; \frac{7.15}{\alpha^{2.5}}\right]\right\}$	
17 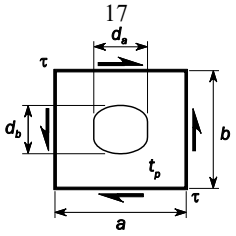	–	$K_\tau = K_{\tau case15} r$ $K_{\tau case15}$: K_τ according to case 15 r: opening reduction factor taken as: $r = \left(1 - \frac{d_a}{a}\right)\left(1 - \frac{d_b}{b}\right)$ with $\frac{d_a}{a} \leq 0.7$ and $\frac{d_b}{b} \leq 0.7$	
18 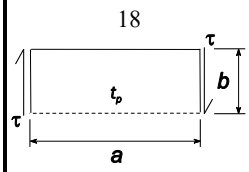	–	$K_\tau = \sqrt{3}(0.6 + 4/\alpha^2)$	$C_\tau = 1$ for $\lambda \leq 0.84$ $C_\tau = \frac{0.84}{\lambda}$ for $\lambda > 0.84$
19 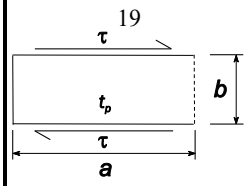	–	$K_\tau = 8$	

Edge boundary conditions:

- - - - - - - - - - Plate edge free.

———————— Plate edge simply supported.

▬▬▬▬▬▬▬▬ Plate edge clamped.

Note 1: Cases listed are general cases. Each stress component (σ_x,σ_y) is to be understood in local coordinates.

Table An6 Buckling and Reduction Factor for Curved Plate Panel with $R/t_p \leq 2500$

Case	Aspect ratio	Buckling factor K	Reduction factor C
1 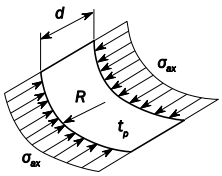	$\frac{d}{R} \leq 0.5\sqrt{\frac{R}{t_p}}$	$K = 1 + \frac{2}{3}\frac{d^2}{Rt_p}$	For general application: $C_{ax} = 1$ for $\lambda \leq 0.25$ $C_{ax} = 1.233 - 0.933\lambda$ for $0.25 < \lambda \leq 1$ $C_{ax} = {}^{0.3}/_{\lambda^3}$ for $1 < \lambda \leq 1.5$ $C_{ax} = {}^{0.2}/_{\lambda^2}$ for $\lambda > 1.5$ For curved single fields, e.g. bilge plating, which are bounded by plane panels as shown in **Fig. An9**: $C_{ax} = \frac{0.65}{\lambda^2} \leq 1.0$
	$\frac{d}{R} > 0.5\sqrt{\frac{R}{t_p}}$	$K = 0.267\frac{d^2}{Rt_p}\left[3 - \frac{d}{R}\sqrt{\frac{t_p}{R}}\right] \geq 0.4\frac{d^2}{Rt_p}$	
2 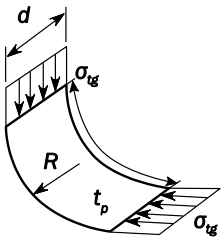	$\frac{d}{R} \leq 1.63\sqrt{\frac{R}{t_p}}$	$K = \frac{d}{\sqrt{Rt_p}} + 3\frac{(Rt_p)^{0.175}}{d^{0.35}}$	For general application: $C_{tg} = 1$ for $\lambda \leq 0.4$ $C_{tg} = 1.274 - 0.686\lambda$ for $0.4 < \lambda \leq 1.2$ $C_{tg} = \frac{0.65}{\lambda^2}$ for $\lambda > 1.2$ For curved single fields, e.g. bilge plating, which are bounded by plane panels as shown in **Fig. An9**: $C_{ax} = \frac{0.8}{\lambda^2} \leq 1.0$
	$\frac{d}{R} > 1.63\sqrt{\frac{R}{t_p}}$	$K = 0.3\frac{d^2}{R^2} + 2.25\left(\frac{R^2}{dt_p}\right)^2$	
3 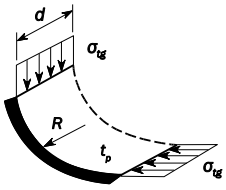	$\frac{d}{R} \leq \sqrt{\frac{R}{t_p}}$	$K = \frac{0.6d}{\sqrt{Rt_p}} + \frac{\sqrt{Rt_p}}{d} - 0.3\frac{Rt_p}{d^2}$	As in load case 2.
	$\frac{d}{R} > \sqrt{\frac{R}{t_p}}$	$K = 0.3\frac{d^2}{R^2} + 0.291\left(\frac{R^2}{dt_p}\right)^2$	
4 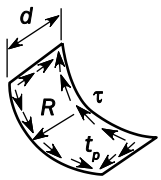	$\frac{d}{R} \leq 8.7\sqrt{\frac{R}{t_p}}$	$K = \sqrt{3}\sqrt{28.3 + \frac{0.67d^3}{R^{1.5}t_p^{1.5}}}$	$C_\tau = 1$ for $\lambda \leq 0.4$ $C_\tau = 1.274 - 0.686\lambda$ for $0.4 < \lambda \leq 1.2$ $C_\tau = \frac{0.65}{\lambda^2}$ for $\lambda > 1.2$
	$\frac{d}{R} > 8.7\sqrt{\frac{R}{t_p}}$	$K = \sqrt{3}\frac{0.28d^2}{R\sqrt{Rt_p}}$	

Edge boundary conditions:

- - - - - - - - - - Plate edge free.

———————— Plate edge simply supported.

▬▬▬▬▬▬ Plate edge clamped.

An5.2.3 Stiffeners

An5.2.3.1 Buckling Modes

The following buckling modes are to be checked:

- Stiffener induced failure (*SI*)

- Associated plate induced failure (*PI*)

An5.2.3.2 Web Thickness of Flat Bar

For accounting the decrease of the stiffness due to local lateral deformation, the effective web thickness (*mm*) of flat bar stiffener is to be used in **An5.2.1** and **An5.2.3.4** for the calculation of the net sectional area, A_s, the net section modulus, Z, and the moment of inertia, I, of the stiffener and is taken as:

$$t_{w_red} = t_w\left(1 - \frac{2\pi^2}{3}\left(\frac{h_w}{s}\right)^2\left(1 - \frac{b_{eff1}}{s}\right)\right)$$

An5.2.3.3 Idealisation of Bulb Profile

Bulb profiles are to be considered as equivalent angle profiles. The net dimensions (*mm*) of the equivalent built-up section are to be obtained from the following formulae.

$$h_w = h'_w - \frac{h'_w}{9.2} + 2$$

$$b_f = \alpha\left(t'_w + \frac{h'_w}{6.7} - 2\right)$$

$$t_f = \frac{h'_w}{9.2} - 2$$

$$t_w = t'_w$$

Where:

h'_w, t'_w: Net height and thickness (*mm*) of a bulb section as shown in **Fig. An10**.

α: Coefficient equal to:

$\alpha = 1.1 + \frac{(120 - h'_w)^2}{3000}$ for $h'_w \leq 120$

$\alpha = 1.0$ for $h'_w > 120$

An5.2.3.4 Ultimate Buckling Capacity

When $\sigma_a + \sigma_b + \sigma_w > 0$ while initially setting $\gamma = 1$, the ultimate buckling capacity for stiffeners is to be checked according to the following interaction formula:

$$\frac{\gamma_c\sigma_a + \sigma_b + \sigma_w}{\sigma_Y} S = 1$$

with the corresponding buckling utilisation factor defined as

$$\eta_{stiffener} = \frac{1}{\gamma_c}$$

Where:

σ_a : Effective axial stress (N/mm^2) at mid span of the stiffener, acting on the stiffener with its attached plating.

$$\sigma_a = \sigma_x \frac{s\,t_p + A_s}{b_{eff1}t_p + A_s}$$

σ_x: Nominal axial stress (N/mm^2) acting on the stiffener with its attached plating.

- For FE analysis, σ_x is the FE corrected stress as defined in **An5.2.3.6** in the attached plating in the direction of the stiffener axis.
- For prescriptive assessment, σ_x is the axial stress calculated according to **An3.2.2.1** at load calculation point of the stiffener, as defined in **An3.1.2.1**.
- For grillage beam analysis, σ_x is the stress acting along the *x*-axis of the attached buckling panel.

σ_Y: Specified minimum yield stress (N/mm^2) of the material

$\sigma_Y = \sigma_{Y_S}$ for stiffener induced failure (*SI*).

$\sigma_Y = \sigma_{Y_P}$ for plate induced failure (*PI*).

σ_b: Bending stress (N/mm^2) in the stiffener

$$\sigma_b = \frac{M_0 + M_1 + M_2}{1000Z}$$

Z: Net section modulus (cm^3) of stiffener including effective width of plating according to **An5.2.3.5**, to be taken as:

- The section modulus calculated at the top of stiffener flange for stiffener induced failure (*SI*).
- The section modulus calculated at the attached plating for plate induced failure (*PI*).

M_2: Bending moment (*Nmm*) due to eccentricity of sniped stiffeners, to be taken as

$M_2 = 0$ for continuous stiffeners

$M_2 = C_{snip} w_{na} \gamma \sigma_x (A_p + A_s)$ for stiffeners sniped at one or both ends.

C_{snip}: Coefficient to account for the end effect of the stiffener sniped at one or both ends, to be taken as

$C_{snip} = -1.2$ for stiffener induced failure (*SI*)

$C_{snip} = 1.2$ for plate induced failure (*PI*).

M_1: Bending moment (*Nmm*) due to the lateral load *P*:

$M_1 = C_i \frac{|P| s l^2}{24 \times 10^3}$ for continuous stiffener

$M_1 = C_i \frac{|P| s l^2}{8 \times 10^3}$ for sniped stiffener

$M_1 = C_i \frac{|P| s l^2}{14.2 \times 10^3}$ for stiffener sniped at one end and continuous at the other end

P: Lateral load (kN/m^2)

- For FE analysis, *P* is the average pressure as defined in **An4.2.5.2** in the attached plating.
- For prescriptive assessment, *P* is the pressure calculated at load calculation point of the stiffener, as defined in **An3.1.2.1**.

C_i: Pressure coefficient:

$C_i = C_{SI}$ for stiffener induced failure (*SI*).

$C_i = C_{PI}$ for plate induced failure (*PI*).

C_{PI}: Plate induced failure pressure coefficient:

$C_{PI} = 1$ if the lateral pressure is applied on the side opposite to the stiffener.

$C_{PI} = -1$ if the lateral pressure is applied on the same side as the stiffener.

C_{SI}: Stiffener induced failure pressure coefficient:

$C_{SI} = -1$ if the lateral pressure is applied on the side opposite to the stiffener.

$C_{SI} = 1$ if the lateral pressure is applied on the same side as the stiffener.

M_0: Bending moment (*Nmm*) due to the lateral deformation *w* of stiffener:

$M_0 = F_E C_{sl} \frac{\gamma}{\gamma_{GEB} - \gamma} w_0$ with precondition $\gamma_{GEB} - \gamma > 0$

γ_{GEB}: Stress multiplier factor of global elastic buckling capacity as defined in **An5.2.1**.

F_E: Ideal elastic buckling force (*N*) of the stiffener

$$F_E = \left(\frac{\pi}{\ell}\right)^2 EI \cdot 10^4$$

I: Moment of inertia (cm^4) of the stiffener including effective width of attached plating according to **An5.2.3.5**. *I* is to comply with the following requirement:

$$I \geq \frac{s t_p^3}{12 \cdot 10^4}$$

t_p: Net thickness of plate (*mm*) to be taken as

- For prescriptive requirements: the mean thickness of the two attached plating panels,
- For FE analysis: the thickness of the considered *EPP* on one side of the stiffener.

C_{sl}: Deformation reduction factor to account for global slenderness, to be taken as:

$C_{sl} = 1 - \frac{1}{12}\lambda_G^4$ for $\lambda_G \leq 1.56$

$C_{sl} = 3/\lambda_G^4$ for $\lambda_G > 1.56$

λ_G: The reference degree of global slenderness of the stiffened panel, to be taken as

$$\lambda_G = \sqrt{\frac{\gamma_{\sigma Y}}{\gamma_{GEB}}}$$

$$\gamma_{\sigma Y} = \frac{\min(\sigma_{Y_P}, \sigma_{Y_S})}{\sqrt{\sigma_{x,av}^2 + \sigma_y^2 - \sigma_{x,av}\sigma_y + 3\tau^2}}$$

$\sigma_{x,av}$: Average stress for both plate and stiffener as defined in **An5.2.1.2**.

σ_y: Applied transverse stress (N/mm^2) to the plate panel as defined in **An5.2.1.1**.

τ: Applied shear stress (N/mm^2) to the plate panel as defined in **An5.2.1.1**.

w_0: Assumed imperfection (*mm*) to be taken as:

$$w_0 = \ell/1000$$

σ_w: Stress due to torsional deformation (N/mm^2) to be taken as:

- For stiffener induced failure (*SI*)
  - For $\sigma_a > 0$

$\sigma_w = E y_w e_f \Phi_0 \left(\frac{m_{tor}\pi}{l_{tor}}\right)^2 \left(\frac{1}{1-\frac{\gamma\sigma_a}{\sigma_{ET}}} - 1\right)$ with precondition $\sigma_{ET} - \gamma\sigma_a > 0$

- For $\sigma_a \leq 0$

  $\sigma_w = 0$

- For plate induced failure (*PI*)

  $\sigma_w = 0$

y_w: Distance (mm) from centroid of stiffener cross section to the free edge of stiffener flange, to be taken as:

$y_w = \frac{t_w}{2}$ for flat bar

$y_w = b_f - \frac{h_w t_w^2 + t_f b_f^2}{2A_s}$ for angle and bulb profiles

$y_w = b_{f-out} + 0.5t_w - \frac{h_w t_w^2 + t_f(b_f^2 - 2b_f d_f)}{2A_s}$ for L2 profile

$y_w = \frac{b_f}{2}$ for T profile.

Φ_0: Coefficient taken as:

$$\Phi_0 = \frac{l_{tor}}{m_{tor} h_w} 10^{-4}$$

σ_{ET}: Reference stress (N/mm^2) for torsional buckling to be taken as:

$$\sigma_{ET} = \frac{E}{I_p}\left[\left(\frac{m_{tor}\pi}{\ell_{tor}}\right)^2 I_\omega \cdot 10^2 + \frac{1}{2(1+\nu)} I_T + \left(\frac{\ell_{tor}}{m_{tor}\pi}\right)^2 \varepsilon \cdot 10^{-4}\right]$$

I_p: Net polar moment of inertia (cm^4) of the stiffener about point *C* as shown in **Fig. An2**, as defined in **Table An7**.

I_T: Net St. Venant's moment of inertia (cm^4) of the stiffener as defined in **Table An7**.

I_ω: Net sectorial moment of inertia (cm^6) of the stiffener about point *C* as shown in **Fig. An2**, as defined in **Table An7**.

ℓ_{tor}: Stiffener span, distance equal to spacing between primary supporting members, i.e. $\ell_{tor}=\ell$. When the stiffener is supported by tripping brackets, ℓ_{tor} should be taken as the maximum spacing between the adjacent primary supporting members and fitted tripping brackets.

m_{tor}: Number of half waves, taken as a positive integer so as to give smallest reference stress for torsional buckling.

ε: Degree of fixation (mm^2) to be taken as:

$\varepsilon = \left(\frac{3b}{t_p^3} + \frac{2h_w}{t_w^3}\right)^{-1}$ for bulb, angle, L2 and T profiles;

$\varepsilon = \left(\frac{t_p^3}{3b}\right)$ for flat bars.

A_w: Net web area (mm^2)

A_f: Net flange area (mm^2)

An5.2.3.5 Effective Width of Attached Plating

The effective width of attached plating of stiffeners b_{eff} (mm) is to be taken as:

- For $\sigma_x > 0$:
  - For FE analysis,

    $b_{eff} = \min(C_x b, \chi_s s)$

  - For prescriptive assessment,

    $b_{eff} = \min\left(\frac{C_{x1}b_1 + C_{x2}b_2}{2}, \chi_s s\right)$

- For $\sigma_x \leq 0$:
  - $b_{eff} = \chi_s s$

Where:

χ_s: Effective width coefficient to be taken as:

$\chi_s = \frac{1.12}{1+\frac{1.75}{\left(\frac{\ell_{eff}}{s}\right)^{1.6}}} \leq 1.0$ for $\frac{\ell_{eff}}{s} \geq 1$

$\chi_s = 0.407\frac{\ell_{eff}}{s}$ for $\frac{\ell_{eff}}{s} < 1$

ℓ_{eff}: Effective length (mm) of the stiffener taken as:

$\ell_{eff} = \frac{\ell}{\sqrt{3}}$ for stiffener fixed at both ends.

$\ell_{eff} = 0.75\ell$ for stiffener simply supported at one end and fixed at the other.

$\ell_{eff} = \ell$ for stiffener simply supported at both ends.

An5.2.3.6 FE Corrected Stresses for Stiffener Capacity

When the reference stresses σ_x and σ_y obtained by FE analysis according to **An4.2.4** are both compressive, σ_x is to be corrected according to the following formulae:

- If $\sigma_x < \nu\sigma_y$

  $\sigma_{xcor} = 0$

- If $\sigma_x \geq \nu\sigma_y$

  $\sigma_{xcor} = \sigma_x - \nu\sigma_y$

Fig. An10 Idealisation of Bulb Stiffener

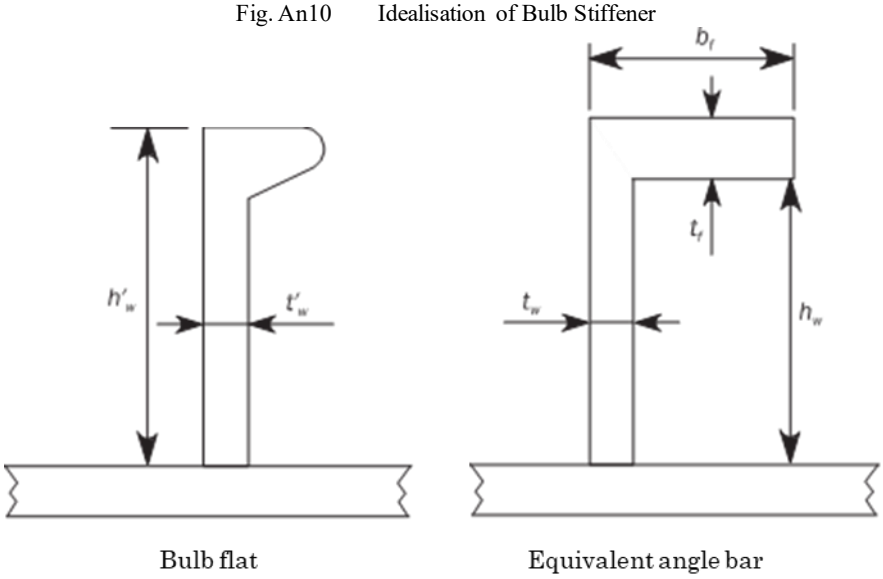

Table An7 Moments of Inertia

	Flat bars (1)	Bulb, angle, L2 and T profiles
I_P	$\dfrac{h_w^3 t_w}{3 \times 10^4}$	$\left(\dfrac{A_w(e_f - 0.5t_f)^2}{3} + A_f e_f^2\right)10^{-4}$
I_T	$\dfrac{h_w t_w^3}{3 \times 10^4}\left(1 - 0.63\dfrac{t_w}{h_w}\right)$	$\dfrac{(e_f - 0.5t_f)t_w^3}{3 \times 10^4}\left(1 - 0.63\dfrac{t_w}{e_f - 0.5t_f}\right) + \dfrac{b_f t_f^3}{3 \times 10^4}\left(1 - 0.63\dfrac{t_f}{b_f}\right)$
I_ω	$\dfrac{h_w^3 t_w^3}{36 \times 10^6}$	For bulb, angle and L2 profiles(2). $\dfrac{A_f^3 + A_w^3}{36 \times 10^6} + \dfrac{e_f^2}{10^6}\left(\dfrac{A_f b_f^2 + A_w t_w^2}{3} - \dfrac{(A_f(b_f - 2d_f) + A_w t_w)^2}{4(A_f + A_w)} - A_f d_f(b_f - d_f)\right)$ For T profiles. $\dfrac{b_f^3 t_f e_f^2}{12 \times 10^6}$

(1) t_w is the net web thickness (mm). t_{w_red} as defined in **An5.2.3.2** is not to be used in this table.

(2) d_f is to be taken as 0 for bulb and angle profiles.

An5.2.4 Primary Supporting Members

An5.2.4.1 Web Plate in Way of Openings

The web plate of primary supporting members with openings is to be assessed for buckling based on the combined axial compressive and shear stresses.

The web plate adjacent to the opening on both sides is to be considered as individual unstiffened plate panels as shown in **Table An8**.

The interaction formulae of **An5.2.2.1** are to be used with:

- $\sigma_x = \sigma_{av}$
- $\sigma_y = 0$
- $\tau = \tau_{av}$

Where:

σ_{av} : Weighted average compressive stress (N/mm^2) in the area of web plate being considered, i.e. *P1*, *P2*, or *P3* as shown in **Table An8**.

For the application of **Table An8**, the weighted average shear stress is to be taken as:

- Opening modelled in primary supporting members:

  τ_{av} : Weighted average shear stress (N/mm^2) in the area of web plate being considered, i.e. *P1*, *P2*, or *P3* as shown in **Table An8**.

- Opening not modelled in primary supporting members:

  τ_{av} : Weighted average shear stress (N/mm^2) given in **Table An8**.

An5.2.4.2 Reduction Factors of Web Plate in Way of Openings

The reduction factors, C_x or C_y in combination with, C_τ of the plate panel(s) of the web adjacent to the opening is to be taken as shown in **Table An8**.

An5.2.4.3

The equivalent plate panel of web plate of primary supporting members crossed by perpendicular stiffeners is to be idealised as shown in **Fig. An11**.

Table An8 Reduction Factors

Configuration[1]	C_x, C_y	C_τ	
		Opening modelled in PSM	Opening not modelled in PSM
(a) Without edge reinforcements:[2] 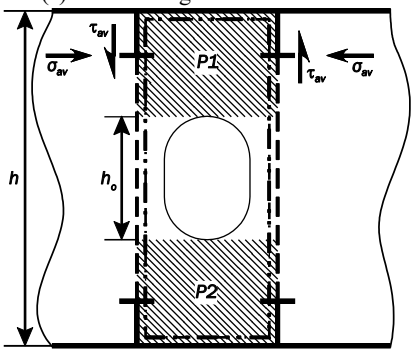	Separate reduction factors are to be applied to areas $P1$ and $P2$ using case 3 or case 6 in **Table An5**, with edge stress ratio: $\psi = 1.0$	Separate reduction factors are to be applied to areas $P1$ and $P2$ using case 18 or case 19 in **Table An5**	When case 17 of **Table An5** is applicable: A common reduction factor is to be applied to areas $P1$ and $P2$ using case 17 in **Table An5** with: $\tau_{av} = \tau_{av}$ *(web)* When case 17 of **Table An5** is not applicable: Separate reduction factors are to be applied to areas $P1$ and $P2$ using case 18 or case 19 in **Table An5** with: $\tau_{av} = \tau_{av}$ *(web)* $h/(h-h_0)$
(b) With edge reinforcements: 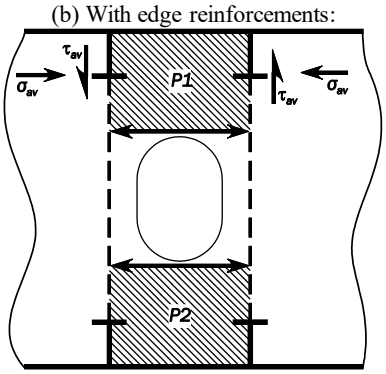	Separate reduction factors are to be applied for areas $P1$ and $P2$ using C_x for case 1 or C_y for case 2 in **Table An5** with stress ratio: $\psi = 1.0$	Separate reduction factors are to be applied for areas $P1$ and $P2$ using case 15 in **Table An5**.	Separate reduction factors are to be applied to areas $P1$ and $P2$ using case 15 in **Table An5** with: $\tau_{av} = \tau_{av}$ *(web)* $h/(h-h_0)$
(c) Example of hole in web: 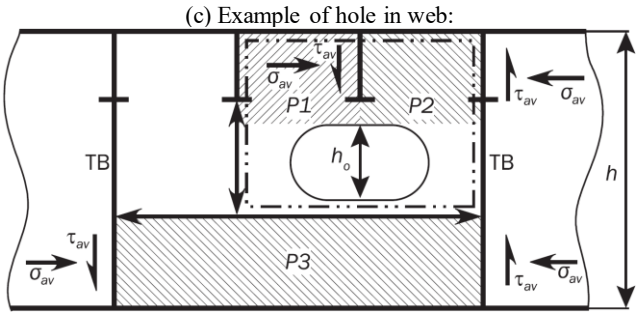		Panels $P1$ and $P2$ are to be evaluated in accordance with **(a)**. Panel $P3$ is to be evaluated in accordance with **(b)**.	

Where:

h : Height (m) of the web of the primary supporting member in way of the opening.

h_0: Height (m) of the opening measured in the depth of the web.

τ_{av} *(web)*: Weighted average shear stress (N/mm^2) over the web height h of the primary supporting member.

Note (1): Web panels to be considered for buckling in way of openings are shown shaded and numbered $P1$, $P2$, etc.

Note (2): For a PSM web panel with opening and without edge reinforcements as shown in configuration (a), the applicable

buckling assessment method depends on its specific boundary conditions. If one of the long edges along the face plate or along the attached plating is not subject to "inline support", i.e. the edge is free to pull in, Method B should be applied. In other cases, typically such as when the short plate edge is attached to the plate flanges, Method A is applicable.

Fig. An11 Web plate idealisation

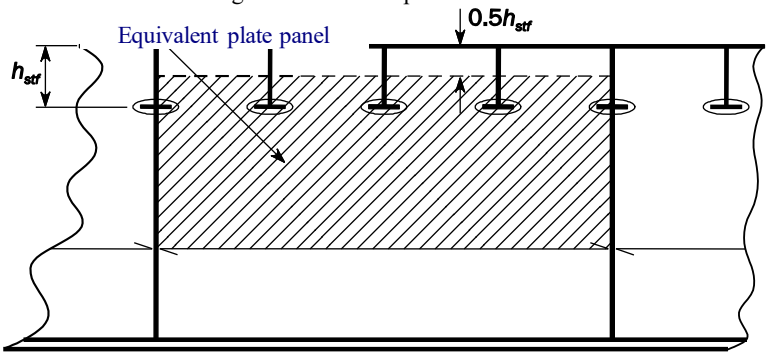

The correction of panel breadth is applicable also for other slot configurations provided that the web or collar plate is attached to at least one side of the passing stiffener.

An5.2.5 Stiffened Panels with U-type Stiffeners

An5.2.5.1 Local Plate Buckling

For stiffened panels with U-type stiffeners, local plate buckling is to be checked for each of the plate panels *EPP* b_1, b_2, b_f and h_w (see **Fig. An3**) separately as follows:

- The attached plate panels *EPP* b_1 and b_2 are to be assessed using SP-A model, where in the calculation of buckling factors K_x as defined in case 1 of **Table An5**, the correction factor F_{long} for U-type stiffeners as defined in **Table An4** is to be used; and in the calculation of K_y as defined in case 2 of **Table An5**, the F_{tran} for U-type stiffeners as defined in **An5.2.2.5** is to be used.
- The face plate and web plate panels *EPP* b_f and h_w are to be assessed using UP-B model with $F_{long} = 1$ and $F_{tran} = 1$.

An5.2.5.2 Overall Stiffened Panel Buckling and Stiffener Buckling

For a stiffened panel with U-type stiffeners, the overall buckling capacity and ultimate capacity of the stiffeners are to be checked with warping stress $\sigma_w = 0$, and with bending moment of inertia including effective width of attached plating being calculated based on the following assumptions:

- The two web panels of a U-type stiffener are to be taken as perpendicular to the attached plate with thickness equal to t_w and height equal to the distance between the attached plate and the face plate of the stiffener.
- Effective width of the attached plating, b_{eff}, taken as the sum of the b_{eff} calculated for the *EPP* b_1 and b_2 respectively according to SP-A model.
- Effective width of the attached plating of a stiffener without shear lag effect, b_{eff1}, taken as the sum of the b_{eff1} calculated for the *EPP* b_1 and b_2 respectively.

An5.3 Buckling Capacity of Column Structures

An5.3.1 Column Buckling of Corrugations

An5.3.1.1 Buckling Utilisation Factor

The column buckling utilisation factor, η, for axially compressed corrugations is to be taken as:

$$\eta_{column} = \frac{\sigma_{av}}{\sigma_{cr}}$$

Where:

σ_{av}:Average axial compressive stress (N/mm^2) in the member

σ_{cr}:Minimum critical buckling stress (N/mm^2) taken as:

$\sigma_{cr} = \sigma_E$ for $\sigma_E \leq 0.5\sigma_{Y_S}$

$\sigma_{cr} = \left(1 - \frac{\sigma_{Y_S}}{4\sigma_E}\right)\sigma_{Y_S}$ for $\sigma_E > 0.5\sigma_{Y_S}$

σ_E: Elastic column compressive buckling stress (N/mm^2) according to **An5.3.1.2**.

σ_{Y_S}:Specified minimum yield stress (N/mm^2) of the considered member. For built-up members, the lowest specified minimum yield stress is to be used.

An5.3.1.2 Elastic Column Buckling Stress

The elastic compressive column buckling stress, σ_E (N/mm^2) of members subject to axial compression is to be taken as:

$$\sigma_E = \pi^2 E f_{end} \frac{I}{A\ell_{pill}^2} 10^{-4}$$

Where:

I: Net moment of inertia (cm^4) about the weakest axis of the cross section

A: Net cross-sectional area (cm^2) of the member

ℓ_{pill}: Unsupported length (m) of the member

f_{end}: End constraint factor, corresponding to simply supported ends is to be applied except for fixed end support to be used in way of stool with width exceeding 2 times the depth of the corrugation, taken as:

- $f_{end} = 1.0$ where both ends are simply supported.
- $f_{end} = 2.0$ where one end is simply supported and the other end is fixed.
- $f_{end} = 4.0$ where both ends are fixed.

Appendix 14.6 STRESS BASED REFERENCE STRESSES

Symbols

a: Length (mm) of the longer side of the plate panel as defined in **An5**

b: Length (mm) of the shorter side of the plate panel as defined in **An5**

A_i: Area (mm^2) of the i-th plate element of the buckling panel

n: Number of plate elements in the buckling panel

σ_{xi}: Actual stress (N/mm^2) at the centroid of the i-th plate element in x direction, applied along the shorter edge of the buckling panel

σ_{yi}: Actual stress (N/mm^2) at the centroid of the i-th plate element in y direction, applied along the longer edge of the buckling panel

ψ: Edge stress ratio as defined in **An5**

τ_i: Actual membrane shear stress (N/mm^2) at the centroid of the i-th plate element of the buckling panel

1 Stress Based Method

1.1 Introduction

1.1.1

This section provides a method to determine stress distribution along edges of the considered buckling panel by second-order polynomial curve, by linear distribution using least square method and by weighted average approach. This method is called Stress based Method.

The reference stress is the stress components at centre of plate element transferred into the local system of the considered buckling panel.

1.1.2 Definition

A regular panel is a plate panel of rectangular shape. An irregular panel is plate panel which is not regular, as detailed in **An4.2.3.1**.

1.2 Stress Application

1.2.1 Regular Panel

The reference stresses are to be taken as defined in **2.1** for a regular panel when the following conditions are satisfied:

- At least, one plate element centre is located in each third part of the long edge a of a regular panel and
- This element centre is located at a distance in the panel local x direction not less than $a/4$ to at least one of the element centres in the adjacent third part of the panel.

Otherwise, the reference stresses are to be taken as defined in **2.2** for an irregular panel.

1.2.2 Irregular Panel and Curved Panel

The reference stresses of an irregular panel or of a curved panel are to be taken as defined in **2.2**.

2 Reference Stresses

2.1 Regular Panel

2.1.1 Longitudinal Stress

The longitudinal stress σ_x applied on the shorter edge of the buckling panel is to be calculated as follows:

- For plate buckling assessment, the distribution of $\sigma_x(x)$ is assumed as second order polynomial curve as:

  $$\sigma_x(x) = Cx^2 + Dx + E$$

  The best fitting curve $\sigma_x(x)$ is to be obtained by minimising the square error Π considering the area of each element as a weighting factor.

  $$\Pi = \sum_{i=1}^{n} A_i[\sigma_{xi} - (Cx^2 + Dx + E)]^2$$

  The unknown coefficients C, D and E must yield zero first derivatives, $\partial\Pi$ with respect to C, D and E, respectively.

$$\begin{cases} \dfrac{\partial \Pi}{\partial C} = 2\sum_{i=1}^{n} A_i x_i^2 \left[\sigma_{ix} - \left(C x_i^2 + D x_i + E\right)\right] = 0 \\ \dfrac{\partial \Pi}{\partial D} = 2\sum_{i=1}^{n} A_i x_i \left[\sigma_{ix} - \left(C x_i^2 + D x_i + E\right)\right] = 0 \\ \dfrac{\partial \Pi}{\partial E} = 2\sum_{i=1}^{n} A_i \left[\sigma_{ix} - \left(C x_i^2 + D x_i + E\right)\right] = 0 \end{cases}$$

The unknown coefficients C, D and E can be obtained by solving the 3 above equations.

$$\sigma_{x1} = \frac{1}{b}\int_0^b \sigma_x(x)dx = \frac{b^2}{3}C + \frac{b}{2}D + E$$

$$\sigma_{x2} = \frac{1}{b}\int_{a-b}^{a} \sigma_x(x)dx = \left(a^2 - ab + \frac{b^2}{3}\right)C + \left(a - \frac{b}{2}\right)D + E$$

If $-\frac{D}{2C} < \frac{b}{2}$ or $-\frac{D}{2C} > a - \frac{b}{2}$, σ_{x3} is to be ignored. Otherwise, σ_{x3} is taken as:

$$\sigma_{x3} = \frac{1}{b}\int_{x_{min}}^{x_{max}} \sigma_x(x)dx = \frac{b^2}{12}C - \frac{D^2}{4C} + E$$

Where:

$$x_{min} = -\frac{b}{2} - \frac{D}{2C}$$

$$x_{max} = \frac{b}{2} - \frac{D}{2C}$$

The longitudinal stress is to be taken as:

$$\sigma_x = max(\sigma_{x1}; \sigma_{x2}; \sigma_{x3})$$

The edge stress ratio is to be taken as:

$$\psi_x = 1$$

- For overall stiffened panel buckling and stiffener buckling assessments, the longitudinal stress σ_x applied on the shorter edge of the attached plate is to be taken as:

$$\sigma_x = \frac{\sum_{i=1}^{n} A_i \sigma_{xi}}{\sum_{i=1}^{n} A_i}$$

The edge stress ratio ψ_x for the stress σ_x is equal to 1.0.

2.1.2 Transverse Stress

The transverse stress σ_y applied along the longer edges of the buckling panel is to be calculated by extrapolation of the transverse stresses of all elements up to the shorter edges of the considered buckling panel.

The distribution of $\sigma_y(x)$ is assumed as straight line. Therefore:

$$\sigma_y(x) = A + Bx$$

The best fitting curve $\sigma_y(x)$ is to be obtained by the least square method minimising the square error Π considering area of each element as a weighting factor.

$$\Pi = \sum_{i=1}^{n} A_i \left[\sigma_{yi} - (A + Bx_i)\right]^2$$

The unknown coefficients A and B must yield zero first partial derivatives, $\partial \Pi$ with respect to A and B, respectively.

$$\frac{\partial \Pi}{\partial A} = 2\sum_{i=1}^{n} A_i \left[\sigma_{yi} - (A + Bx_i)\right] = 0$$

$$\frac{\partial \Pi}{\partial B} = 2\sum_{i=1}^{n} A_i x_i \left[\sigma_{yi} - (A + Bx_i)\right] = 0$$

The unknown coefficients A and B are obtained by solving the 2 above equations and are given as follow:

$$A = \frac{\left(\sum_{i=1}^{n} A_i \sigma_{yi}\right)\left(\sum_{i=1}^{n} A_i x_i^2\right) - \left(\sum_{i=1}^{n} A_i x_i\right)\left(\sum_{i=1}^{n} A_i x_i \sigma_{yi}\right)}{\left(\sum_{i=1}^{n} A_i\right)\left(\sum_{i=1}^{n} A_i x_i^2\right) - \left(\sum_{i=1}^{n} A_i x_i\right)^2}$$

$$B = \frac{\left(\sum_{i=1}^{n} A_i\right)\left(\sum_{i=1}^{n} A_i x_i \sigma_{yi}\right) - \left(\sum_{i=1}^{n} A_i x_i\right)\left(\sum_{i=1}^{n} A_i \sigma_{yi}\right)}{\left(\sum_{i=1}^{n} A_i\right)\left(\sum_{i=1}^{n} A_i x_i^2\right) - \left(\sum_{i=1}^{n} A_i x_i\right)^2}$$

The transverse stress is to be taken as:

σ_y=max(A, $A + Ba$)

The edge stress ratio is to be taken as:

$\psi_y = \frac{min(A, A+Ba)}{max(A, A+Ba)}$ for $\sigma_y > 0$

ψ_y=1 for $\sigma_y \leq 0$

2.1.3 Shear Stress

The shear stress τ is to be calculated using a weighted average approach and is to be taken as:

$$\tau = \frac{\sum_{i=1}^{n} A_i \tau_i}{\sum_{i=1}^{n} A_i}$$

Fig. 1 Buckling Panel

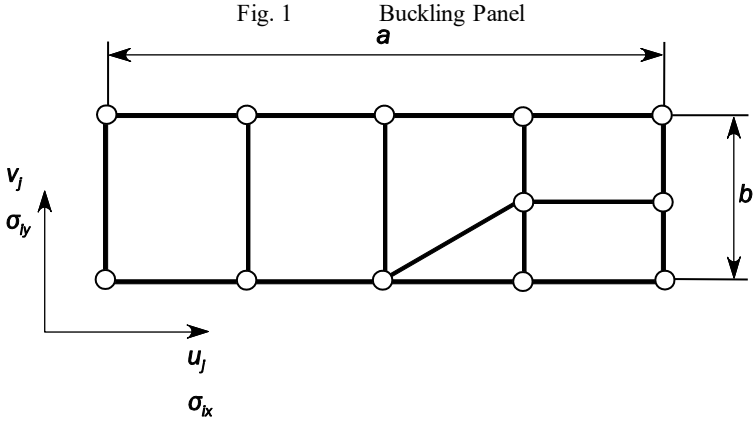

2.2 Irregular Panel and Curved Panel

2.2.1 Reference Stresses

The longitudinal, transverse and shear stresses are to be calculated using a weighted average approach. They are to be taken as:

$$\sigma_x = \frac{\sum_{i=1}^{n} A_i \sigma_{xi}}{\sum_{i=1}^{n} A_i}$$

$$\sigma_y = \frac{\sum_{i=1}^{n} A_i \sigma_{yi}}{\sum_{i=1}^{n} A_i}$$

$$\tau = \frac{\sum_{i=1}^{n} A_i \tau_i}{\sum_{i=1}^{n} A_i}$$

The edge stress ratios are to be taken as

$$\psi_x = 1$$

$$\psi_y = 1$$

Annex 14.16 GUIDANCE FOR DECISION OF ALTERNATIVE MEANS OF ACCESS

An1 General

An1.1 General

An1.1.1 Application

This Annex provides guidance for the selection of alternative means of access for compliance with **14.16.3**. This Annex also covers means of access used independently or in combination with provided permanent means of access to areas to be surveyed and measured in accordance with the Rules.

An1.1.2 Definitions

For the purpose of this Annex, definitions of terms are as specified in the following.

(1) "Approved" means that the construction and materials of the means of access and any attachment to the ship's structure is to be to the satisfaction of the Society. Compliance with the procedures in this Annex will satisfy the requirements of an administration in the absence of any specific instructions from a specific administration.

(2) "Acceptance" means that it is to be demonstrated to the satisfaction of the Owner that the equipment provided has been maintained and is, where applicable, provided with operators who are trained to use such equipment. This is to be demonstrated to the surveyors by the production of documents, prior to the equipment being used, which demonstrate that the equipment has been maintained and which indicate any limitations of the equipment.

(3) "Initial survey" means a survey carried out prior to the delivery of the ship. The means of access are to be subject to an initial survey and it is to be demonstrated that the means of access specified in plans required by **14.16.3.6** are obtainable.

(4) "Alternative means of access" are portable or movable means of access provided for the survey and thickness measurements of hull structure in areas otherwise not accessible by permanent means of access. For the purpose of this Annex, alternative means of access include supplementary or additional means to provide necessary access for surveys and thickness measurements in accordance with the requirements of **14.16.3**.

(5) "Portable means of access" are means that generally may be hand carried or arranged by the crew, e.g. ladders, small platforms and staging. Portable means specified as part of the Ship Structure Access Manual as specified in **14.16.3.6** are to be carried onboard the ship throughout the duration of the validity of the relevant access manual.

(6) "Movable means of access" may include devices like "cherry pickers", wire lift platforms, rafts or other means. Unless otherwise specified in **14.16.3.6**, such means need not necessarily be kept on board or be capable of being operated by the ship's crew. However arrangements for the provision of such means are to be addressed during survey planning. Movable means of access are to be included in the Ship Structure Access Manual as specified in 35.2.6, Part C of the Rules to designate the extent of access to the structural members to be surveyed and measured.

(7) "Authorized person" is a person specified by the Company who uses the means of access and that is to assume the role of inspector for checking the access arrangements for obvious damage prior to use. Whilst using the means of access, the inspector is to verify the condition of the sections used by close up examination of those sections and note any deterioration in the provisions. Should any damage or deterioration be found, the effect of such deterioration is to be assessed as to whether the damage or deterioration affects the safety for continued use of the means of access. Deterioration found that is considered to affect safe use is to be determined and measures are to be put in place to ensure that the affected section(s) is not to be further used prior to effective repair.

An1.2 General Provisions

An1.2.1 General

1 It is recognized that permanent means of access specified in **14.16.3** will not give access to all areas required to be surveyed and measured. Therefore, it is necessary that all areas outside of reach (i.e. normally beyond hand's reach) of the permanent means of access are to be accessed by alternative means in combination with the permanent means of access.

2 Means of access, including alternative means of access, specified in the Ship Structure Access Manual is to be approved by the

Society. For the selection of each means of access, refer to **An2**. Innovative means of access may be allowed, based on a case by case acceptance. Refer to **An2.2.7**.

3 When an alternative means of access is supplied by the builder for compliance with the requirements of **14.16.3**, such means of access is to comply with an appropriate safety standard such as recognized National or International Standards or equivalent. In this case, such means can be approved by the Society as part of the Ship Structure Access Manual. Any limitations to the use of the equipment at sea or in port are to be described in the approved Ship Structure Access Manual.

4 Where movable means of access are supplied by a shore-based provider, then the confirmation of its safe and adequate use is to be made by the Owner based on recorded maintenance and inspection regime by the provider of the equipment. Cognizance is to be taken of the complexity of the equipment when making the judgement on the periodicity of inspections and thoroughness of maintenance by the provider of equipment. The surveyor has the right to reject movable means of access if not satisfied with the documentation or condition of the equipment.

5 It is to be demonstrated as part of the initial survey, that the means of access identified in the Ship Structure Access Manual provides the required access, prior to delivery for the first ship in the series, or prior to initial use of a Ship Structure Access Manual where an existing means of access is amended, or a new means of access is added.

6 It is to be demonstrated by the Owner that the equipment provided has been maintained and a person operating the equipment is trained in the safe use of such equipment. These are to be demonstrated to the surveyors by the production of documents, prior to the equipment being used, which demonstrate that the equipment has been maintained and which indicate any limitations of the equipment.

7 The records of training, inspections and maintenance is to be established in accordance with requirements of the Ships Safety Management System.

8 All surveyors are to apply appropriately safe methods of working requirements. See also the relevant requiements of **1.4.2-1**, **Part B** for Access to Structures.

An2 Alternative Means of Access

An2.1 General

An2.1.1 General

The Owners are responsible for ensuring that alternative means of access are suitable for the purpose of the appropriate use. The equipment where applicable is to be operated by qualified personnel and evidence is to be provided that the equipment has been properly maintained by a shore-based provider. The standing platform is to be fitted with anchor points for attaching fall arrest systems. For equipment provided with a self levelling platform, care is to be taken that the locking device is engaged after completion of manoeuvring to ensure that the platform is fixed.

An2.2 Hydraulic Arm Vehicles (“Cherry Pickers”)

An2.2.1 Application

Hydraulic arm vehicles or aerial lifts (“Cherry Pickers”) may be used to enable the examination of the cargo hold structure on bulk carriers not accessible by permanent ladders fitted in accordance with **14.16.3.4-4(1)**. In the Ship Structural Access Manual, Cherry Pickers may be accepted as movable means, for use up to 17 *m* above the tank top.

An2.2.2 Safety Routines

1 Safety measures, including the following, are to be taken by an authorised person prior to survey to the satisfaction of the attending surveyor(s):

(1) Lift controls, including safety devices are to be serviceable and are to be operated throughout the range prior to use. Operators are to be trained.

(2) The operating range of the equipment is to be agreed with the operator before using the equipment.

(3) Operators are to work within the basket.

(4) Body belts (such as harnesses) with lanyards are to be used.

(5) Permissible load and reach limitations are not to be exceeded.

(6) Brakes are to be set; outriggers used, if so equipped; and wheels chocked; if on an incline.

(7) Unless designed otherwise, aerial lift trucks are not to be moved when the boom is elevated in a working position with workers in the basket.

(8) Upper and lower controls are to be required and are to be plainly marked. Lower controls are to be capable of overriding the upper controls.

(9) Special precautions are to be made to ensure that the vessel and the lifting device are stable when aerial lifts are used aboard other vessels (for example barges, floats).

(10) Personal flotation devices (*PFD*) are to be used when working over water.

(11) Caution is to be taken for potential crushing hazards (for example booming into the overhead, pinch point).

2 The operation and training in the use of this type of equipment is to be addressed by the Ships Safety Management System.

An2.3 Wire Lift Platform

An2.3.1 Application

1 Wire lift platforms may be used for inspection of structural members of ballast tanks, cargo oil tanks and cargo holds. Such equipment is to be rated for more than one person and be operated by suitably authorised personnel. If carried on board and included in the Ship Structure Access Manual, the designer will have to take into consideration safety aspects associated with deployment and use of such means of access. The platform and equipment, including fixed points to the ship's structure are to be approved on behalf of the Administration being based on a recognized International or National Standard.

2 The following is to be addressed for approval of the wire lift platform:

(1) Accidental loss of balance

(2) Protection against overload

(3) Secondary means of escape

(4) Guard rails

(5) Permissible loads

(6) Permanent markings of the loads

(7) Recovery in the event of power loss

An2.3.2 Safety Routines

1 Safety measures, including the following, are to be taken by an authorised person prior to survey to the satisfaction of the attending surveyor(s):

(1) Lift controls, including safety devices and brakes are to be serviceable and are to be operated throughout the range prior to use. Operators are to be trained.

(2) Rigging of wires is to be in accordance with manufacturer's recommendations and conducted by qualified personnel.

(3) Fix points to which the wires will be connected are to be examined before each use and verified as in good condition (free of wastage, fractures).

(4) Permissible load limitations are not to be exceeded.

(5) Personnel are to work from within the lift basket.

(6) Body belts (such as harnesses) with lanyards are to be used.

(7) Means are to be provided for using fall protection with a lifeline that can be tended from above the platform.

2 The maintenance of all equipment, the rigging of the equipment, its operation and training in use is to be addressed by the Ships Safety Management System.

An2.4 Portable Platforms

An2.4.1 Application

1 Portable platforms not more that 3 *m* in length may be used for access between longitudinal permanent means of access and the structural member to be accessed. (See **Fig. An1**) Handrails are to be provided, unless a safety harness is used in conjunction with the prearranged handgrips in way of the structure being accessed.

2 Portable platforms may be used as a portable means of access, provided that the platform and equipment, including fixed points to the ship's structure are specifically designed for the task and approved on behalf of the Administration based on a recognized International or National Standard.

3 Where portable platforms are included in the approved Ship Structure Access Manual, then the following is to be considered prior to approval:

(1) Permissible loads

(2) Permanent markings of the loads

(3) Fixing arrangements

(4) Guard rails

(5) Non skid construction

Fig. An1 Portable Platform

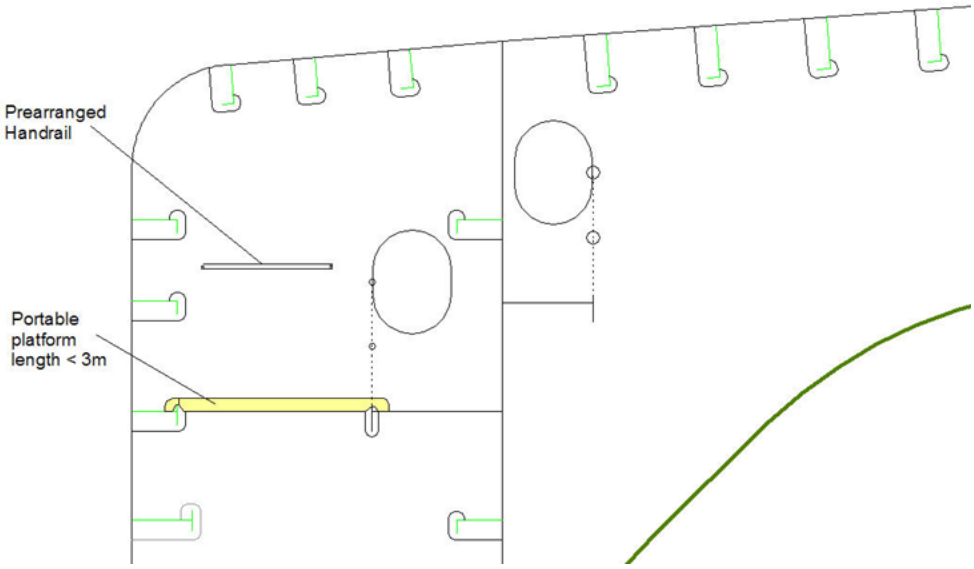

An2.4.2 Safety Routines

1 Safety measures are to be taken by the authorised person prior to survey to the satisfaction of the attending surveyor(s). This includes ensuring that portable platforms are safely secured and supported prior to use.

2 The maintenance of all equipment, the fixing of the equipment, its operation and training in its use are to be addressed by the Ships Safety Management System.

An2.5 Staging

An2.5.1 Application

1 Staging is the most common means of access provided especially where repairs or renewals are being carried out. Staging is generally an option for access to any structural members to be surveyed and measured in tanks, holds and spaces but is not considered as an alternative to permanent means of access as required in **14.16.3.4-1(1)(d)** and **-4(3)**. Staging not carried on board is not subject to approval as part of the means of access as specified in **14.16.3**. In this case, Owner and/or provider of equipment are responsible for ensuring safe use.

2 Where staging and the associated equipment including its attachments to the ship's structure are specifically designed for survey and thickness measurement in accordance with **14.16.3**, such staging is to be approved on behalf of the Administration based on a recognized International or National Standard and necessary consideration is taken for safe use.

An2.5.2 Safety Routines

1 Safety measures are to be taken by an authorised person prior to survey to the satisfaction of the attending surveyor(s). The following conditions are to be ensured before any work is commenced on or near any staging:

(1) For suspended scaffolds, a minimum of 6 evenly spaced suspension points – steel wire ropes or chains evenly spaced and as near vertical as possible are provided.

(2) Scaffold tubes are linked by right-angle couplers.

(3) An adequate working platform, fully boarded with toe boards and guard rails is provided. Platform transforms (at not greater than 1.2 *m* intervals) resting on ledgers (at not greater than 2.5 *m* intervals) and double transforms at platform board overlaps

(4) The staging is level and provided with safe access (such as ladders),

(5) The staging is adequately decked (for example have a work surface and platform), and provided with guardrails,

(6) The staging is adequate for the work performed taking into account that falls are significant hazard in site.

2 Where staging is approved as a part of the Ship Structure Access Manual and carried on board, the maintenance of all equipment, the rigging of the equipment, its operation and training in its use are to be addressed by the Ships Safety Management System.

An2.6 Rafting

An2.6.1 Application

1 Rafting is generally used as a term for surveys carried out by means of boats or rafts. Rafting may be an option for use in tanks, holds and spaces which may be filled with water provided the arrangement of the internal structure is as described here in **An2.6.1**.

2 When rafting is specified for use in the Ship Structure Safe Access Manual as movable means of access, inflatable rafts or boats, having satisfactory residual buoyancy and stability even if one chamber is ruptured, are to be used.

3 The structural arrangement is to allow easy escape to the deck from any position being rafted. At least 1.0 *m* clearance above and 0.5 *m* clearance beyond the breadth of the raft are to be allowed for safe passage past any internal obstructions.

4 For bulk cargo holds designed for filling with water (e.g. ballast holds) and where the water is permitted to be filled up to a height not less than 2 *m* below the top of side frames (e.g. air draft holds), rafting may be utilized in lieu of permanent means of access to side frames provided the structural capacity of the hold is sufficient to withstand static loads at all levels of water needed to survey the side shell frames. (See **14.16.3.4-4(3)** and **B1.4.2-4, Part B of the Guidance**)

5 Rafting of cargo oil tanks is subject to restrictions on discharging water in the harbour and weather conditions at voyage. Rafting as alternative means of access is to therefore not be considered as "readily accessible" in oil cargo tanks and do not provide an alternative to fitting longitudinal permanent means of access as required by **14.16.3.4-1(1)(d)**.

An2.6.2 Safety Routines

1 Safety measures, including the following, are to be taken by an authorised person prior to survey to the satisfaction of the attending surveyor(s):

(1) The surface of the water in the tank is to be calm (under all foreseeable conditions the expected rise of water within the tank is not to exceed 0.25 *m*) and the water level stationary. On no account should the level of the water be rising while the boat or raft is in use.

(2) Except where permanent means of access is provided in each bay to allow safe entry and exit in accordance with **14.16.3.4-10(4)(c) ii)**, at no time should the upside of the boat or raft be allowed to be within 1 *m* of the deepest under deck web face flat.

(3) The tank or space in which the boat or raft will be used are to contain clean ballast water only. When a thin sheen of oil on the water is observed, further testing of the atmosphere is to be done to ensure that the tank or space is safe for entering.

(4) If the tanks (or spaces) are connected by a common venting system, or inert gas system, the tank in which the boat or raft will be used is to be isolated to prevent a transfer of gas from other tanks (or spaces).

(5) Appropriate lifejackets is to be available for all participants.

(6) The boat or raft is to be tethered to the access ladder and an additional person is to be stationed down the access ladder with a clear view of the boat or raft.

(7) A communication system is to be arranged between the survey party in the tank or space being examined, the responsible officer on deck, the navigation bridge and the personnel in charge of handling the ballast pump(s) in the pump control room.

(8) Adequate and safe lighting are to be provided for the safe and efficient conduct of the survey.

2 It is responsibility of the Owners to provide a raft that meets the requirements of **An2.6.1**.

3 The organization for the surveys by means of rafting, its operation and training in use are to be addressed by the Ships Safety Management System.

An2.7 Portable Ladders

An2.7.1 Application

1 Portable ladders may be used for access to any structural members as supplementary and/or additional means to permanent means of access in accordance with **14.16.3** and are to be included in the Ship Structure Access Manual.

2 When specified for use in the Ship Structure Safe Access Manual as a portable means of access, such ladders are to comply with the following:

(1) Portable ladders are to be designed based on a recognized International or National Standard.

(2) Non-self supporting and self-supporting portable ladders not according to **(1)** above are to support at least four times the maximum intended load.

(3) The rungs and steps of portable ladders are to be designed to minimize slipping, e.g. corrugated, knurled, dimpled or coated with skid resistance material.

(4) Step ladders, hanging ladders and ladders more than 5 *m* long may only be utilized if fitted with a mechanical device to secure the upper end of the ladder.

(5) The manner is which portable ladders can most safely be used by workers is to be specified.

3 In accordance with **B1.4.2-10(3)(a), Part B of the Guidance**, portable ladders may be used for close-up surveys of the cargo hold shell frames of bulk carriers.

An2.7.2 Safety Routines

1 Safety measures, including the following, are to be taken by an authorised person prior to survey to the satisfaction of the attending surveyor(s):

(1) Portable ladders are to rest on a stable, strong, suitably sized, immobile footing so that the rungs remain horizontal. Suspended ladders are to be attached in a manner so that they can not be displaced and do not swing.

(2) The feet of portable ladders are to be prevented from slipping during use by securing the stiles at or near their upper and lower ends, by any anti-slip device or by other arrangements of equivalent effectiveness. Unless specified in the specifications of each portable ladder or relevant safety standards, the ladder is to be raised at an angle of around 70 degrees to the horizontal.

(3) Portable ladders are to be used only on the bottom or on a deep stringer platform so that the free falling height does not exceed 6 *m*. If it is necessary to exceed this height, there are to be at least 3 *m* of water above the highest structural element in the bottom to provide a "cushion" or a safety harnesses is to be used. The free falling height above the water surface are not to exceed 6 *m*.

(4) When climbing ladders in tanks containing water, the surveying personnel are to wear "flotation" aids. A flotation aid is a simple form of lifejacket which does not impede climbing or a self-inflatable lifejacket.

(5) Aluminium ladders may be used in cargo tanks, but can not be stored in the cargo area or other gas dangerous spaces.

(6) Ladders are to be maintained free of oil, grease and other slipping hazards.

2 The maintenance of all equipment, the securing of the equipment, its operation and training in use are to be addressed by the Ships Safety Management System.

An2.8 Innovative Approach

An2.8.1 General

1 Any proposal for innovative means of access is to be tested outside the requirements of **14.16.3** and is not to be accepted as meeting this regulation until accepted by the Society.

2 Where accepted by the Society, then the arrangements may be accepted as an alternative means of access provided that all the criteria from the trials are included into the design.

Contents

GUIDANCE FOR THE SURVEY AND CONSTRUCTION OF STEEL SHIPS 3
Part C HULL CONSTRUCTION AND EQUIPMENT 3
Part 1 GENERAL HULL REQUIREMENTS 3
C1 GENERAL 3
C1.2 Application 3
C2 GENERAL ARRANGEMENT DESIGN 4
C2.4 Structural Arrangements 4
C3 STRUCTURAL DESIGN PRINCIPLES 5
C3.4 Structural Detail Principles 5
C4 LOADS 7
C4.4 Loads to be Considered in Local Strength 7
C6 LOCAL STRENGTH 8
C6.4 Stiffeners 8
C7 STRENGTH OF PRIMARY SUPPORTING STRUCTURES 9
C7.2 Simple Girders 9
C8 STRENGTH ASSESSMENT BY CARGO HOLD ANALYSIS 10
C8.1 General 10
C8.2 Evaluation Area and Members to be Assessed 10
C8.3 Structural Model 10
C8.5 Boundary Conditions and Loads Conditions 11
C8.6 Strength Assessment 12
C9 FATIGUE 13
C9.1 General 13
C10 ADDITIONAL STRUCTURAL REQUIREMENTS 14
C10.2 Bottom Structure 14
C10.3 Side Structure 15
C10.4 Deck Structure 16
C10.5 Bulkhead Structure 19
C10.9 Tank Structures for Sloshing 20
C11 STRUCTURES OUTSIDE CARGO REGION 21
C11.3 Superstructure and Deckhouse 21
C11.4 Machinery Spaces 22
C11.5 Stern Structure 22
C12 WELDING 26
C12.2 Welded joints 26
C13 RUDDERS 28
C13.2 Rudders 28
C14 EQUIPMENT 41
C14.3 Anchors and Chain Cables 41

C14.4 Towing and Mooring Arrangement 44
C14.5 Equipment Numbers and Emergency Towing Arrangements 47
Appendix C1 REFERENCE DATA FOR DESIGN 51
Appendix C2 DETAIL GUIDE FOR PREPARATION OF LOADING MANUAL 54
Appendix C3 SAMPLE OF SHIP STRUCTURAL ACCESS MANUAL 70
Appendix C4 GUIDELINES FOR OWNERS/OPERATORS ON PREPARING EMERGENCY TOWING PROCEDURES (MSC.1/Circ.1255 ANNEX) 84
Appendix C5 PERFORMANCE STANDARD FOR PROTECTIVE COATINGS FOR DEDICATED SEAWATER BALLAST TANKS IN ALL TYPES OF SHIPS AND DOUBLE-SIDE SKIN SPACES OF BULK CARRIERS (Resolution MSC.215(82) and IACS Unified Interpretations SC223) 87
Appendix C6 PERFORMANCE STANDARD FOR PROTECTIVE COATINGS FOR CARGO OIL TANKS (Resolution MSC.288(87) and IACS Unified Interpretations SC259) 112

GUIDANCE FOR THE SURVEY AND CONSTRUCTION OF STEEL SHIPS

Part C HULL CONSTRUCTION AND EQUIPMENT

Part 1 GENERAL HULL REQUIREMENTS

C1 GENERAL

C1.2 Application

C1.2.2 Requirements

C1.2.2.4 Application of Strength Assessment Criteria to Primary Supporting Structures

Where strength assessments are carried out in the flooded condition, the following **(1)** to **(3)** evaluation methods are considered to be standard:

(1) For reciprocal-type bulkhead structures, **Chapter 8, Part C of the Rules** is to be applied.

(2) For bulkhead structures supported solely by stiffeners, neither **Chapter 7** nor **Chapter 8, Part C of the Rules** are to be applied.

(3) For bulkhead structures excluding **(1)** and **(2)** above (e.g. corrugated bulkheads) and where **Chapter 8, Part C of the Rules** is not applied, relevant requirements in **Chapter 7, Part C of the Rules** need be applied.

Fig. C1.2.2-1 Example of Bulkhead Structures

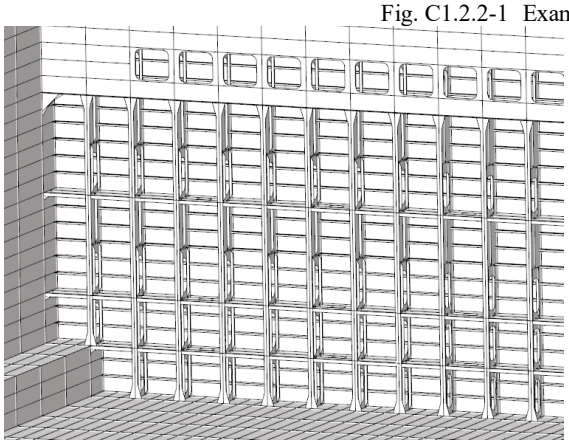

(a) Reciprocal-type bulkhead structure

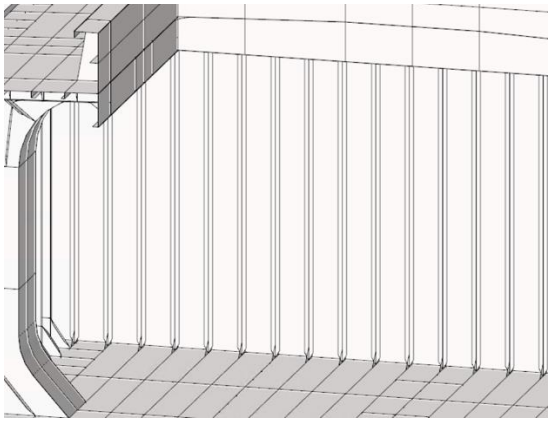

(b) Bulkhead structure supported solely by stiffeners

C2 GENERAL ARRANGEMENT DESIGN

C2.4 Structural Arrangements

C2.4.1 Bottom Structures

C2.4.1.4 Single Bottom

The standard structures of single bottoms of ships whose double bottom is omitted partially or wholly are to be in accordance with the following requirements.

(1) Centre girder

(a) All single bottom ships are to have girders composed of centre girder and face plates, and the girders are to extend as far forward and afterward as practicable.

(b) The centre girder is to extend to the top of floors.

(2) Side girders

(a) All single bottom ships are to have girders composed of side girders and face plates, and the girders are to extend as far forward and afterward as practicable.

(b) Side girders are to be so arranged at an appropriate spacing between the centre girder and the lower turn of bilge.

(3) Floors

(a) Upper edges of floors at any part are not to be below the level of the upper edges at the centre line.

(b) Floors under engines and thrust seats are to be of ample depth and to be specially strengthened. Their thickness is not to be less than that of the continuous centre girder.

(c) In ships having an unusually large rise in the floor, the depth of floors at the centre line is to be suitably increased.

(d) Limber holes are to be provided in all floors on each side of the centre line and, in addition, at the lower turn of the bilge in ships having flat bottoms.

(e) Face plates fitted up to the upper edge of floors, are to be continuous from the upper part of the bilge at one side to the upper part of the bilge at the opposite side in case of curved floors, or to be continuous floor plate in case of bracketed floors.

C3 STRUCTURAL DESIGN PRINCIPLES

C3.4 Structural Detail Principles

C3.4.1 General Principles

C3.4.1.1 Structural Continuity

Where the heights of adjacent double bottoms are different, the recommendation is to maintain the continuity of strength either by using a slope to gradually annul the height difference or by extending the inner bottom plate of the lower of the two bottoms so it is overlapped by the other.

C3.4.2 Stiffeners

C3.4.2.1 General

One-and-a-half times the breadth of the strut face plate is the standard amount that a strut laps the web of a longitudinal. Where a sufficient lap is unable to be obtained due to welding issues, the throat of the fillet weld is to be properly increased.

An example of strut face plates that are snipped is shown in **Fig. C3.4.2-1**.

Fig. C3.4.2-1 Connection between Struts and Bottom Longitudinals

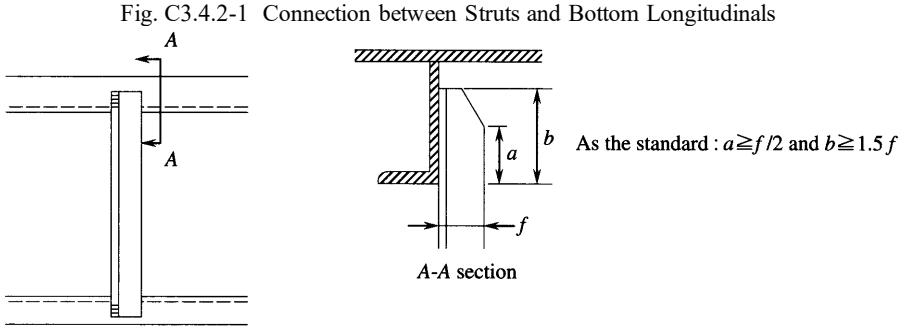

C3.4.5 Openings

C3.4.5.1 Slots

For slots through which a stiffener is to be passed, it is standard to provide a collar plate in the following locations, as applicable:

(1) Where the shear force is particularly large at the ships sides

(2) Locations that are subjected to block pressure at docking of the ship

(3) Toes of end brackets for primary supporting members

(4) Where a slot is located close to an opening such as a manhole or lightening hole

(5) Where the flanges of longitudinal stiffeners face each other

(6) Where slots are provided at small intervals, as is often the case with the bilge part

Fig. C3.4.5-1 Typical Locations for Providing Collar Plates

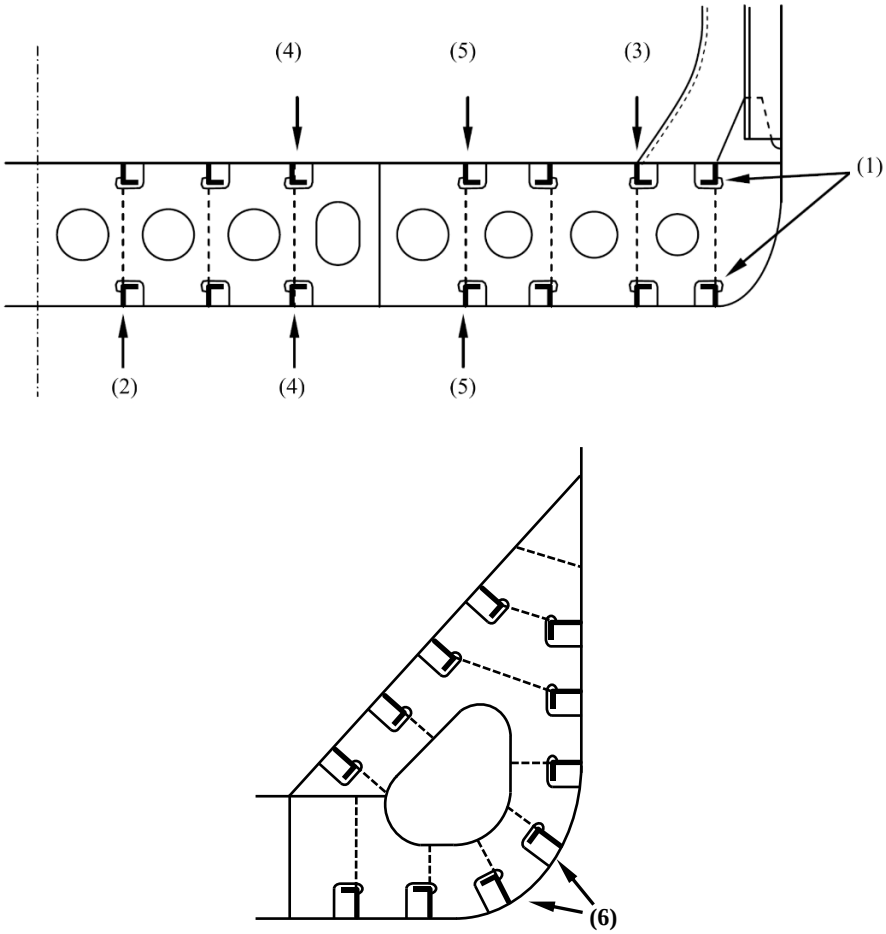

C4 LOADS

C4.4 Loads to be Considered in Local Strength

C4.4.3 Testing Condition

C4.4.3.1 External Pressure

In the application of **4.4.3.1, Part C of the Rules**, it may be assumed that the external pressure is 0 or a draught less than that of Case 1 (i.e. a value set with some margin to the minimum draught in the test plans of existing ships) in cases where the information for Case 1 cannot be obtained beforehand.

C6 LOCAL STRENGTH

C6.4 Stiffeners

C6.4.1 General

C6.4.1.3 Additional Stresses on Stiffeners Due to Causes such as Displacement of Girders

Where the value obtained from the following formula is not less than 1.6, it is recommended to give special consideration to stiffeners on the shell side or bulkhead side around the mid-span of girders because of added stress due to forced deflection:

$$\frac{I_b \ell_t^{\,4}}{I_t s \ell_b} \times 10^3$$

I_b: Moment of inertia (cm^4) of stiffener

I_t: Moment of inertia (cm^4) of girder

ℓ_b: Span (m) of stiffener

ℓ_t: Span (m) of girder

s: Spacing (mm) of stiffeners

C7 STRENGTH OF PRIMARY SUPPORTING STRUCTURES

C7.2 Simple Girders

C7.2.6 Bending Stiffness

C7.2.6.2 Moment of Inertia of Girders

For the stiffeners supported by girders, **7.2.6.2, Part C of the Rules** need not be applied in cases where the hot spot stress, including stress due to relative displacement, specified in **9.3.5, Part C of the Rules** (*See* **9.3.2, Part C of the Rules**) is considered and the fatigue strength assessment required by **9.5, Part C of the Rules** is satisfactory.

C8 STRENGTH ASSESSMENT BY CARGO HOLD ANALYSIS

C8.1 General

C8.1.3 Other General Requirements

C8.1.3.3 Alternative Methods

Where **8.1.3.3, Part C of the Rules** are applied, **"Guidelines for Direct Load Analysis and Strength Assessment"** published separately by the Society is to be applied.

C8.2 Evaluation Area and Members to be Assessed

C8.2.1 Evaluation Area

C8.2.1.1 Evaluation Area and Target Holds

1 In the selection of the target holds as specified in the **8.2.1.1, Part C of the Rules**, the effect of the loads of the following **(1)** to **(5)** and their combinations is to be considered.

(1) Still water vertical bending moment and wave-induced vertical bending moment

(2) Pitch and roll

(3) Longitudinal, transverse and vertical acceleration acting on the volumetric centre of gravity of the cargo holds

(4) Hydrodynamic pressure

(5) Other loads as deemed necessary by the Society

2 Where a cargo hold in other than the midship part has the significantly different type of construction compared to the target hold, finite element analysis based upon a model reproducing the structure appropriately may be required.

C8.2.2 Members to be Assessed

C8.2.2.2 Members to be Assessed in Flooded Condition

Watertight bulkhead structures for which the differences between internal and external pressures are small (e.g. longitudinal bulkheads and girder members that constitute double side structures) need not be assessed.

C8.3 Structural Model

C8.3.1 Extent of Model and Members to be Assessed

C8.3.1.1 Extent of Model

1 Modelling in accordance with the following **(1)** and **(2)** is recommended where **8.3.1.1-4, Part C of the Rules** is applied. This requirement is to be applied provided that the boundary conditions specified in **8.5.1.2-2, Part C of the Rules** are applied.

(1) Where the foremost cargo hold is selected as the target hold, the outer shell from the aft end of the adjacent cargo hold to the fore end of the ship is reproduced in the model so as to properly reproduce the vertical bending moment, etc. due to lateral loads such as external pressure. Modelling of other members may be simplified or omitted as far as it does not affect the structural response of the target hold. However, mass elements and shear loads are to be added appropriately so as to reproduce the vertical bending moment act on the target hold due to weight distribution in the bow structure.

(2) Where the aftmost cargo hold is selected as the target hold, the outer shell from the fore end of the adjacent cargo hold to the aft end of the ship is reproduced in the model for the same reason as **(1)** above. Modelling of other members may be simplified or omitted as far as it does not affect the structural response of the target hold. However, mass elements and shear loads are to be added appropriately so as to reproduce the vertical bending moment, etc. act on the target hold due to weight distribution at the region abaft of the target hold can be reproduced.

2 Where a cargo hold other than the foremost and aftmost cargo hold is selected as the target hold and the regions adjacent to the target hold are not cargo hold such as the machinery space or bow structure, the extent of model and the members to be modelled are to be determined and it is to be discussed with the Society beforehand for the approval.

C8.3.1.2 Members to be Modelled

1 Where a transverse bulkhead structure is provided in the fore and aft ends of the model, the structure is to be modelled.

2 Where a web frame is provided in the fore and aft ends of the model, the structure is to be modelled.

C8.3.3 Meshing and Related Issues

C8.3.3.1 General

1 Non continuous stiffeners may be modelled as continuous stiffeners, i.e. the reduction of the web height in way of the snip end are not to be modelled.

2 Where the web stiffeners of primary supporting members are not in line with the finite element mesh, it is sufficient to place the line elements along the nearby nodal points provided that the distance is adjusted as much as possible.

3 Buckling stiffeners attached to deck transverse girders and stringers, which is attached parallelly to the flange of the members and buckling stiffeners attached to large brackets are to be modelled using rod elements.

C8.3.3.3 Modelling of Brackets

1 In modelling the curvature of the free edge on large brackets forming a part of primary supporting structures, in principle, the same mesh size as the stiffener spacing is to be used.

2 The bracket toe is to be terminated at the nearest nodal point provided that the modelled length of the bracket arm does not exceed the actual bracket arm length. In modelling a small member that is not connected to the member which the bracket reaches, such as the flange of the bracket, the modelling is to be performed so that those members are not connected.

3 In principle, tripping brackets may not be modelled even where brackets have the size with the typical mesh size or greater.

C8.3.3.5 Local Models

1 In the application of the **8.3.3.5, Part C of the Rules**, the region to be modelled by a fine mesh is to be determined so as to obtain the appropriate structural response in the assessment target region of the local model. The boundary of the local model is to coincide with the primary supporting member of the model reproducing the cargo hold.

2 In the application of the **8.3.3.5-3, Part C of the Rules**, nodal displacements obtained from the analysis results using the structural model reproducing the cargo hold is to be applied to the nodes at the boundary of the local model. Where the nodes the boundary nodal points of the local model are not in agreement with the corresponding nodal points of the model reproducing the cargo hold, it is acceptable to impose prescribed displacement on these nodes using multi-point constraints.

C8.5 Boundary Conditions and Loads Conditions

C8.5.1 Boundary Conditions

C8.5.1.1 Boundary Conditions for Testing Condition

In the application of **8.5.1.2, Part C of the Rules**, where a hydrostatic test is carried out in dry dock and the reaction forces by the blocks acts on the hull structure, it is recommended that boundary conditions that can take the effect of the reaction into account are applied.

C8.5.2 Loads Conditions

C8.5.2.1 Dynamic Component of Hull Weight due to Ship Motions

In the application of **8.5.2.2-4, Part C of the Rules**, it is acceptable to apply acceleration at the centre of gravity of the ship in the loading condition under consideration for the dynamic component of hull weight due to ship motions. **Fig. 8.5.1-1** shows an example.

C8.5.2.2 Method to Apply Moment to Structural Model

1 In the application of **8.5.2.2-5, Part C of the Rules**, stresses in the transverse direction or the vertical direction due to Poisson's effect are to be considered appropriately where the method of superposition of stresses obtained from the hull girder loads based upon beam theory (indirect method) is used. In principle, 10% of the stress generated in the ship's longitudinal direction is to be considered as additional stress in the transverse direction or the vertical direction.

2 For cargo holds located other than in the midship part, the adjusting moment may be omitted considering the characteristics of cargo hold structure and loads act on the structure and features of the reproduced structural model.

Fig. 8.5.1-1 An Example of Dynamic Component of Hull Weight due to Ship Motions

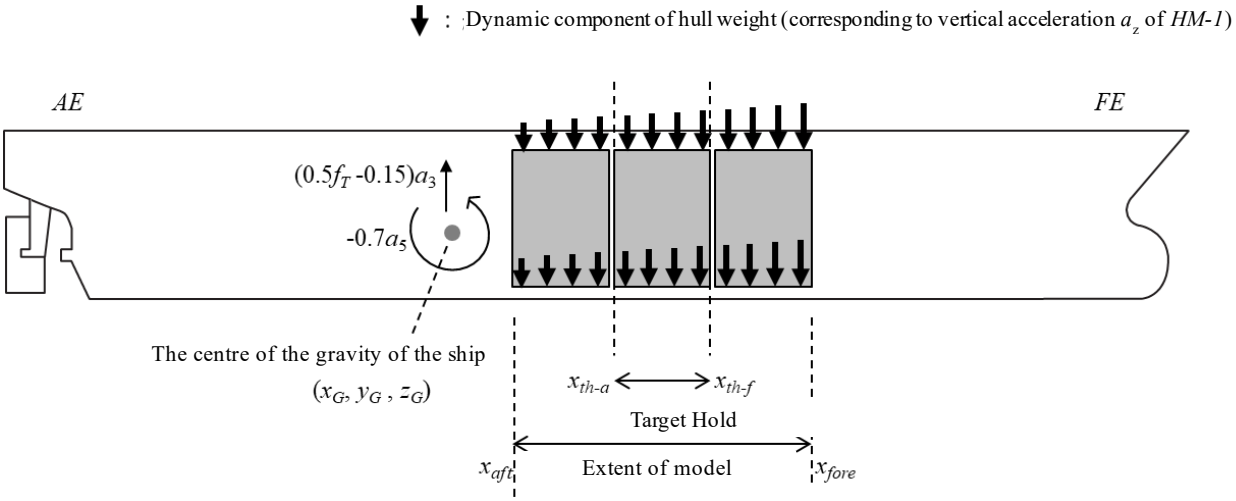

C8.6 Strength Assessment

C8.6.2 Buckling Strength Assessment

C8.6.2.1 Buckling Strength Assessment Criteria

In the application of the **8.6.2.1-2, Part C of the Rules**, sufficient structural redundancy of the members to be assessed and their surrounding structures can be verified based on a non-linear structural analysis using a model reproducing the equivalent region specified in the **8.3.1.1, Part C of the Rules**.

C9 FATIGUE

C9.1 General

C9.1.2 Application of Fatigue Strength Assessment

C9.1.2.2 Application

"Ships for which fatigue strength assessment is deemed necessary by the Society" specified in **9.1.2.2-1(3), Part C of the Rules** include those that opt to perform strength assessment by the cargo hold analysis specified in **Chapter 8, Part C of the Rules** in accordance with **1.2.2.4, Part C of the Rules**. In such cases, however, only the assessments specified in **9.3.1.2(2), Part C of the Rules** need be performed.

C10 ADDITIONAL STRUCTURAL REQUIREMENTS

C10.2 Bottom Structure

C10.2.2 Girders and Floors

C10.2.2.1 Reinforcement for Docking

The thickness and shape of the docking brackets as provided in **10.2.2.1-2, Part C of the Rules** are to be determined considering buckling strength depending on the height of the centre girder. **Fig. C10.2.2-1** shows examples of the docking bracket for reference.

Fig. C10.2.2-1 Forms of Docking Brackets

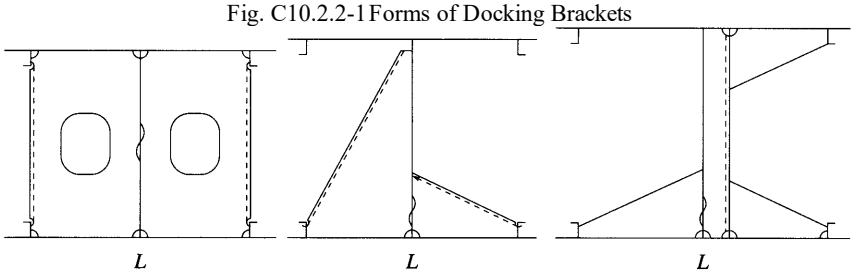

C10.2.3 Bottom Shell Plating

C10.2.3.2 Bilge Keels

1 The following **(1)** and **(2)** are recommended as the construction of the bilge keel end.

(1) Bilge keel ends are to be not less than 50 *mm* and not greater than 100 *mm* from pad plate ends.

(2) Bilge keel ends are to be suitably tapered and rounded.

2 The following **(1)** and **(2)** are recommended as the supporting structure of the bilge keel end.

(1) Where the bilge keel end is supported by a transverse member, the transverse member is to be located at an intermediate point between the bilge keel end and the pad plate edge as far as practicable. (*See* **Fig. C10.2.3-1**)

(2) Where the bilge keel end is supported by a longitudinal stiffener, the longitudinal stiffener is to be extended at least to the transverse member closest to forward and aft of the zone *A*. (*See* **Fig. C10.2.3-2**)

Fig. C10.2.3-1 Example of Supporting Structure of Bilge Keel End by Transverse Member

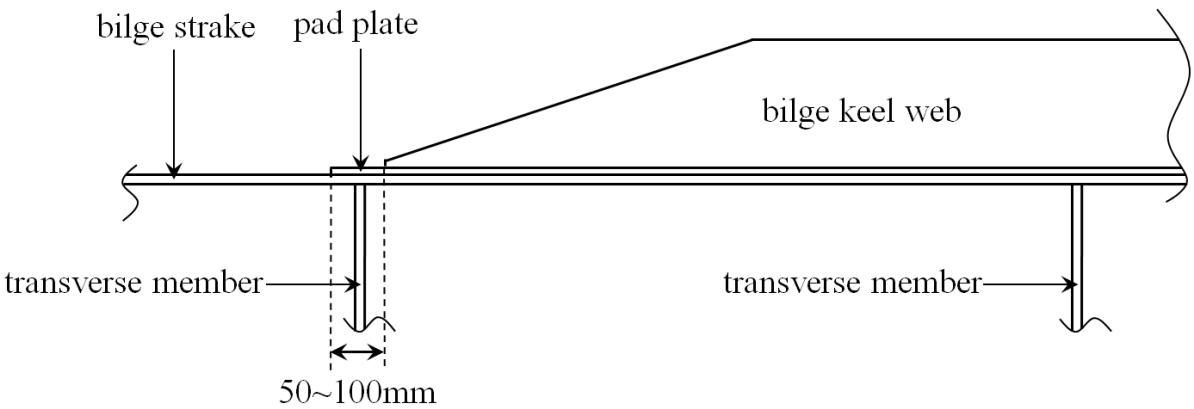

Fig. C10.2.3-2 Example of Supporting Structure of Bilge Keel End by Longitudinal Stiffener

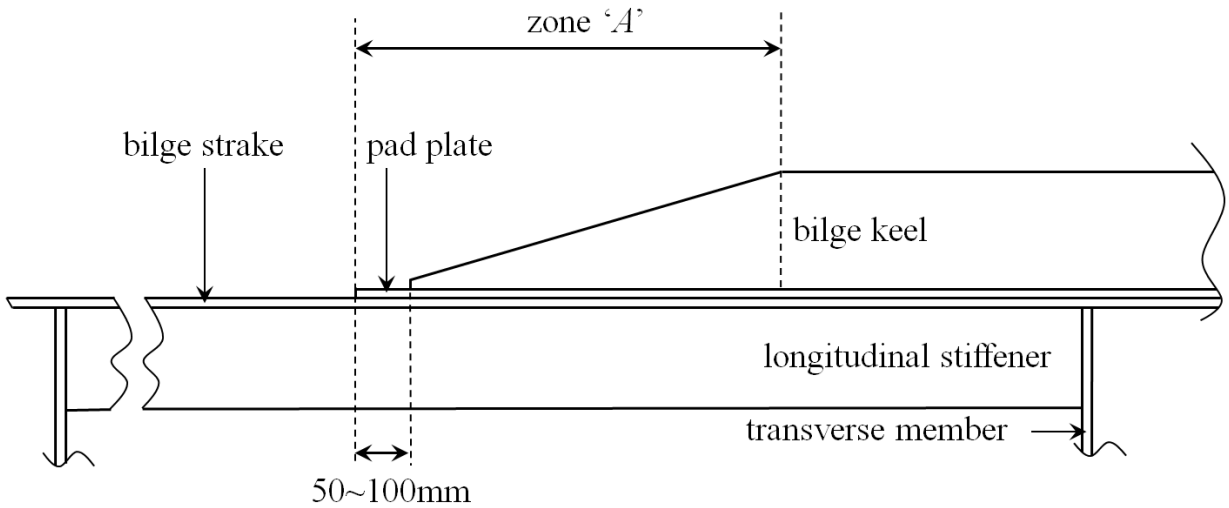

C10.3 Side Structure

C10.3.2 Cantilever Beam Systems

C10.3.2.2 Connection of Cantilever Beams to Web Frames

1 To prevent the buckling of end brackets of cantilever beams connected to web frames, stiffeners are to be fitted to brackets, with suitable spacing, in order to keep their panels small, as shown in **Fig. C10.3.2-1**.

2 Within the range of 1/2 of the throat depth of the end bracket from the side of the face plate, stiffeners such as inverted angles are to be arranged in the direction of compression at the spacing obtained from the following formula. This spacing is deemed as the standard.

$s_1 = 35t$

s_1: Spacing (mm) of stiffeners (*See* **Fig. C10.3.2-1**)

t: Thickness (mm) of brackets

Fig. C10.3.2-1 Reinforcement of Brackets

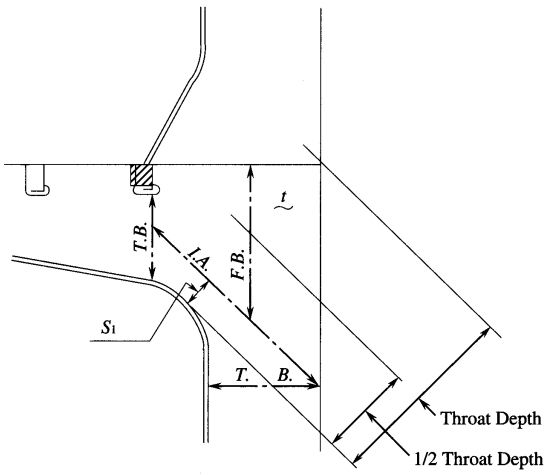

C10.3.5 Side Shell Plating

C10.3.5.1 Sheer Strakes for Midship Part

Sheer strakes are to be paid attention to the following **(1)** to **(4)**:

(1) The upper edges of sheer strakes are to be properly smoothed.

(2) Bulwarks are not to be welded to sheer strakes in the range of $0.6L_C$ amidships. Furthermore, fixtures such as eye plates are

not to be directly welded on the upper edge of sheer strakes, except in the fore and aft end parts.

(3) Special care is to be taken where fixtures, gutter bars ends, etc. are directly welded on to the outer face of the curved parts of rounded gunwales.

(4) At least for $0.6L_C$ amidships, the standard manner of welding construction of ***T***-type joints between sheer strakes and stringer plates is to be as shown below. However, where the thickness of stringer plates is less than 13 mm, fillet welds of F_1 grade may be acceptable without edge preparation. (*See* **Fig. C10.3.5-1**)

Fig. C10.3.5-1 Welded Joint Configuration of ***T***-type Joint between Sheer Strakes and Stringer Plates

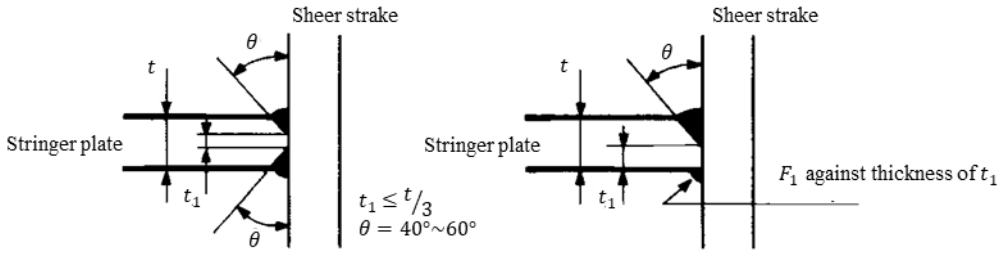

C10.3.6 Arrangements to Resist Panting Abaft of Collision Bulkhead and Forward of the Fore End of the Machinery Space Bulkhead

C10.3.6.1

It is recommended to provide side stringers in line with stringer plates or on side stringers in way of the fore peak tank in association with web frames provided at suitable intervals between the collision bulkhead and $0.15L_C$ from the fore end.

C10.4 Deck Structure

C10.4.1 Camber of Weather Deck

C10.4.1.1

The standard camber of the weather deck is $B/50$ at midship.

C10.4.2 Deck Longitudinals and Deck Beams

C10.4.2.1 Deck Longitudinals

The connection method of the ends of longitudinal beams shown in **Fig. C10.4.2-1** is standard.

Fig. C10.4.2-1

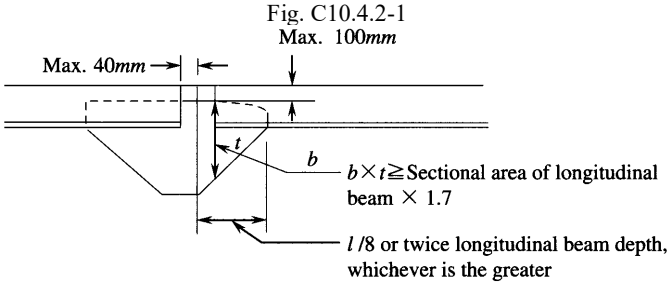

C10.4.2.2 Deck Beams

The connection method of deck beams by means of brackets shown in **Fig. C10.4.2-2** is standard.

Fig. C10.4.2-2

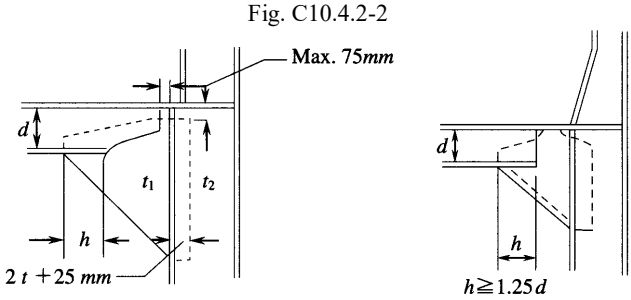

$h \geqq 1.5 \times$ width of free flange for inverted angles
$h \geqq 75$ *mm* for bulb plates
$t = t_1$ or t_2, whichever is the smaller

C10.4.3 Deck Girders and Deck Transverses

C10.4.3.1 Construction

1 Deck transverses supporting the deck longitudinals are to be arranged at the sections where floors are provided as far as practicable.

2 Tripping brackets are to be provided on girders at the points subjected to stress concentration, such as the upper and lower end of pillars. Slots in the girders are to be provided with collars. Under the end bulkheads of superstructures, only collars are required. Collars are also to be fitted at the slots near the toes of end brackets.

3 Butt welded joints of girder web are to be away from slots. Butt joints of face plates are to be away from knuckled parts. The depth of slots is not to exceed 0.4 d_G. If this limit is exceeded, collars are to be fitted. This depth is not to exceed 0.5 d_G. These requirements may be suitably modified for superstructures. Here, d_G means depth of girder

C10.4.3.2 End Connections

For continuity of the deck girders, the standard depth of a bracket is twice the depth of a web. If the depth of the bracket is smaller than this standard, suitable equivalent means, such as attaching a gusset plate, is to be provided. (*See* **Fig. C10.4.3-1**)

Fig. C10.4.3-1

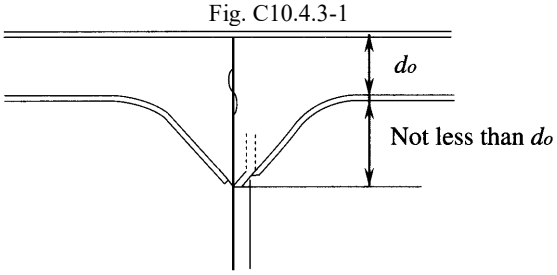

C10.4.4 Decks

C10.4.4.1 General

A transverse framing system is to be used for the cross deck as far as practicable. (*See* **Fig. C10.4.4-1**)

Fig. C10.4.4-1

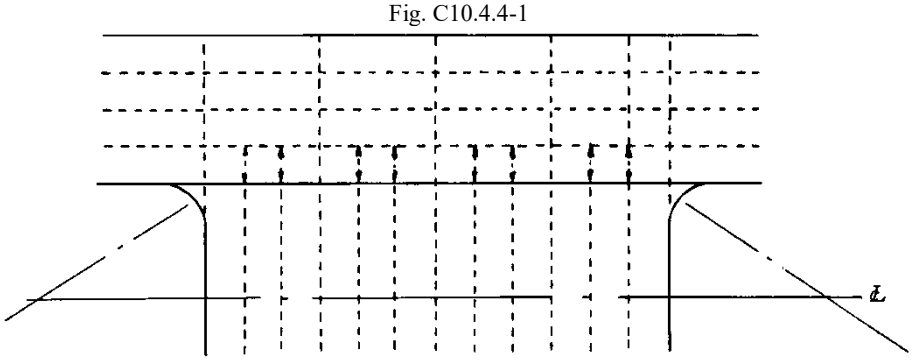

C10.4.4.4 Compensation for Openings

1 The following values are to be used as the minimum radius of the all corners as the standard. The radius may be suitably reduced for small openings. For companionways and similar small openings, the radius at the corners may be 150 *mm* in the strength deck outside the line of openings and 75 *mm* or so elsewhere.

Strength deck within $0.5L_C$ amidship: 250 *mm*

Elsewhere: 200 *mm*

2 Doubling plates or thicker plates are not required where the corner radius is not less than 600 *mm* or the corners of the opening have a parabolic or similar shape. As an example, it is recommended to use the shape shown in **Fig. C10.4.4-2**.

Fig. C10.4.4-2

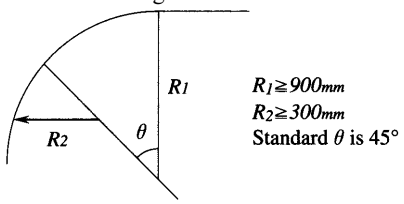

3 Where an attachment such as a slant plate or protective member as specified in **10.4.4.4-3, Part C of the Rules** is provided, such attachments are to be provided as referred to the method shown in **Fig. C10.4.4-3** and **Fig. C10.4.4-4**.

Fig. C10.4.4-3 Example of the Method for Providing Slant Plates

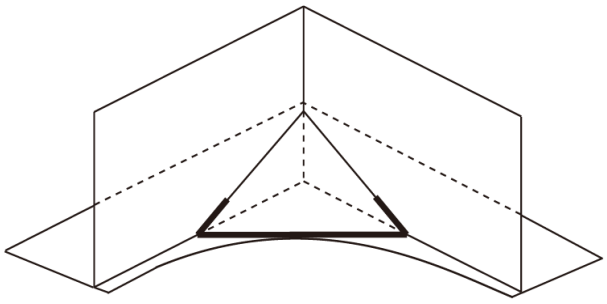

(Note)
The connections between slant plates and strength deck (indicated in the bold line) are not to be welded.

Fig. C10.4.4-4 Example of the Method for Providing Protective Means

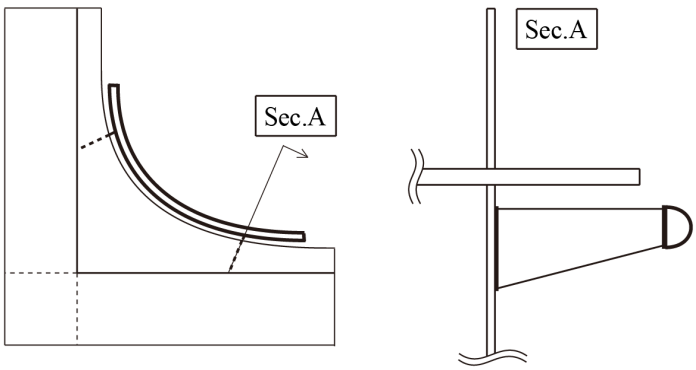

(Note)
Protective means (i.e. half round bars) are to be provided on hatch side girders and hatch end beams.

C10.4.5 Pillars

C10.4.5.2 Pillars in Holds

The reinforcement under pillars is to be as shown in **Fig. C10.4.5-1**.

Fig. C10.4.5-1

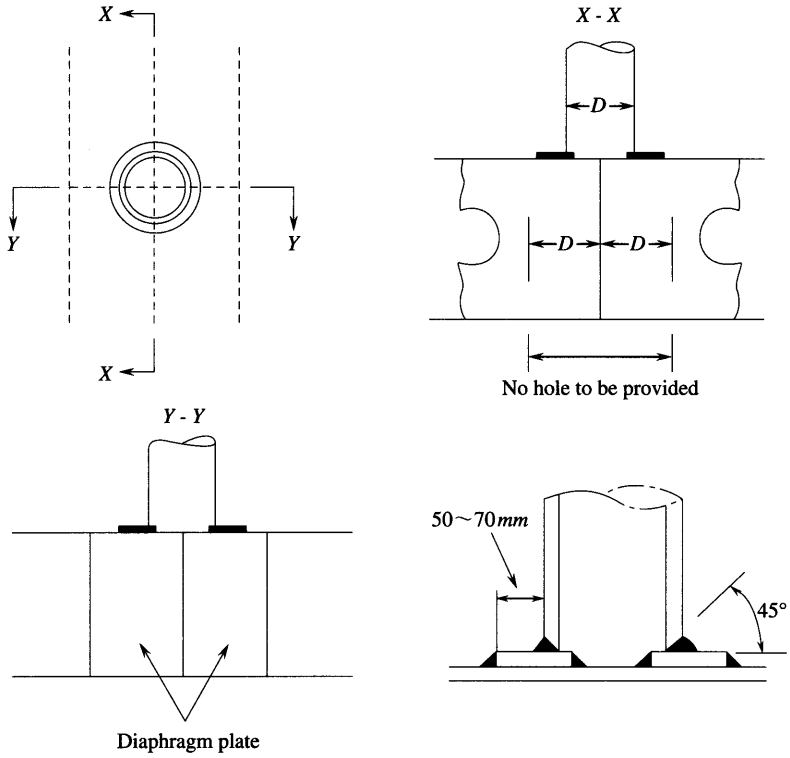

C10.5 Bulkhead Structure

C10.5.1 Construction of Watertight Bulkheads

C10.5.1.4 Plane Bulkheads

1 The dimensions of brackets of bulkhead stiffeners are to be as shown in **Fig. C10.5.1-1**.

Fig. C10.5.1-1

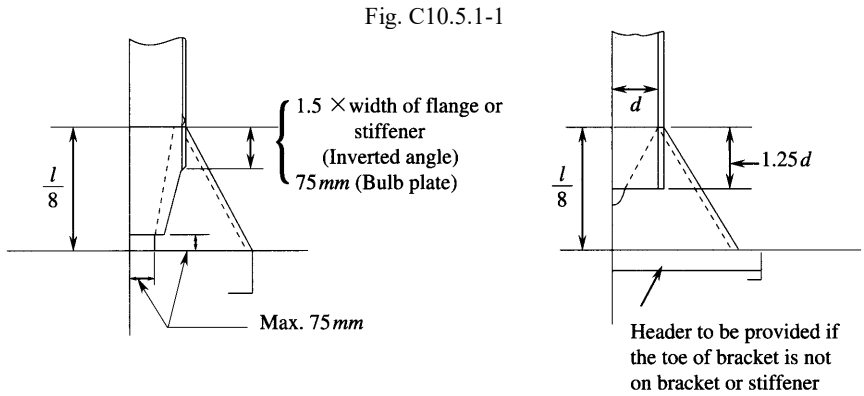

2 Where the deck is terminated at the position of the bulkhead, the stiffeners are to have ribs at the level of the deck. (*See* **Fig. C10.5.1-2**)

Fig. C10.5.1-2

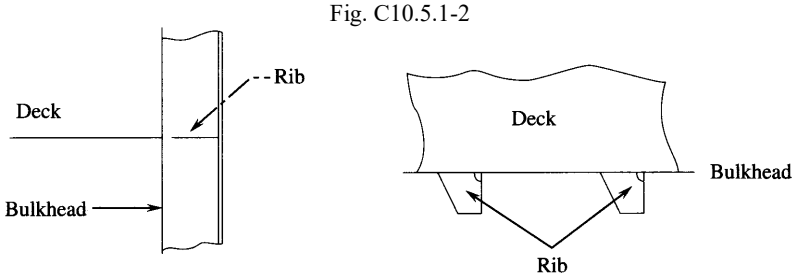

C10.9 Tank Structures for Sloshing

C10.9.1 General

C10.9.1.1 Application

It is recommended that the design of tank structure satisfy the following **(1)** and **(2)**.

(1) The period of longitudinal oscillation of liquid cargo tanks is not within the range of ±20 % of pitch period and not within ±1.5 *seconds* from the same period.

(2) The period of transverse oscillation of liquid cargo tanks is not within the range of ±20 % of roll period and not within ±1.5 *seconds* from the same period.

C11 STRUCTURES OUTSIDE CARGO REGION

C11.3 Superstructure and Deckhouse

C11.3.2 Superstructure

C11.3.2.5 Compensation at Ends of Superstructure

The construction of the superstructure end is to be as shown in **Fig. C11.3.2-1** and **Fig. C11.3.2-2**.

(1) The side shell plating of the superstructure is to be adequately extended beyond the superstructure end, and an adequate corner radius is to be provided at the end ($R \geq 900\,mm$).

(2) The butt joint of the sheer strake on the strength deck is to be located at least 150 mm from the end of the corner radius.

(3) The thickness increase of the shell plating within 0.4 L is to be as shown in **Fig. C11.3.2-1** and **Fig. C11.3.2-2** (the thickness increase when an expansion joint is not installed is to be the same as that when an expansion joint is installed), is to be 0 in the region 0.2 L from the fore and aft ends of the ship and is to be the value obtained by linear interpolation at the intermediate points.

(4) The thickness increase of the shell plating is not required in the case of a set-in type superstructure.

Fig. C11.3.2-1 Construction of Superstructure End (Where Expansion Joint is Installed)

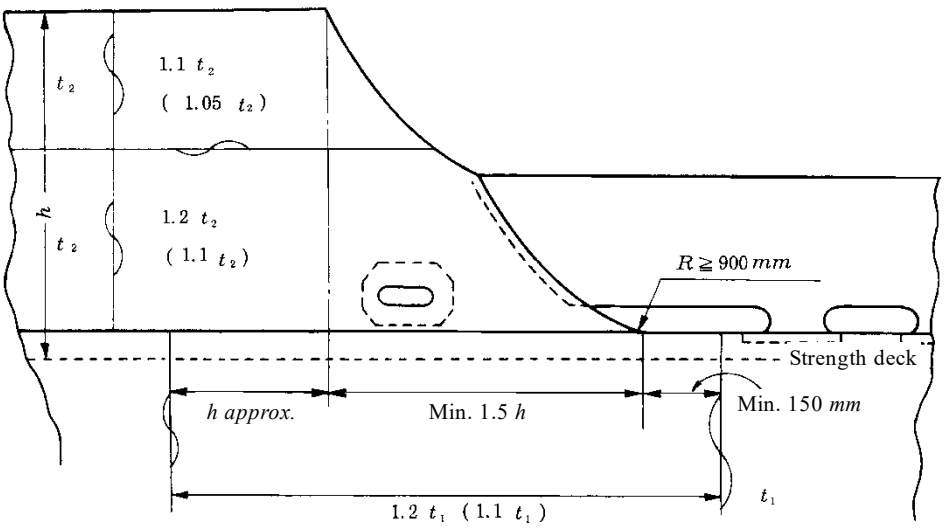

(Remarks)

1. t_1 is thickness of the sheer strake.
2. t_2 is thickness of the side shell of the superstructure.
3. Symbols not in parentheses are for the case when the superstructure deck is a strength deck.
4. Symbols in parentheses are the thickness when the superstructure deck is not a strength deck.

Fig. C11.3.2-2 Construction of Superstructure End (Where expansion joint is not installed)

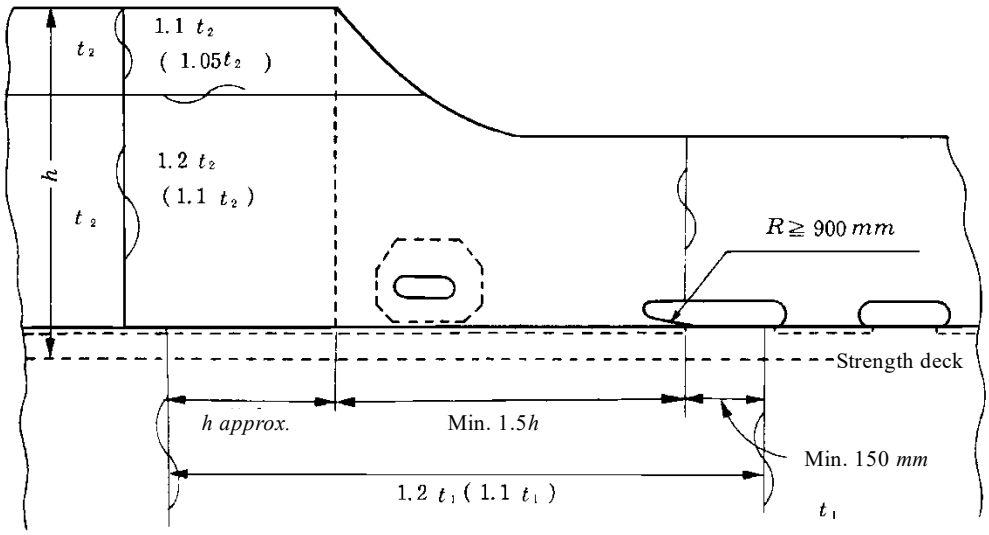

(Remarks)

See the Remarks in **Fig. C11.3.2-1.**

C11.4 Machinery Spaces

C11.4.2 Main Engine Foundations

C11.4.2.1 Ships with Double Bottoms

1 The following method for determining the scantlings of the structural members of the double bottom construction in machinery spaces is to be standard. Other methods approved by the Society may be acceptable.

(1) The thickness of the centre girder (net scantlings) is not to be less than the value obtained by the following formula:

$t = 4.2 + 0.056L_c\ (mm)$

(2) The thickness of the side girder and floors (net scantlings) is not to be less than the value obtained by the following formulae:

When $L_c \leq 100\ m$: $t = 0.6\sqrt{L_c} + 2.5\ (mm)$

When $L_c > 100\ m$: $t = 5.0 + 0.035\ L_c\ (mm)$

2 Girder plates beneath seat plates of the main engine are generally to penetrate inner bottom plates. Where they are unable to penetrate, the inner bottom plates are to be suitably thicker than required and rider plates are to be welded with edge preparation. If manholes are provided in girder plates, their number is to be minimized as far as possible.

3 Where main engines are directly installed on to inner bottom plates, the compartments beneath main engines are recommended to be coffer dams. Where they are used as deep tanks, cap nut, packing, etc. are to be fitted to the foundation bolts in order to keep water/oil tightness.

C11.5 Stern Structure

C11.5.1 Stern

C11.5.1.2 Propeller Post

Where round steel bar is used as the aft edge of a fabricated stern frame, a radius (gross scantlings) not less than $0.7(0.40\ L + 16)$ is to be used as the standard. At the connection of the round bar to the cast steel part or at the connection of round bars, the depth of the bevel for welding is to be at least 1/3 of the diameter of the round bar.

C11.5.1.5 Rudder Horn

In the application of **11.5.1.5, Part C of the Rules**, the bending moment, shear force, torque, and stresses to be considered are to be obtained by the direct calculation or the simple calculation method. Data used in the direct calculation are to be in accordance

with **C13.2.4**. The simple calculation method is to be according to the following **(1)** and **(2)**.

(1) Rudder horn with single point elastic support

(a) The bending moment M of the cross section under consideration is to be as obtained from the following equation (*See* **Fig. C11.5.1-1**):

$M = Bz \quad (M_{max} = Bd \times 10^{-3})$ (*N-m*)

B: Supporting force (*N*) of the pintle bearing obtained by **13.2.4, Part C of the Rules**.

(b) The torsional moment T_h of the cross section under consideration is to be as obtained from the following equation (*See* **Fig. C11.5.1-1**):

$T_h = Bc(z)$ (*N-m*)

(2) Rudder horn with two-point elastic support

(a) Bending moment

The bending moment (*N*) acting on the general cross section of the rudder horn is to be as obtained from the following equations:

i) Between the upper and lower supports of the rudder horn

$M = F_{A1}z$

ii) Above the upper support of the rudder horn

$M = F_{A1}z + F_{A2}(z - d_{lu} \times 10^{-3})$

F_{A1}: Supporting force (*N*) at the lower support of the rudder horn, which is B_1 in **Fig. C13.2.4-7**.

F_{A2}: Supporting force (*N*) at the lower support of the rudder horn (*N*), which is B_2 in **Fig. C13.2.4-7**.

z: Distance specified (*m*) in **Fig. C11.5.1-2**, which is to be less than the distance d (*mm*) specified in the drawing.

d_{lu}: Distance (*mm*) between the bottom bearing and upper bearing of the rudder horn ($d_{lu} = d - \lambda$ in **Fig. C13.2.4-7**).

(b) Shear force

The shear force B (*N*) acting on the general cross section of the rudder horn is to be as obtained from the following equations:

i) Between the upper and lower bearings of the rudder horn

$B = F_{A1}$

ii) Above the upper bearing of the rudder horn

$B = F_{A1} + F_{A2}$

F_{A1}, F_{A2}: Supporting force (*N*)

(c) Torque

The torque (*N-m*) acting on the general cross section of the rudder horn is to be as obtained from the following equations:

i) Between the upper and lower bearings of the rudder horn

$T_h = F_{A1}e_{(Z)}$

ii) Above the upper bearings of the rudder horn

$T_h = F_{A1}e_{(Z)} + F_{A2}e_{(Z)}$

F_{A1}, F_{A2}: Supporting force (*N*).

$e_{(Z)}$: Lever arm length (*m*) of the torsional moment specified in **Fig. C11.5.1-2**.

(d) Calculation of shearing stress and torsional stress

i) Stresses in the general cross section of the rudder horn between the lower bearing and upper bearing are to be obtained from the following equations:

τ: Shear stress (*N/mm*^{2}) according to the following equation

$$\tau = \frac{F_{Al}}{A_h}$$

τ_t: Torsional stress (*N/mm*^{2}) for the hollow rudder horn according to the following equation

$$\tau_t = \frac{T_h}{2F_T t_h} \times 10^{-3}$$

For solid rudder horns, the calculation method is to be as deemed appropriate by the Society.

F_{Al}, F_{A2}: Supporting force (*N*)

A_h: Effective shear area (mm^2) of the rudder horn in the Y-axis direction.

T_h: Torque (N-m)

F_T: Average area (m^2) of the outer wall of the rudder horn

t_h: Thickness (mm) of the outer wall of the rudder horn. The maximum τ_t in any cross section of the rudder horn is to be calculated at the position where t_h is minimum.

ii) Stresses in the general cross section of the rudder horn above the upper bearing are to be obtained from the following equations.

τ: Shear stress (N/mm^2) according to the following equation

$$\tau = \frac{F_{A1} + F_{A2}}{A_h}$$

τ_t: Torsional stress (N/mm^2) for the hollow rudder horn according to the following equation

$$\tau_t = \frac{T_h}{2F_T t_h} \times 10^{-3}$$

For solid rudder horns, the calculation method is to be as deemed appropriate by the Society.

F_{A1}, F_{A2}, A_h, T_h, F_T, t_h: As specified in **i)** above.

(e) Calculation of bending stress

The stress in the general cross section of the rudder horn within the region of length d is to be obtained according to the following equation:

σ_b: Bending stress (N/mm^2) according to the following equation

$$\sigma_b = \frac{M}{Z_X}$$

M: Bending moment (N-m) of the cross section under consideration

Z_X: Section modulus (cm^3) about X-axis (*See* **Fig. C11.5.1-2**)

Fig. C11.5.1-1 Geometry Parameters of Rudder Horn (Single Point Elastic Support)

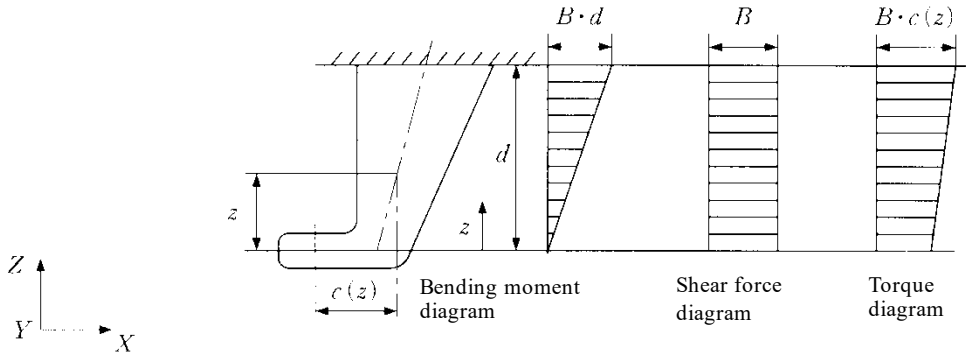

Fig. C11.5.1-2 Geometry Parameters of Rudder Horn (2-point Elastic Support)

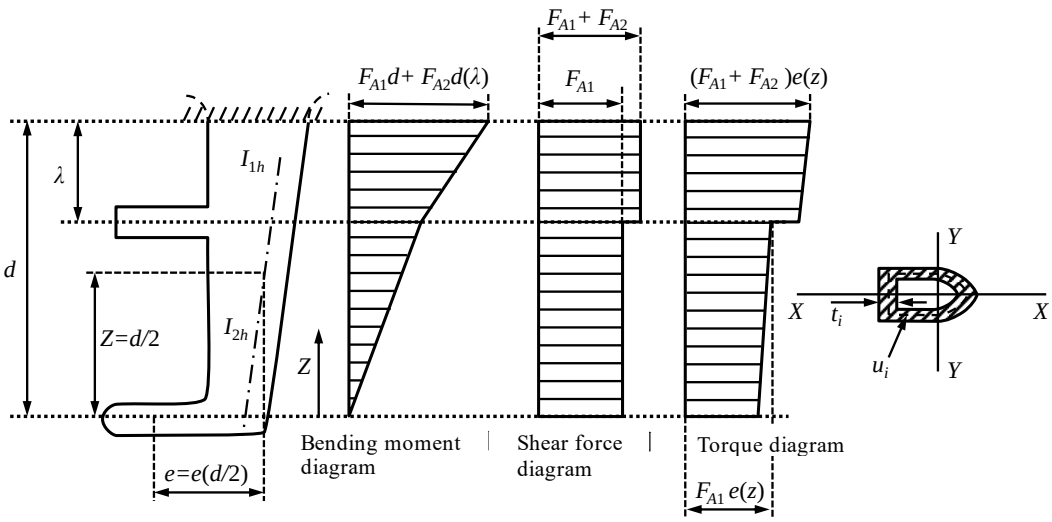

C11.5.2 Arrangements to Resist Panting Abaft of After Peak Bulkhead

C11.5.2.5 Shell Plating connected with Stern Frame

1 The thicknesses of shell plating connected with stern frames are not to be less than those obtained from the following formula:

$$t = 0.094(L_{C300} - 43) + 0.009b$$

b: Length (mm) of the shorter side of the plate panel

2 Notwithstanding **-1** above, the thicknesses of shell plating in way of bosses and heel plates are not to be less than those obtained from the following formula:

$$t = 0.105(L_{C300} - 47) + 0.011b$$

b: As specified in **-1** above

C12 WELDING

C12.2 Welded joints

C12.2.1 General

C12.2.1.2 Butt welded joints

1 The details of welded joints where large structures such as stern frames are built up by butt welding of large steel castings or steel forgings and steel plates as shown in **Fig. C12.2.1-1 (a)** and **(b)** are to be taken as standard.

Fig. C12.2.1-1 Details of Butt Joint of Steel Castings / Forgings and Steel Plates

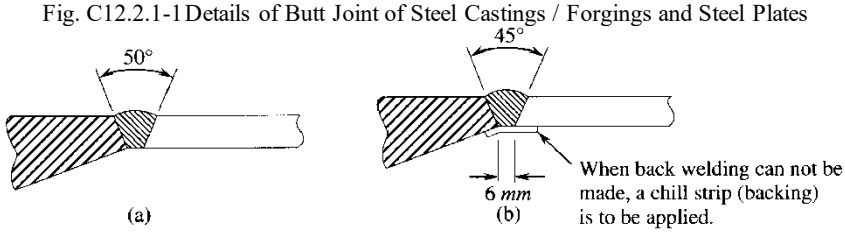

C12.2.1.4 Full or partial penetration welds

The groove angle made to ensure welding bead penetrating up to the root of the groove is usually from 40 *degrees* to 60 *degrees*.

C12.2.1.5 Other type of welded joints

1 The breadth of overlap for lap joints or joggled lap joints which may be subject to bending is to be equivalent to the standards specified below.

(1) The breadth of overlap for lap joints is not to be less than that obtained from the following formula, but need not exceed 50 *mm*.

$$2t + 25 \ (mm)$$

Where:

t: Thickness (*mm*) of the thinner plate

(2) The breadth of overlap for joggled lap joints is not to be less than that obtained from the following formula, but need not exceed 40 *mm*.

$$t + 25 \ (mm)$$

Where:

t: Thickness (*mm*) of the thinner plate

2 The details of welded joints where large structures such as stern frames are built up by lap welding of large steel castings or steel forgings and steel plates as shown in **Fig. C12.2.1-2 (a)** and **(b)** are to be taken as standard.

Fig. C12.2.1-2 Details of Lap Joints of Steel Castings / Forgings and Steel Plates

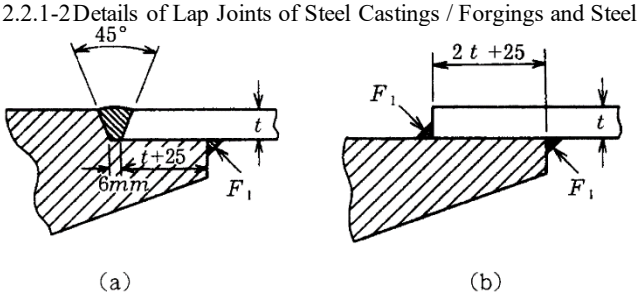

C12.2.2 Additional requirements for welded joint in specific location

C12.2.2.4 Connection of cast steel boss and plate parts of built-up stern frame

The details of welded joints when a stern frame is built up with steel castings are to be as shown in **Fig.C12.2.2-1** as a standard.

Fig. C12.2.2-1 Details of Joint of Cast Steel Stern Frame

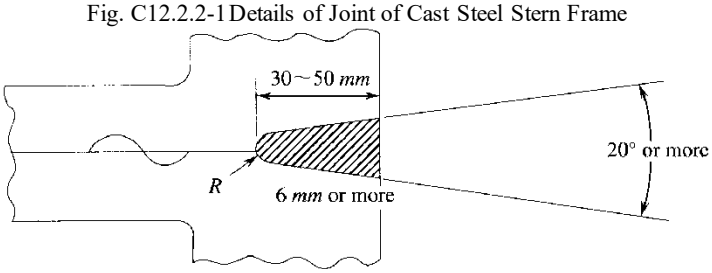

C13 RUDDERS

C13.2 Rudders

C13.2.1 General

C13.2.1.1 Application

1 The scantling of each member of rudders having three or more pintles is to be determined in accordance with the requirements in **Chapter 13, Part C of the Rules**. However, the moment and force acting on each member are to be determined by the direct calculation method, in accordance with the requirements in **C13.2.4**.

2 Rudders having a special shape or sectional form is to comply with the following **(1)** to **(2)**.

(1) The scantling of each member of nozzle rudders is to be determined in accordance with the requirements in **Chapter 13, Part C of the Rules**. In applying the Rules, the total rudder area A and the rudder area ahead of the centreline of the rudder stock A_f are to be calculated as follows, unless the rudder force and rudder torque are required to be determined by tests or detailed theoretical calculation.

Total rudder area A:

$A = 2h(b_1 + b_2) + h'(a_1 + a_2)\ (m^2)$

Rudder area ahead of the centreline of the rudder stock:

$A_f = 2hb_2\ (m^2)$

Where:

a_1, a_2, b_1, b_2, h and h': As defined in **Fig. C13.2.1-1**

(2) In other rudders, the scantling of each member is to be determined by obtaining the rudder force and rudder torque through tests or detailed theoretical calculations, and correspondingly applying the requirements in **Chapter 13, Part C of the Rules**. Results of tests or theoretical calculations are to be submitted to the Society.

Fig. C13.2.1-1 Area of Nozzle Rudder

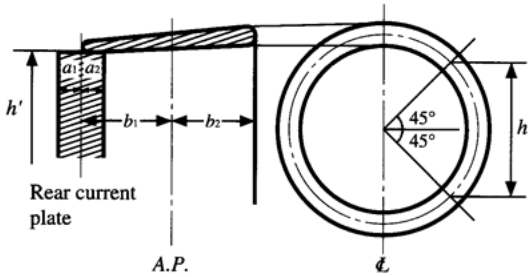

3 The scantling of each member of rudders designed for helm angles exceeding 35° is to be determined in accordance with the requirements in **Chapter 13, Part C of the Rules**, on the basis of the rudder force and rudder torque obtained through tests or detailed theoretical calculations. The results of tests and theoretical calculations are to be submitted to the Society.

C13.2.1.2 Materials

1 If the diameter of the rudder stock is small, cast carbon steel is not to be used.

2 Rolled bar steel (*KSFR*440-*M*) may be treated in the same way as *KSF*440-*M*.

C13.2.1.4 Equivalence

Where steel castings with a yield stress of less than 205 N/mm^2 are used for rudder main pieces according to the requirements of **13.2.1.4, Part C of the Rules**, the Society may require that consideration be given to the yield stress of such castings with respect to the application of the allowable stress of rudder main pieces in way of the recesses specified in **13.2.6.3-3(2), Part C of the Rules**.

C13.2.4 Rudder Strength Calculation

C13.2.4.1 Rudder Strength Calculation

1 The bending moment, shear force, and supporting force acting on the rudder and rudder stock may be evaluated using the basic

rudder models shown in **Fig. C13.2.4-1** to **Fig. C13.2.4-7**.

2 The bending moment M_R and the shear force Q_1 acting on the rudder body, the bending moment M_b acting on the bearing, and the bending moment M_s acting on the coupling between the rudder stock and the rudder main piece and the supporting forces B_1, B_2, B_3 are to be obtained. These moments and forces are to be used for analyzing the stresses in accordance with the requirements in **Chapter 13, Part C of the Rules**.

3 The method of evaluating moments and forces is to be as in the following **(1)** to **(3)** below. Notwithstanding the above, for Type *D* rudders with 2-conjugate elastic supports by rudder horns, the method of evaluating moments and forces is to be as in **4**.

(1) General data

Data on the basic rudder models shown in **Fig. C13.2.4-1** to **Fig. C13.2.4-6** is as follows:

ℓ_{10}~ℓ_{50}: Lengths (m) of individual girders of the system

I_{10}~I_{50}: Moments (cm^4) of inertia of these girders

For rudders supported by a shoe piece, the length l_{20} is the distance between the lower edge of the rudder body and the centre of the shoe piece and I_{20} is the moment of inertia of the pintle in the shoe piece.

h_c is the vertical distance (m) from the mid-point of the length of that pintle to the centroid of the rudder area.

(2) Direct calculation

The standard data to be used for direct calculation are as follows:

Load acting on rudder body (Type *B* rudder)

$$P_R = \frac{F_R}{1000\ell_{10}} \ (kN/m)$$

Load acting on rudder body (Type *C* rudder)

$$P_R = \frac{F_R}{1000\ell_{10}} \ (kN/m)$$

Notwithstanding the above, the value is as follows for rudders with rudder trunks supporting rudder stocks.

$$P_R = \frac{F_R}{1000(\ell_{10}+\ell_{20})} \ (kN/m)$$

Load acting on rudder body (Type *A* rudder)

$$P_{R10} = \frac{F_{R2}}{1000\ell_{10}} \ (kN/m)$$

$$P_{R20} = \frac{F_{R1}}{1000\ell_{30}} \ (kN/m)$$

Load acting on rudder body (Type *D* and *E* rudder)

$$P_{R10} = \frac{F_{R2}}{1000\ell_{10}} \ (kN/m)$$

$$P_{R20} = \frac{F_{R1}}{1000\ell_{20}} \ (kN/m)$$

F_R, F_{R1}, F_{R2}: As specified in **13.2.2.1** and **13.2.3, Part C of the Rules**

k: Spring constant of the supporting point of the shoe piece or rudder horn respectively, as shown below

For the supporting point of the shoe piece:

$$k = \frac{6.18I_{50}}{\ell_{50}{}^3} \ (kN/m) \quad (\textit{See } \textbf{Fig. C13.2.4-1} \text{ and } \textbf{Fig. C13.2.4-2})$$

I_{50}: The moment (cm^4) of inertia of shoe piece around the *Z*-axis

ℓ_{50}: Effective length (m) of shoe piece

For the supporting point of rudder horn:

$$k = \frac{1}{f_b+f_t} \ (kN/m) \quad (\textit{See } \textbf{Fig. C13.2.4-1}, \textbf{Fig. C13.2.4-4} \text{ and } \textbf{Fig. C13.2.4-5})$$

Where:

f_b : Unit displacement of rudder horn due to a unit force of 1 *kN* acting in the centre of support as shown below.

$$f_b = 1.3\frac{d^3}{6.18I_n} \ (m/kN)$$

Where:

I_n : The moment (cm^4) of inertia of rudder horn around the *X*-axis

f_t : Unit displacement due to torsion, as shown below.

$$f_t = \frac{dc^2\sum u_i/t_i}{3.14F_T{}^2}\times 10^{-8} \ (m/kN)$$

F_T : Mean sectional area (m^2) of the rudder horn

u_1 : Breadth (mm) of the individual plates forming the mean sectional area of the rudder horn

t_1 : Plate thickness (mm) within the individual breadth u_1

For c and d, *See* **Fig. C13.2.4-4** and **Fig. C13.2.4-5** (For the rudder horn of Type *A* rudders, the same values are to be also applied.)

(3) Simplified method

The moments and forces for rudders of each type may be obtained from the following formulae.

(a) Type *A* rudders

$$M_R = \frac{B_1{}^2(\ell_{10} + \ell_{30})}{2F_R} \ (N\text{-}m)$$

$$M_b = \frac{B_3(\ell_{30} + \ell_{40})(\ell_{10} + \ell_{30})^2}{\ell_{10}{}^2} \ (N\text{-}m)$$

$$M_s = B_3\ell_{40} \ (N\text{-}m)$$

$$B_1 = \frac{F_R h_c}{\ell_{10}} \ (N)$$

$$B_2 = F_R - 0.8B_1 + B_3 \ (N)$$

$$B_3 = \frac{F_R \ell_{10}{}^2}{8\ell_{40}(\ell_{10} + \ell_{30} + \ell_{40})} \ (N)$$

(b) Type *B* rudders

$$M_R = \frac{B_1{}^2\ell_{10}}{2F_R} \ (N\text{-}m)$$

$$M_b = B_3\ell_{40} \ (N\text{-}m)$$

$$M_s = \frac{3M_R\ell_{30}}{\ell_{10} + \ell_{30}} \ (N\text{-}m)$$

$$B_1 = \frac{F_R h_c}{\ell_{10} + \ell_{30}} \ (N)$$

$$B_2 = F_R - 0.8B_1 + B_3 \ (N)$$

$$B_3 = \frac{F_R(\ell_{10} + \ell_{30})^2}{8\ell_{40}(\ell_{10} + \ell_{30} + \ell_{40})} \ (N)$$

(c) Type *C* rudders

$$M_b = F_R h_c \ (N\text{-}m)$$

$$B_2 = F_R + B_3 \ (N)$$

$$B_3 = \frac{M_b}{\ell_{40}} \ (N)$$

The maximum moment M_c in top of the cone coupling (as shown in **Fig. C13.2.4-3**) is applicable for the connection between the rudder and the rudder stock.

Notwithstanding the above, the strength is to be checked against the following two cases for rudders with rudder trunks supporting rudder stocks.

i) pressure applied on the entire rudder area; and

ii) pressure applied only on rudder area below the middle of neck bearing.

The moments and forces for the two cases defined above may be determined according to **Fig. C13.2.4-6** and **Fig. C13.2.4-7**, respectively.

$$M_{FR1} = F_{R1}(CG_{1Z} - \ell_{10})$$

$$M_{FR2} = F_{R2}(\ell_{10} - CG_{2Z})$$

where A_1 and A_2 are the rudder blade area which are above the lower bearing and below respectively and symbols are as follows (*See* **Fig. C13.2.4-6** and **Fig. C13.2.4-7**)

F_{R1} : Rudder force over the rudder blade area A_1

F_{R2} : Rudder force over the rudder blade area A_2

CG_{1Z} : Vertical position of the centre of gravity of the rudder blade area A_1 from base

CG_{2Z} : Vertical position of the centre of gravity of the rudder blade area A_2 from base

$$F_R = F_{R1} + F_{R2}$$
$$B_2 = F_R + B_3$$
$$B_3 = \frac{M_{FR2} - M_{FR1}}{\ell_{20} + \ell_{40}}$$

(d) Type *D* rudders

$$M_R = \frac{F_{R2}\ell_{10}}{2} \ (N\text{-}m)$$
$$M_b = \frac{F_R {\ell_{10}}^2}{10(\ell_{20} + \ell_{30})} \ (N\text{-}m)$$
$$M_s = \frac{2M_R\ell_{10}\ell_{30}}{(\ell_{20} + \ell_{30})^2} \ (N\text{-}m)$$
$$B_1 = \frac{F_R h_c}{\ell_{20} + \ell_{30}} \ (N)$$
$$B_2 = F_R - B_1, \quad \min B_2 = F_R/4 \ (N)$$
$$B_3 = \frac{M_b}{\ell_{40}} \ (N)$$
$$Q_1 = F_{R2} \ (N)$$

(e) Type *E* rudders

$$M_R = \frac{F_{R2}\ell_{10}}{2} \ (N\text{-}m)$$
$$M_b = \frac{F_R {\ell_{10}}^2}{10\ell_{20}} \ (N\text{-}m)$$
$$B_1 = \frac{F_R h_c}{\ell_{20}} \ (N)$$
$$B_2 = F_R - B_1, \quad \min B_2 = F_R/4 \ (N)$$
$$B_3 = \frac{M_b}{\ell_{40}} \ (N)$$
$$Q_1 = F_{R2} \ (N)$$

4 For Type *D* rudders with 2-conjugate elastic supports by rudder horns, the method of evaluating moments and forces is to be as in **(1)** and **(2)** below.

(1) General data

K_{11}, K_{22}, K_{12}: Rudder horn compliance constants calculated for rudder horn with 2-conjugate elastic supports (*See* **Fig. C13.2.4-7**). The 2-conjugate elastic supports are defined in terms of horizontal displacements, y_i, by the following equations:

at the lower rudder horn bearing: $y_1 = -K_{12}B_2 - K_{22}B_1$

at the upper rudder horn bearing: $y_2 = -K_{11}B_2 - K_{12}B_1$

y_1, y_2: Horizontal displacements (m) at the lower and upper rudder horn bearings, respectively

B_1, B_2: Horizontal support forces (kN) at the lower and upper rudder horn bearings, respectively

K_{11}, K_{22}, K_{12}: Obtained (m/kN) from the following formulae:

$$K_{11} = 1.3 \cdot \frac{\lambda^3}{3EI_{1h}} + \frac{e^2\lambda}{GI_{th}}$$
$$K_{12} = 1.3\left[\frac{\lambda^3}{3EI_{1h}} + \frac{\lambda^2(d-\lambda)}{2EI_{1h}}\right] + \frac{e^2\lambda}{GI_{th}}$$
$$K_{22} = 1.3\left[\frac{\lambda^3}{3EI_{1h}} + \frac{\lambda^2(d-\lambda)}{EI_{1h}} + \frac{\lambda(d-\lambda)^2}{EI_{1h}} + \frac{(d-\lambda)^3}{3EI_{2h}}\right] + \frac{e^2 d}{GI_{th}}$$

d: Height of the rudder horn (m) defined in **Fig. C13.2.4-7**. This value is measured downwards from the upper rudder horn end, at the point of curvature transition, till the mid-line of the lower rudder horn pintle

λ: Length (m) as defined in **Fig. C13.2.4-7**. This length is measured downwards from the upper rudder horn end, at the point of curvature transition, till the mid-line of the upper rudder horn bearing. For $\lambda = 0$, the above formulae converge

to those of spring constant Z for a rudder horn with 1-elastic support, and assuming a hollow cross section for this part

e: Rudder-horn torsion lever (m) as defined in **Fig. C13.2.4-7** (value taken at $z = d/2$)

I_{1h}: Moment of inertia of rudder horn about the X axis (m^4) for the region above the upper rudder horn bearing. Note that I_{1h} is an average value over the length λ (*See* **Fig. C13.2.4-7**)

I_{2h}: Moment of inertia of rudder horn about the X axis (m^4) for the region between the upper and lower rudder horn bearings. Note that I_{2h} is an average value over the length $d - \lambda$ (*See* **Fig. C13.2.4-7**)

I_{th}: Torsional stiffness factor of the rudder horn for any thin wall closed section (m^4) is as follows:

$$I_{th} = \frac{4{F_T}^2}{\sum_i \frac{u_i}{t_i}}$$

F_T: Mean of areas enclosed by outer and inner boundaries of the thin walled section of rudder horn (m^2)

u_i: Length (mm) of the individual plates forming the mean horn sectional area

t_i: Thickness (mm) of the individual plates mentioned above

Note that the I_{th} value is taken as an average value, valid over the rudder horn height.

(2) Direct calculation

The standard data to be used for direct calculation are as follows:

Load acting on rudder body (kN/m)

$$p_{R10} = \frac{F_{R2}}{\ell_{10} \cdot 10^3}$$

$$p_{R20} = \frac{F_{R1}}{\ell_{20} \cdot 10^3}$$

F_R, F_{R1}, F_{R2}: As defined in **13.2.3.2**

Fig. C13.2.4-1 Type *A* Rudder

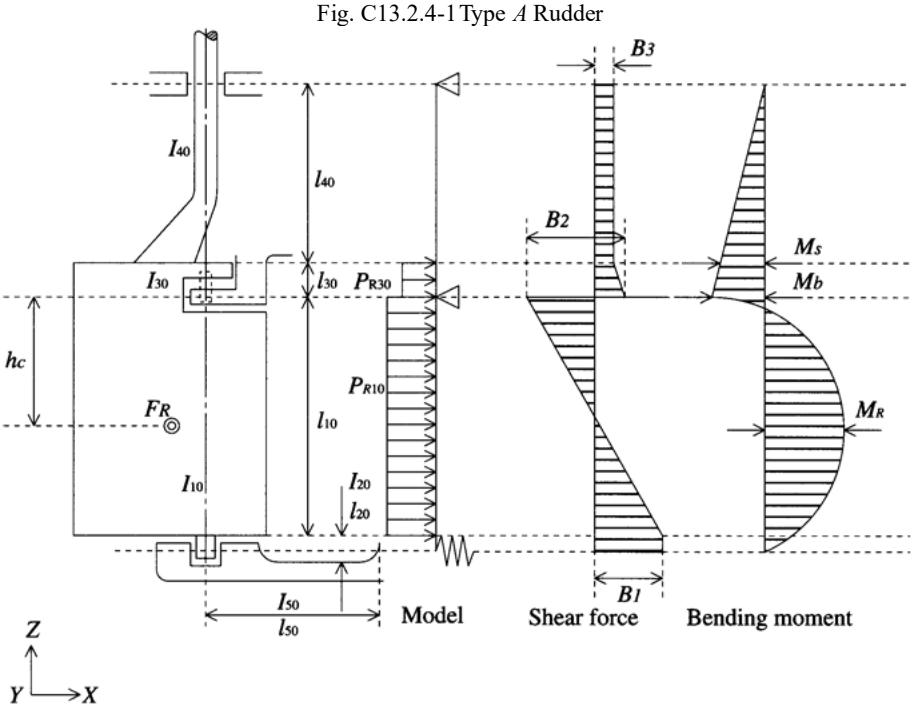

Fig. C13.2.4-2 Type *B* Rudder

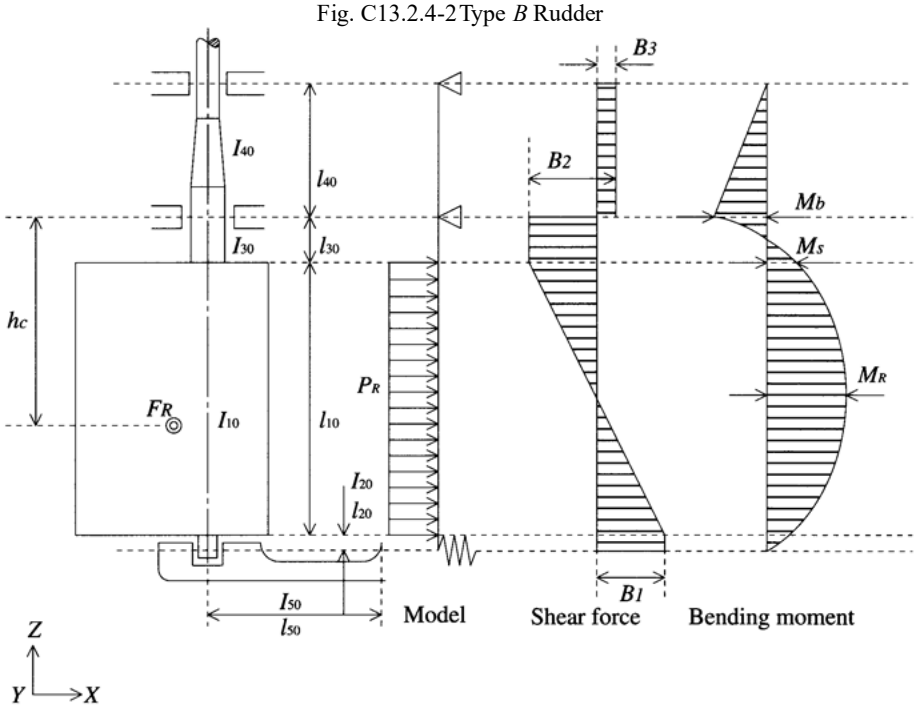

Fig. C13.2.4-3 Type *C* Rudder

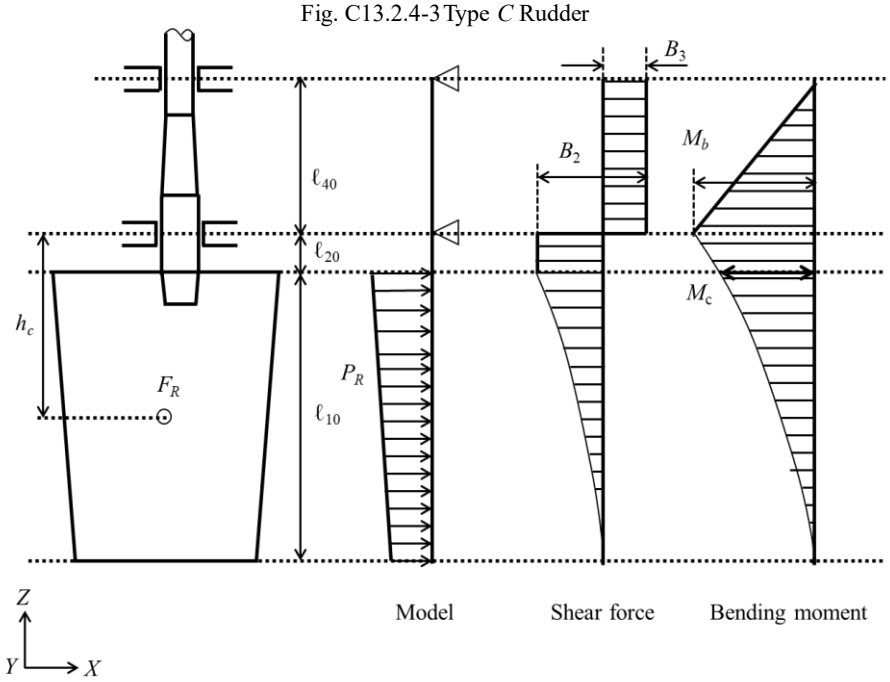

Fig. C13.2.4-4 Type *D* Rudder

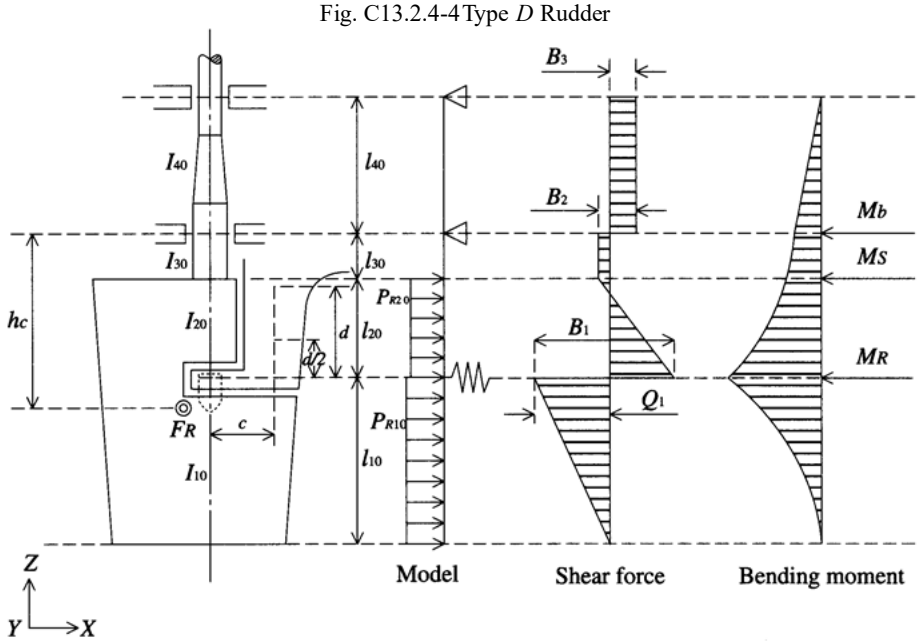

Fig. C13.2.4-5 Type *E* Rudder

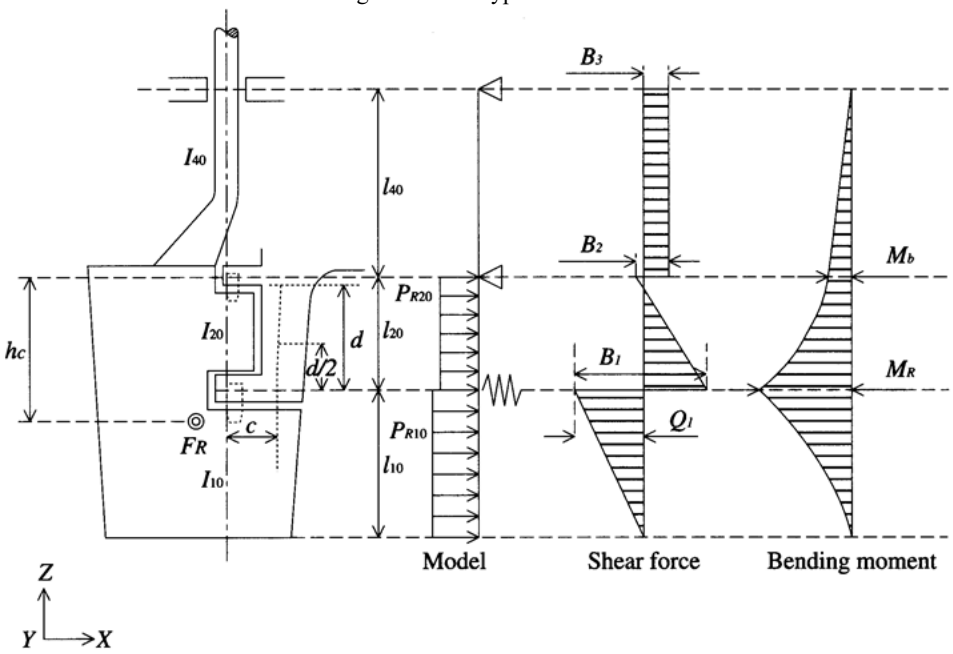

Fig. C13.2.4-6 Type *C* Rudder with Rudder Trunk Supporting Rudder Stock (Pressure Applied on the Entire Rudder Area)

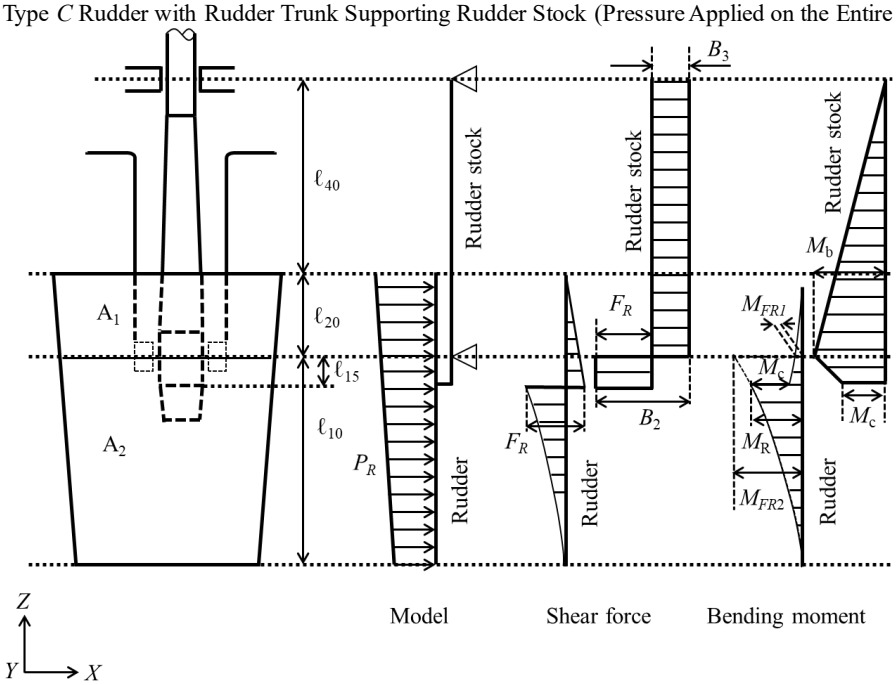

Fig. C13.2.4-7 Type *C* Rudder with Rudder Trunk Supporting Rudder Stock (Pressure Applied only on Rudder Area below the Middle of Neck Bearing)

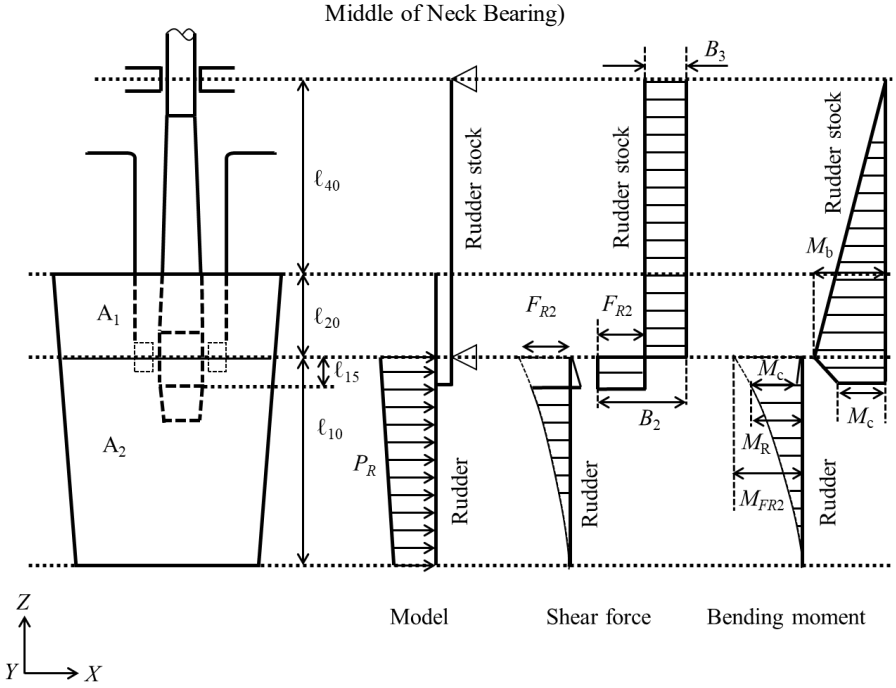

Fig. C13.2.4-8 Type *D* Rudder with 2-conjugate Elastic Supports

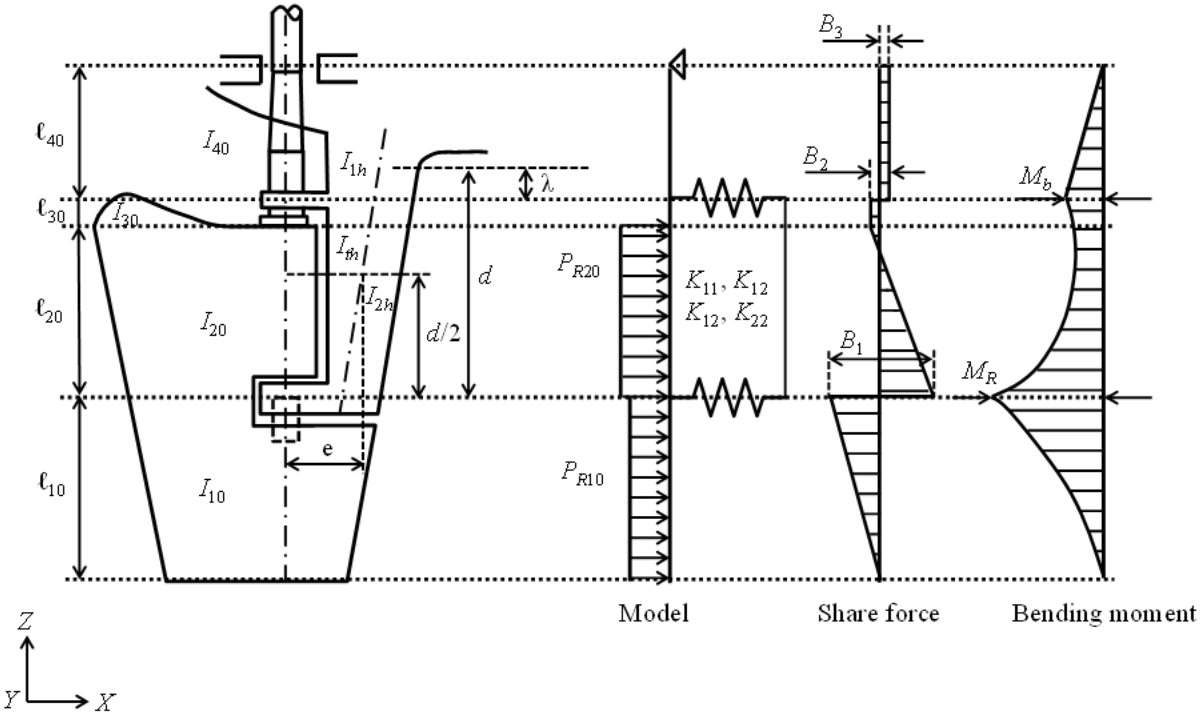

C13.2.5 Rudder Stocks

C13.2.5.1 Upper Stocks

1 Where the upper stocks are tapered for fitting the tiller, the taper is not to exceed 1/25 of the radius or 1/12.5 of the diameter.

2 Keyways is to comply with the following **(1)** to **(2)**.

(1) The depth of the keyway may be neglected in determining the diameter of the rudder stock.

(2) All corners of keyways are to be properly rounded.

3 Each part of the rudder stocks of Type *B*, *C* and *D* rudders specified in **13.2.5, Part C of the Rules** is to be so constructed as shown below.

Fig. C3.5.1-1 Rudder Stock of Type *B*, *C* and *D* Rudder

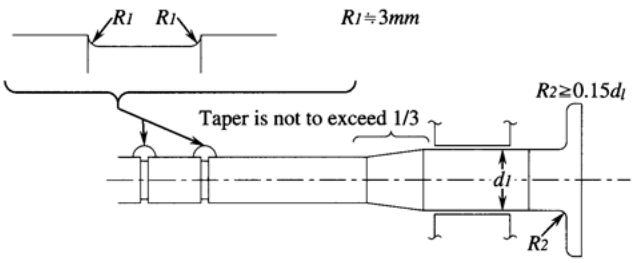

C13.2.6 Rudder Plates, Rudder Frames and Rudder Main Pieces

C13.2.6.3 Rudder Main Pieces

1 In Type *D* and Type *E* rudders, the effective breadth of the rudder plate B_e to be included in the section modulus of the main piece is to be as shown in **Fig. C13.2.6-1**. However, the cover plate which is removed to lift up the rudder is not to be included in the section modulus. These requirements also apply to Type *A* rudders.

2 For the material coefficient K_m, use the highest value of K_m for the material used in the section under consideration.

Fig. C13.2.6-1 Effective Breadth of Rudder Plate

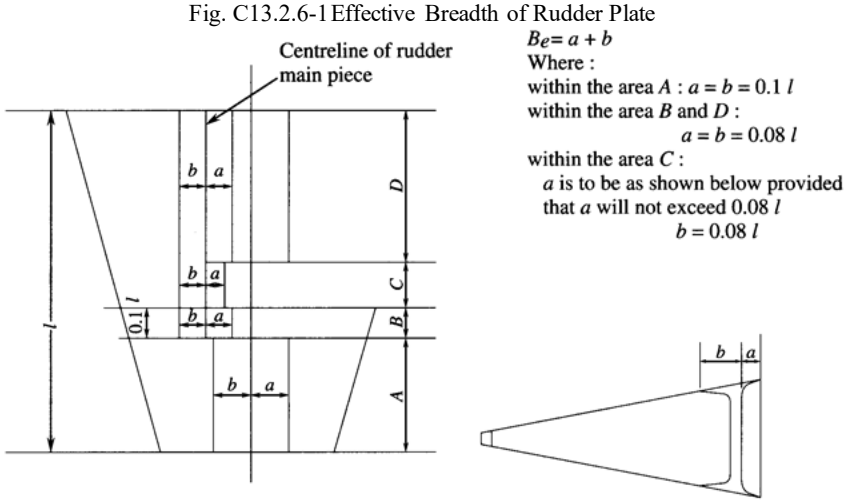

C13.2.6.4 Connections

In principle, edge bars are to be fitted to the aft end of the rudder. However, considering the size and form of the rudder, weldability, etc., edge bars and/or chill plates may be omitted. (*See* **Fig. C13.2.6-2**)

Fig. C13.2.6-2 Aft end Construction of Rudder

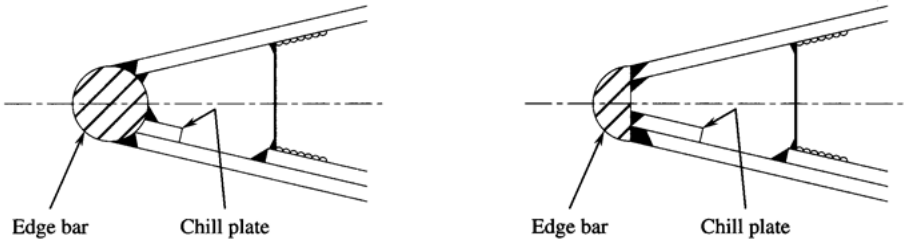

C13.2.8 Couplings between Rudder Stocks and Main Pieces

C13.2.8.1 Horizontal Flange Couplings

1 In the application of **13.2.8.1-1, Part C of the Rules**, the diameter of the coupling bolt d_l in Type *A* and Type *E* rudders is to be determined in accordance with the requirements in **13.2.5.2, Part C of the Rules**, assuming that the lower stock is cylindrical.

2 The nuts of coupling bolts are to have locking devices. They may be split pins.

C13.2.8.2 Vertical Flange Couplings

1 In the application of **13.2.8.2-1, Part C of the Rules**, the diameter of the coupling bolt d_l in Type *A* and Type *E* rudders is to be determined in accordance with the requirements in **13.2.5.2, Part C of the Rules**, assuming that the lower stock is cylindrical.

2 The nuts of coupling bolts are to have locking devices. They may be split pins.

C13.2.8.3 Cone Couplings with Key

1 Cone Couplings with Key is to comply with the following **(1)** to **(4)**:

(1) The lower stock is to be securely connected to the rudder body with slugging nuts or hydraulic arrangements. Shipbuilders are to submit data on this connection to the Society.

(2) Special attention is to be paid to corrosion of the lower stock.

(3) The thickness t_B of the cast steel part of the rudder body (*See* **Fig. C13.2.8-1**) is not to be less than 0.25 times the required diameter of the lower stock.

(4) In the application of **13.2.8.3-1** to **-3**, **Part C of the Rules**, actual values are to be used for d_0, d_g and d_e.

Fig. C13.2.8-1 Coupling Between Lower Stock and Rudder Main Piece

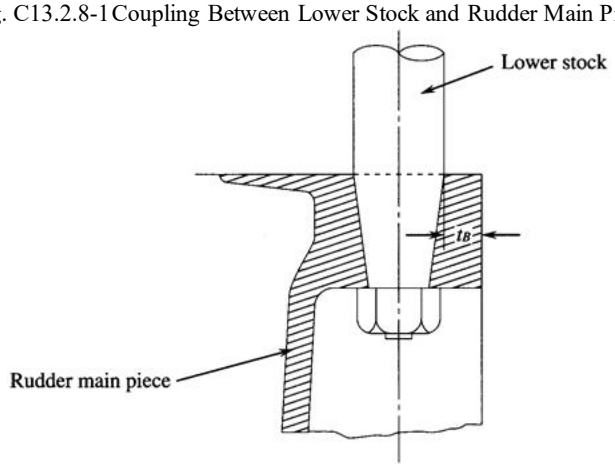

2 In the application of **13.2.8.3-5**, **Part C of the Rules** the scantlings of the key are as follows in cases where all rudder torque is considered to be transmitted by the key at the couplings.

(1) The shear area A_K of keys is not to be less than:

$$A_K = \frac{30T_R K_K}{d_K} \ (mm^2)$$

d_K : Rudder stock diameter at the mid-point of length of the key(mm)

K_K : Material factor for the key as given in **13.2.1.2**, **Part C of the Rules**

T_R : Rudder torque obtained from **13.2.3**, **Part C of the Rules** (N-m)

(2) The abutting surface area A_C between the key and rudder stock or between the key and rudder body, respectively,is not to be less than:

$$A_C = \frac{10T_R K_{max}}{d_K} \ (mm^2)$$

K_{max}: The greater of the material factors (given in **13.2.1.2, Part C of the Rules**) between the rudder stock and the key it is in contact with or the greater of the material factors between the rudder body and the key it is in contact with

d_K and T_R: As specified in **(1)**

C13.2.9 Pintles

C13.2.9.2 Construction of Pintles

1 Split pins are not recommendable as the locking device for pintle nuts. Locking rings or other equivalent devices are to be used, as shown in **Fig. C13.2.9-1**.

2 To prevent corrosion of pintles, the end of the sleeve is to be filled with red lead, grease packing, bituminous enamel, rubber, etc. as shown in **Fig. C13.2.9-1**.

3 Combining pintle and rudder frame into a monoblock is not recommended.

4 For the reaction force in bearing B specified in **13.2.9.2-2, Part C of the Rules**, for example, B_1 defined in **Fig. C13.2.4-4** is used for Type D rudders.

Fig. C13.2.9-1 Locking Ring

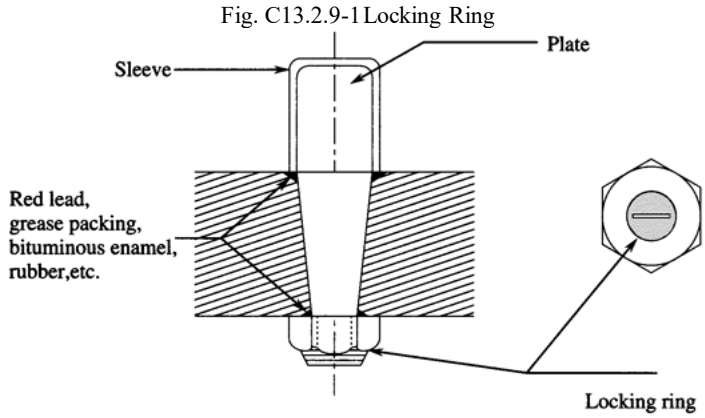

C13.2.10 Bearings of Rudder Stocks and Pintles

C13.2.10.2 Minimum Bearing Surface

1 Where a metal bush is used, the sleeve is to be of a different material from the bush (for example, sleeve of *CAC*403, and bush of *CAC*402)

2 "The type as deemed appropriate by the Society" stipulated in **Table 13.2.10-1, Part C of the Rules** means that approval is to be made in accordance with the requirements of **Chapter 5, Part 4 of Guidance for the Approval and Type Approval of Materials and Equipment for Marine Use**.

C13.2.10.4 Bearing Clearances

Where a bush is non-metal, the standard bearing clearance is to be 1.5~2.0 *mm* in diameter.

C13.2.11 Rudder Accessories

C13.2.11.1 Rudder Carriers

1 Rudder carriers and intermediate bearings are to be of steel. They are not to be of cast iron.

2 Thrust bearing of rudder carrier is to comply with the followings.

(1) The bearing is to be provided with a bearing disc made of *CAC*400 or other equivalent materials.

(2) The calculated bearing pressure is not to exceed 0.98 *MPa* as a standard. In calculating the weight of the rudder, its buoyancy is to be neglected.

(3) The requirements in **(1)** and **(2)** above need not be applied to bearings in cases where good lubrication can be confirmed under the assumed bearing surface pressure through documentation submitted either by manufacturers or shipyards.

(4) The bearing part is to be well lubricated by dripping oil, automatic grease feeding, or a similar method.

(5) The bearing is to be designed to be structurally below the level of lubricating oil at all times. (*See* **Fig. C13.2.11-1**)

Fig. C13.2.11-1 Rudder Carrier

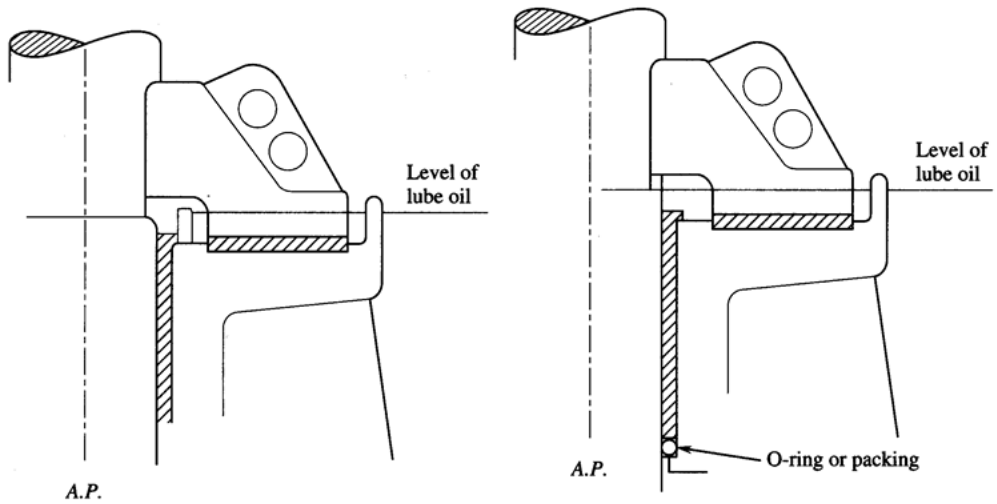

3 It is recommended that the packing gland in the stuffing box have an appropriate clearance from the rudder stock corresponding to the position of the stuffing box. The standard clearance is to be 4 *mm* for the stuffing box provided at the neck or intermediate bearing, and 2 *mm* for the stuffing box at the upper stock bearing.

4 In split type rudder carriers, at least two bolts are to be used on each side of the rudder for assembly.

5 Installation of rudder carriers is to comply with the following **(1)** to **(3)**:

(1) It is recommended that the rudder carrier is directly installed on the seat on the deck.

(2) A spigot type seat is not recommended to be installed on the deck.

(3) The hull construction in way of the rudder carrier is to be suitably reinforced.

6 The bolts of rudder carriers and intermediate bearings is to comply with the following **(1)** to **(2)**:

(1) At least one half of the bolts securing the rudder carrier and the intermediate bearing are to be reamer bolts. If stoppers for preventing the rudder carrier from moving are to be fitted on the deck, all bolts may be ordinary bolts. In using chocks as

stoppers, they are to be carefully arranged so that they are not driven in, in the same direction. (*See* **Fig. C13.2.11-2**)

(2) The total sectional area of the bolts securing the rudder carriers to the deck

(a) In ships provided with electrohydraulic steering gears, the total sectional area of the bolts securing the rudder carriers or the bearing just under the tiller to the deck is not to be less than that obtained from the following formula, unless the appropriate examinations are carried out for load applying bolts and strength of material used for bolt.

$0.1{d_u}^2 (mm^2)$

d_u: Required diameter of upper stock (mm)

(b) Where the arrangement of the steering gear is such that each of the two tiller arms is connected with an actuator and two actuators function simultaneously, or is of any other type where the rudder stock is free from horizontal force, the total sectional area of bolts securing the rudder carrier to the deck may be reduced to 60% of the area required in **(a)**.

(c) Where all the bolts securing the rudder carrier to the deck are reamer bolts, the total sectional area of bolts may be reduced to 80% of the area required by **(a)** and **(b)**.

C13.2.11.2 Prevention of Jumping

A 2 mm clearance between the jumping stopper and its contact surface is deemed as standard.

Fig. C13.2.11-2 Securing Arrangement of Rudder Carrier on Deck

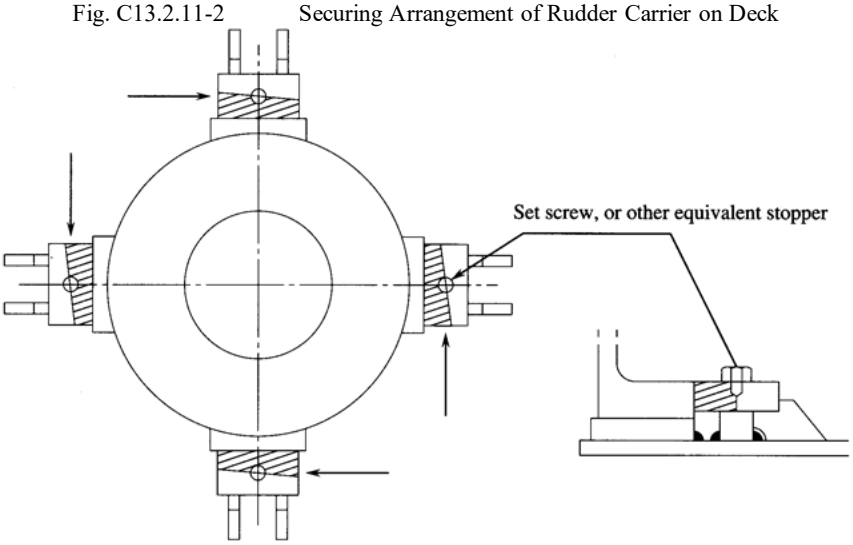

C14 EQUIPMENT

C14.3 Anchors and Chain Cables

C14.3.1 Anchoring Equipment

C14.3.1.1 General

The "special consideration" referred to in **14.3.1.1-3, Part C of the Rules** means the evaluation of the design effectiveness of anchors, chain cables and windlasses. For ships for which L_2 defined in **14.5.1.1-1(3), Part C of the Rules** is not less than 135 *m*, the following **(1)** to **(4)** may be used for the design or to assess the adequacy of the anchoring equipment. However, the application of these requirements is limited to anchoring operations in water of depths up to 120 *m*, currents up to 1.54 *m/s*, winds up to 14 *m/s* and waves with significant heights up to 3 *m*. Furthermore, the scope of chain cables, being the ratio between the paid-out length of the chain and water depth, is limited to between 3 and 4.

(1) Anchors and chain cables are to be in accordance with **Table C14.3.1-1** and based on the Equipment number EN_1 obtained from the following formula:

$$EN_1 = 0.628\left[a\left(\frac{EN}{0.628}\right)^{1/2.3} + b(1-a)\right]^{2.3}$$

a: As obtained from the following formula:

$$a = 1.83\times10^{-9}L_2^3 + 2.09\times10^{-6}L_2^2 - 6.21\times10^{-4}L_2 + 0.0866$$

b: As obtained from the following formula:

$$b = 0.156L_2 + 8.372$$

L_2: as defined in **14.5.1.1-1(3), Part C of the Rules**

EN: Equipment number specified in **14.5, Part C of the Rules**

(2) Anchors are to be in accordance with the following **(a)** to **(d)**.

(a) Bow anchors are to be connected to their chain cables and positioned on board ready for use.

(b) Anchors are to be of a stockless high holding power (HHP) type. The mass of the head of a stockless anchor, including pins and fittings, is not to be less than 60 % of the total mass of the anchor.

(c) The mass, per anchor, of bower anchors given in **Table C 14.3.1-1** is for anchors of equal mass. The mass of individual anchors may vary up to 7% of the tabular mass, but the total mass of anchors is not to be less than that required for anchors of equal mass.

(d) To hold the anchor tight in against the hull or the anchor pocket, respectively, it is recommended to fit anchor lashings appropriately (e.g. by using a "devils claw", etc.).

(3) Bower anchors are to be in accordance with the following **(a)** to **(b)**.

(a) Bower anchors are to be associated with stud link chain cables of special (Grade 2) or extra special (Grade 3) quality. The total length of chain cables, as given in **Table C 14.3.1-1**, is to be reasonably divided between the two bower anchors. For the proof and breaking loads of stud link chain cables, reference is made to **Table L3.5, Part L of the Rules**.

(b) For the installation of the chain cables on board, **14.3, Part C of the Rules** is to be observed.

(4) Windlass design and testing as well as chain stopper design are to be in accordance with **Chapter 16, Part D of the Rules**. In addition, windlasses and chain stoppers are to be in accordance with the following **(a)** to **(c)**.

(a) The windlass unit prime mover is to be able to supply a continuous duty pull Z_{cont} (in *N*) for at least 30 *minutes*. Z_{cont} is to be obtained as follows:

$$Z_{cont} = 35d^2 + 13.4m_A$$

d: chain diameter (*mm*) as per **Table C14.3.1-1**

m_A: HHP anchor mass (*kg*) as per **Table C14.3.1-1**

(b) As far as practicable for testing purposes, the test speed of the chain cable during hoisting of the anchor and cable is to be measured over 37.5 *m* of the chain cable and initially with at least 120 *m* of chain and the anchor submerged and hanging

free. The mean speed of the chain cable during hoisting of the anchor from the depth of 120 *m* to the depth of 82.5 *m* is to be at least 4.5 *m/min*.

(c) For the supporting hull structures of anchor windlasses and chain stoppers, reference is made to the requirements specified in **14.3.1.5, Part C of the Rules**.

Table C14.3.1-1 Anchoring Equipment for Ships in Unsheltered Water of Depths up to 120 *m*

Equipment letter	Equipment number EN_1		High holding power stockless bower anchors		Stud link chain cable for bower anchors		
			Number	Mass per anchor	Length	Diameter	
						Grade 2	Grade 3
	Equal to or greater than	Less than		*kg*	*m*	*mm*	*mm*
-	-	1790	2	14150	1017.5	105	84
*DG*2	1790	1930	2	14400	990	105	84
*DG*3	1930	2080	2	14800	990	105	84
*DG*4	2080	2230	2	15200	990	105	84
*DG*5	2230	2380	2	15600	990	105	84
*DH*1	2380	2530	2	16000	990	105	84
*DH*2	2530	2700	2	16300	990	105	84
*DH*3	2700	2870	2	16700	990	105	84
*DH*4	2870	3040	2	17000	990	105	84
*DH*5	3040	3210	2	17600	990	105	84
*DJ*1	3210	3400	2	18000	990	105	84
*DJ*2	3400	3600	2	18300	990	106	84
*DJ*3	3600	3800	2	19000	990	107	85
*DJ*4	3800	4000	2	19700	962.5	108	87
*DJ*5	4000	4200	2	20300	962.5	111	90
*DK*1	4200	4400	2	21100	962.5	114	92
*DK*2	4400	4600	2	22000	962.5	117	95
*DK*3	4600	4800	2	22900	962.5	119	97
*DK*4	4800	5000	2	23500	962.5	122	99
*DK*5	5000	5200	2	24000	935	125	102
*DL*1	5200	5500	2	24500	907.5	130	105
*DL*2	5500	5800	2	25000	907.5	133	107
*DL*3	5800	6100	2	25500	880	137	111
*DL*4	6100	6500	2	25700	880	140	113
*DL*5	6500	6900	2	26000	852.5	143	115
*DM*1	6900	7400	2	26500	852.5	147	118
*DM*2	7400	7900	2	27000	825	152	121
*DM*3	7900	8400	2	27500	825	154	123
*DM*4	8400	8900	2	28000	797.5	158	127
*DM*5	8900	9400	2	28900	770	162	132
*DN*1	9400	10000	2	29400	770		135
*DN*2	10000	10700	2	29900	770		139
*DN*3	10700	11500	2	30600	770		143
*DN*4	11500	12400	2	31500	770		147

Equipment letter	Equipment number EN_1		High holding power stockless bower anchors		Stud link chain cable for bower anchors		
			Number	Mass per anchor	Length	Diameter	
						Grade 2	Grade 3
	Equal to or greater than	Less than		*kg*	*m*	*mm*	*mm*
*DN*5	12400	13400	2	33200	770		152
*DO*1	13400	14600	2	35000	770		157
-	14600	-	2	38000	770		162

C14.4 Towing and Mooring Arrangement

C14.4.1 General

C14.4.1.1 Applications and Definitions

1 The design process for the towing fittings including the tow lines is shown in **Fig. C14.4.1-1**. This flow chart is a standard method for the selection of the tow line and towing fittings, and for the design of the towing fittings and their supporting hull structures, and is not intended to cover everything that may be expected at the time of newbuilding or in service of ships.

Fig. C14.4.1-1 Standard Design and Selection Process for Tow Lines, Towing Arrangements and Supporting Hull Structures (for reference only)

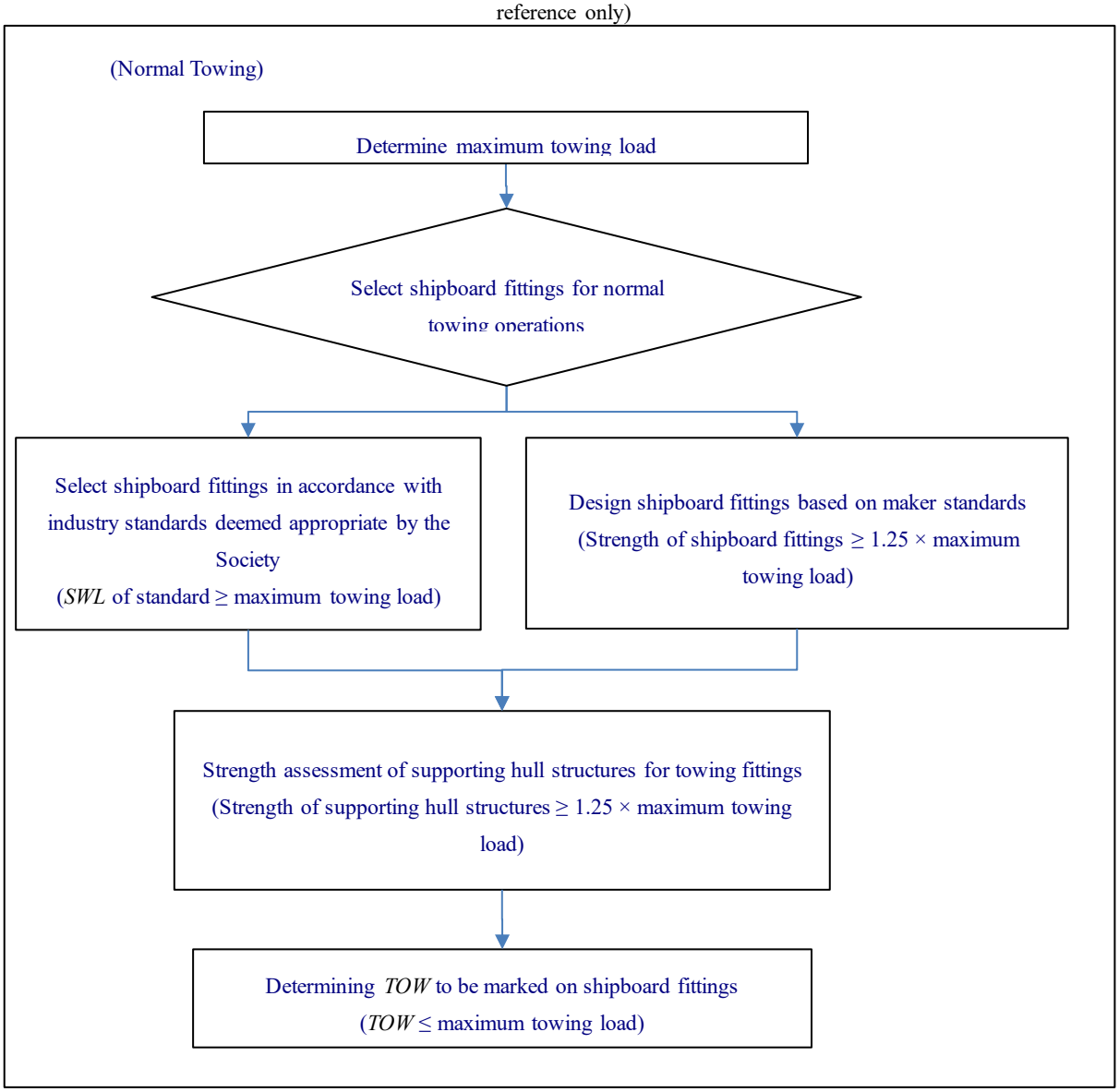

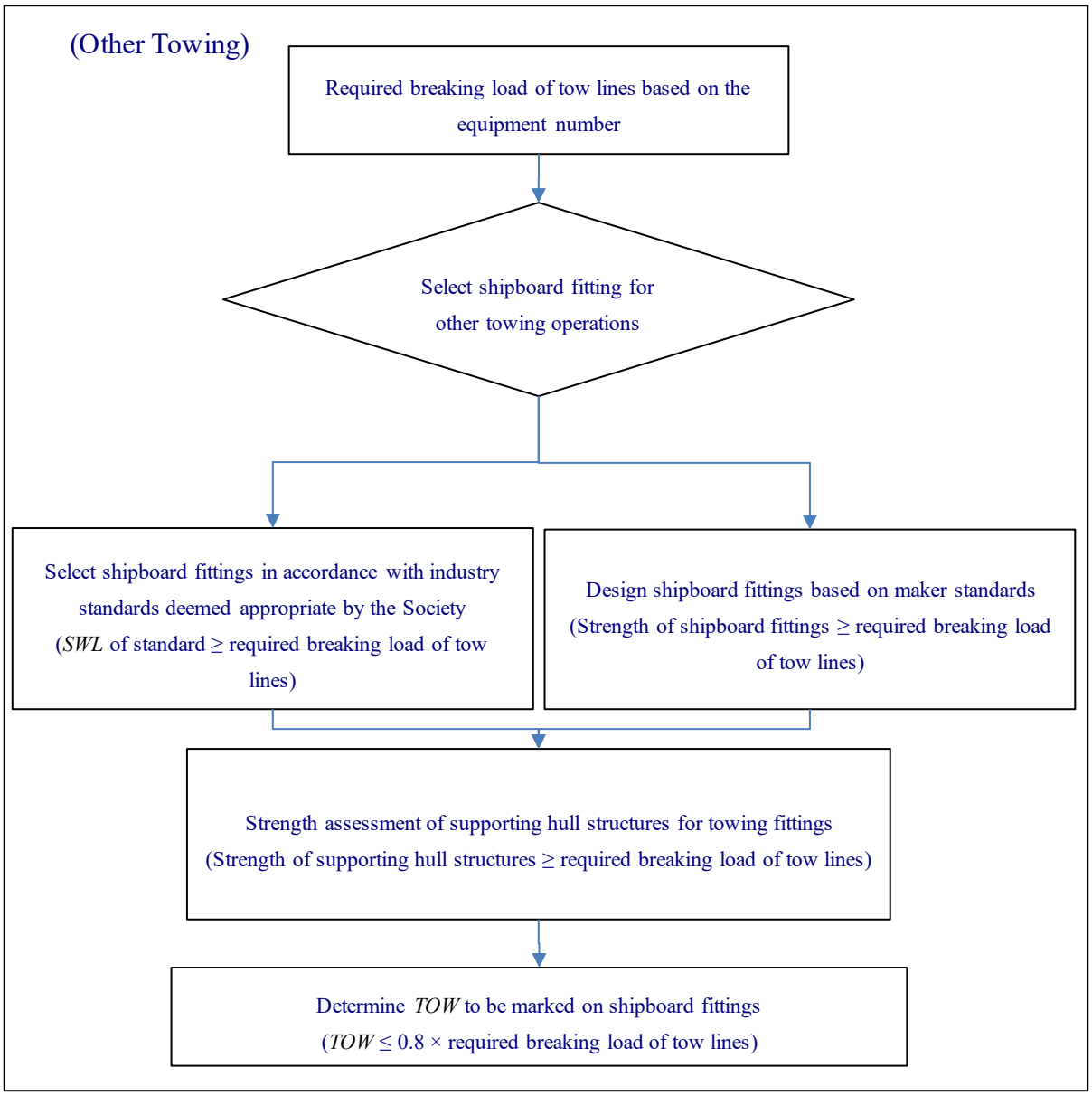

2 The design process for the mooring fittings including the mooring lines is shown in **Fig. C14.4.1-2**. This flow chart is a standard method for the selection of the mooring line and mooring fittings, and for the design of the mooring fittings and their supporting hull structures, and is not intended to cover everything that may be expected at the time of newbuilding or in service of ships.

Fig. C14.4.1-2 Standard Design and Selection Process for Mooring Lines, Mooring Arrangements, Mooring Winches and Supporting Hull Structures (for reference only)

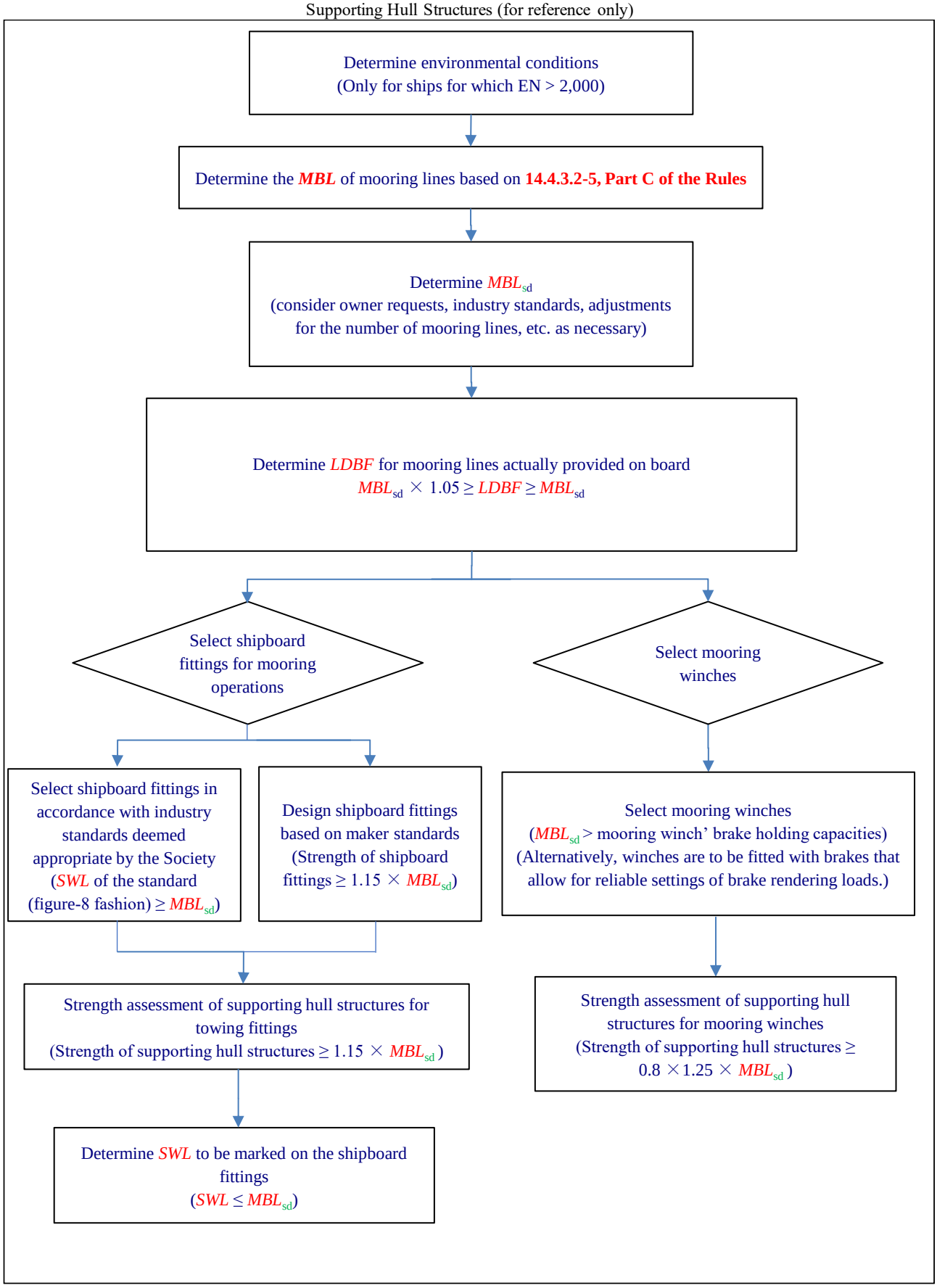

C14.4.2 Towing

C14.4.2.2 Towing Fittings

Towing arrangements are recommended as follows.

(1) Tow lines are to be led through a closed chock. The use of open fairleads with rollers or closed roller fairleads is to be avoided.

(2) It is recommended to provide at least one chock close to centreline of the ship forward and aft. It is beneficial to provide additional chocks on port and starboard side at the transom and at the bow.

(3) Tow lines are to have a straight lead from the towing bitt or bollard to the chock. Bitts or bollards serving, chocks are to be located slightly offset and at a distance of at least 2 *m* away from the chock. (*See* **Fig. C14.4.2-1**)

(4) Warping drums are to be positioned not more than 20 *m* away from chocks as far as practicable, measured along the path of the line.

(5) Attention is to be given to the arrangement of the equipment for towing and mooring operations in order to prevent interference of mooring and tow lines as far as practicable.

Fig. C14.4.2-1

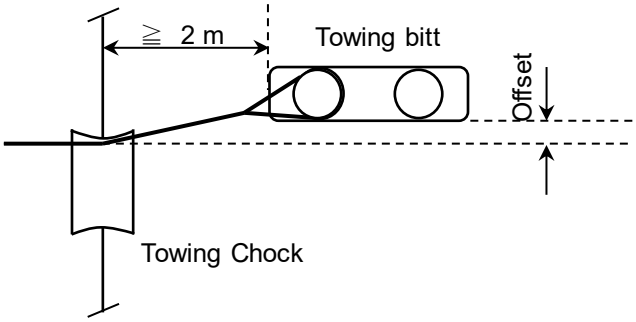

C14.4.3 Mooring

C14.4.3.2 Mooring Lines

1 MBL_{sd} can be calculated by Direct mooring analyses.

2 For the methodology of direct mooring analyses, *See* **IACS Rec No.10**.

C14.4.5 Inspection and Maintenance of Mooring Equipment Including Mooring Lines

C14.4.5.1 Management Plans for Inspection and Maintenance of Mooring Equipment Including Mooring Lines

The wording "deemed appropriate by the Society" in **14.4.5.1, Part 1, Part C of the Rules** means those which are in accordance with **B2.1.6-10, Part B of the Guidance**.

C14.5 Equipment Numbers and Emergency Towing Arrangements

C14.5.1 Equipment Numbers

C14.5.1.1 Calculation of Equipment Numbers

1 Measurement of breadth of structures for second term of the formula in **14.5.1.1, Part C of the Rules**.

(1) Structures are to be treated as separated above and below by a deck level. A continuous superstructure or deckhouse situated on one tier is to be treated as a single structure irrespective of the mode of variation of their breadth and height, continuous or discontinuous, and the breadth is to be the largest one as shown in **Fig. C 14.5.1-1**.

(2) As for detached independent deckhouses on one tier, breadths of respective deckhouses are to be measured separately to determine whether they are to be included or not. (*See* **Fig. C14.5.1-2**)

(3) Where a deckhouse having a breadth greater than *B*/4 is above a deckhouse with a breadth of *B*/4 or less, the narrow deckhouse may be ignored. (*See* **Fig. C14.5.1-3**)

(4) When calculating *h*, sheer and trim are to be ignored. (*See* **Fig. C14.5.1-4**)

Fig. C14.5.1-1

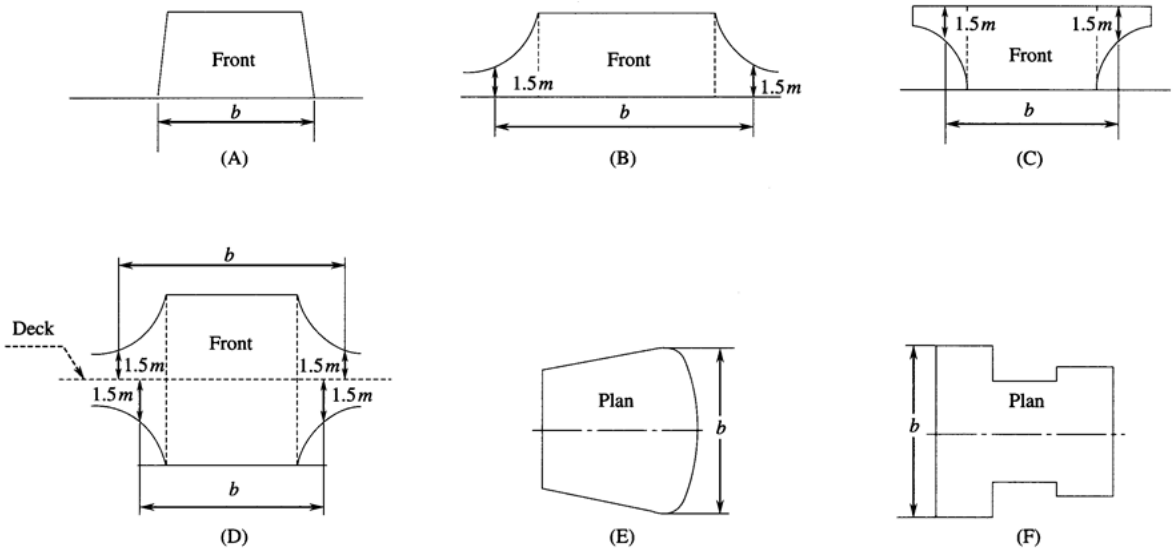

Fig. C14.5.1-2

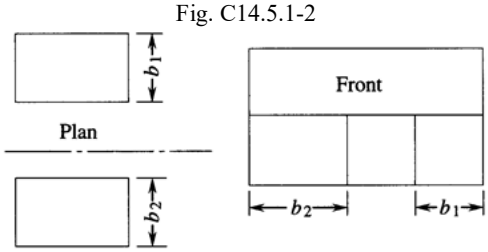

Note:

If both b_1 and b_2 are less than $B/4$, they are not to be included (irrespective of the sum b_1+b_2)

Fig. C14.5.1-3

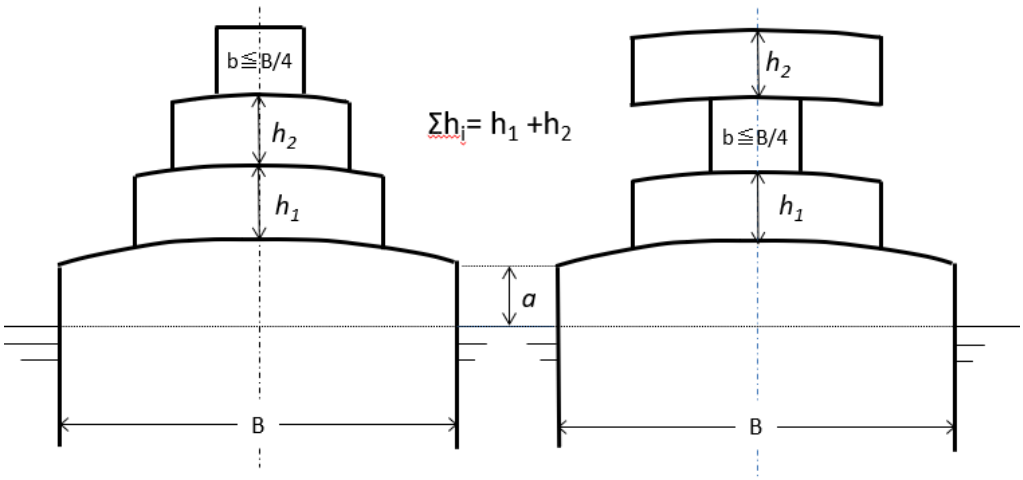

Fig. C14.5.1-4

$$\sum h' = h_1 + h_2 + h_3$$

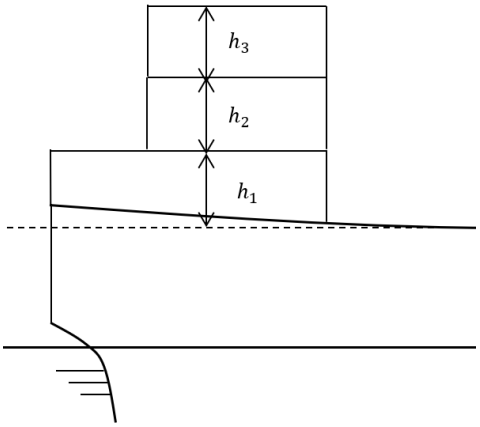

2 Side projected area A may be in accordance with following **(1)** and **(2)**.

(1) The area of deck camber may disregarded when determining side projected area A.

(2) Side projected area A may be calculated using following formula.

(a) A is the value obtained from the following formula:

$aL_2 + \sum h''\ell$

$\Sigma h''\ell$: Sum of the products of the height h'' (m) and length ℓ (m) of superstructures, deckhouses, trunks or funnels which are located above the uppermost continuous deck within L_2 and also have a breadth greater than $B/4$ and a height greater than 1.5 m

(b) Structures are to be treated as separated above and below by a deck level. A continuous superstructure or deckhouse situated on one tier is to be treated as a single structure irrespective of the mode of variation of their breadth and height, continuous or discontinuous. The length of the single structure is to be the value at the largest point. However, if the height is not more than 1.5 m, the part of the single structure is to be ignored. (*See* **Fig. C14.5.1-5**)

(c) h'' is the height (m) at the centreline of each tier of deckhouses having a breadth greater than $B/4$.

(d) Where two or more deckhouses stand side by side transversely, $h''\ell$ may be the projected area on the plane of longitudinal section. (*See* **Fig. C14.5.1-6**) Screens and bulwark are to be treated in the same manner.

(3) The following items may be excluded from ship side projected area A:

(a) portions outside the fore and aft ends of L

(b) derrick posts, ventilators, etc. in continuation with superstructures or deckhouses

(c) cargoes loaded on decks

Fig. C14.5.1-5

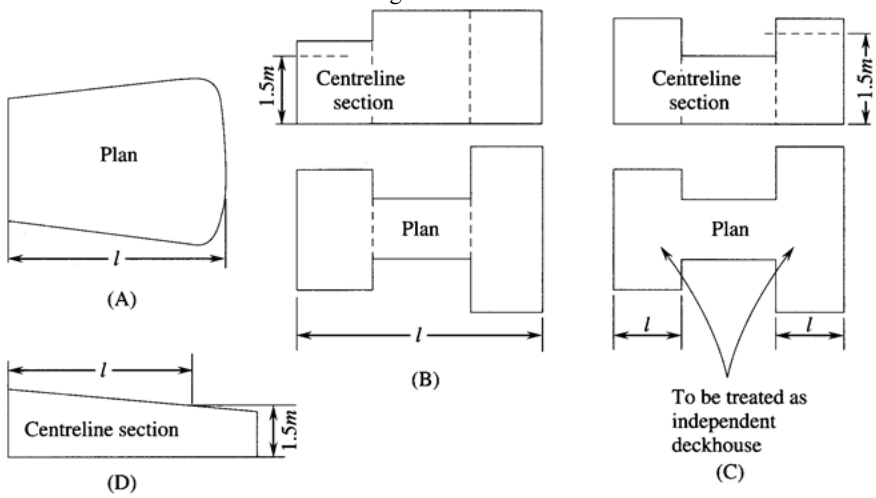

Fig. C14.5.1-6

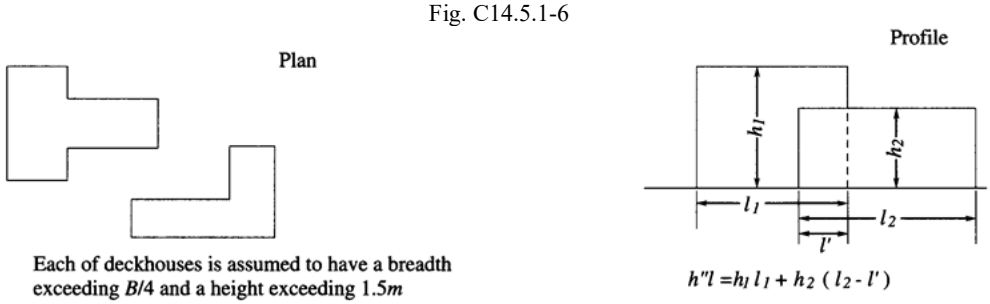

Each of deckhouses is assumed to have a breadth exceeding $B/4$ and a height exceeding $1.5m$

Appendix C1 REFERENCE DATA FOR DESIGN

1.1 Connection of Rudder Stock and Rudder Main Piece Using Cone Coupling with Key (13.2.8.3, Part 1 of Part C of the Rules)

1.1.1

Where the rudder stock is connected to the main piece using the cone coupling with a slugging nut and key and all of the rudder torque is transmitted by the key, the standard necessary push-up force and the push-up length are as determined by the following formula;

Push-up force F:

$$F = \frac{2T_R f_{S1}}{\mu_2 d_m}\left(\mu_1 + \frac{1}{2k}\right) \ (kN)$$

Push-up length $\Delta\ell$:

$$\Delta l = 4k\left[\frac{T_R f_{S1} \times 10^3}{\pi E \mu_2 d_m l(1-c^2)} + R_t\right] \ (mm)$$

Permissible push-up length Δl_{perm}:

$$\Delta l_{perm} = 2k\left(\frac{d_m \sigma_Y}{E\sqrt{3+c^4} f_{S2}} + 2R_t\right) \ (mm)$$

Where:

d_m: Mean diameter (mm) of cone

d_c: Outer diameter (mm) of gudgeon at middle height of cone

c: As given by the following formulae:

$c = d_m / d_c$

μ_1: Coefficient of friction against push-up, may normally be taken as 0.14

μ_2: Coefficient of friction against slip, may normally be taken as 0.15

R_t: Mean roughness of the contact surface, may normally be taken as 0.01 mm

k: Inverse number of cone taper on diameter (12 to 20)

E: Young's modulus of the materials of rudder stock and gudgeon, be taken as 2.06×10^5 (N/mm^2) for steel

σ_Y: Yield stress (N/mm^2) of the material of gudgeon

f_{S1}: Coefficient, to be taken as 0.5 or over

f_{S2}: Safety factor against strength of the gudgeon, to be taken as not less than 1.25

Special consideration is to be made for couplings that are under a large bending moment in addition to the rudder torque such as those of rudder type *C*.

l: Taper length (mm) of cone

1.2 Thickness of Sleeves and Bushes (13.2.10, Part 1 of Part C of the Rules)

1.2.1

As for the thickness of sleeves and bushes at the pintle bearing part and neck bearing part, their standard thicknesses are to be as obtained from the following formulae, where sleeves are metallic and bushes are of lignum vitae or synthetic resin. The thicknesses of sleeves and bushes are as in 13.2.10.1, Part 1 of Part C of the Rules.

(1)

(a) Thickness of pintle sleeve

$0.03d_{PO} + 5 \ (mm)$

Where:

d_{PO}: Diameter (mm) of pintle measured at outside of sleeve

(b) Thickness of bush of pintle bearing

$d_{PO} < 300: 0.05d_{PO} + 5 \ (mm)$

$d_{PO} \geq 300: 0.03d_{PO} + 11 \ (mm)$

Where:

d_{PO}: As per **(1)(a)** above

(2)

(a) Thickness of rudder stock sleeve at neck bearing

$0.03d_l + 3 \ (mm)$

Where:

d_l: Diameter of lower stock (mm)

(b) Thickness of bush of neck bearing

$d_l < 300: 0.05d_l + 2 \ (mm)$

$d_l \geq 300: 0.03d_l + 8 \ (mm)$

Where:

d_l: As per **(2)(a)** above

1.3 Prevention of Vibrations of Tanks in Aft Part

1.3.1

Panels with stiffeners in tanks in the aft part are to be so constructed that the natural frequencies H_1 and H_2 calculated by the following two formulae are greater than $2.2n_pN$.

$$H_1 = \frac{725}{\alpha_S}\sqrt{\frac{t^3}{24.65t + C\sqrt{\alpha_S}}} \ (rpm)$$

$$H_2 = \frac{4825K}{\ell^2\sqrt{1 + \frac{C\ell\beta_n}{24.65t_e\sqrt{1+\beta_n{}^2}}}} \ (rpm)$$

Where:

α_S: As given by the following formulae:

$$\alpha_S = \frac{\beta^2 S^2}{1+\beta^2}$$

S: Stiffener spacing (m)

β: As given by the following formulae:

$$\beta = \frac{\ell}{S}$$

t: Plate thickness (mm)

C: Coefficient, to be equal to 1,000 if only one side is in contact with water or 2,000 if both sides are in contact with water

K: As given by the following formulae:

$$K = \sqrt{\frac{I}{A}}$$

I: Moment of inertia (cm^4) of section of a stiffener with attached plate

A: Sectional area (cm^2) of a stiffener with attached plate

ℓ: Length (m) of side of panel in parallel with stiffeners

β_n: As given by the following formulae:

$$\beta_n = \frac{(n+1)S}{l}$$

n: Number of stiffeners

t_e: Apparent thickness (mm) of plating to be obtained from the following formula:

$$t_e = t + \frac{A_S n}{10(n+1)S}$$

A_S: Sectional area (cm^2) of a stiffener not including attached plate

n_p: Number of blades of propeller

N: Rate of revolutions (rpm) of propeller

Fig. 1

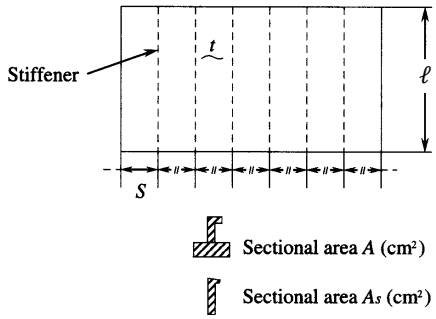

Appendix C2 DETAIL GUIDE FOR PREPARATION OF LOADING MANUAL

1.1 Method of Calculation of Longitudinal Strength for Loading Conditions Different from Standard Loading Conditions

1.1.1 Check Items for Longitudinal Strength

Calculation and confirmation of longitudinal strength for loading conditions different from the standard loading conditions are to be made on the following items in accordance with the procedures given in the flow chart below (*See* **Fig. 1**) for each point of output.

(1) Ships without longitudinal bulkheads

(a) Vertical still water bending moment M_{SV}

(b) Vertical still water shear force Q_{SV}

(c) Vertical still water shear force for alternate loading Q_{SV_C} (Q_{SV} corrected for alternate loading)

However, where the ship's design does not take into account load sharing by the double bottom, the shear force for alternate loading does not need to be checked.

(2) Ships with one or four rows of longitudinal bulkhead

(a) Vertical still water bending moment M_{SV}

(b) Vertical still water shear force Q_{SV}

(c) Vertical shear force of longitudinal bulkhead Q_{SV_L} (shear force acting on the longitudinal bulkhead taking into account the local load)

Fig. 1 Flow Chart for Checking Longitudinal Strength

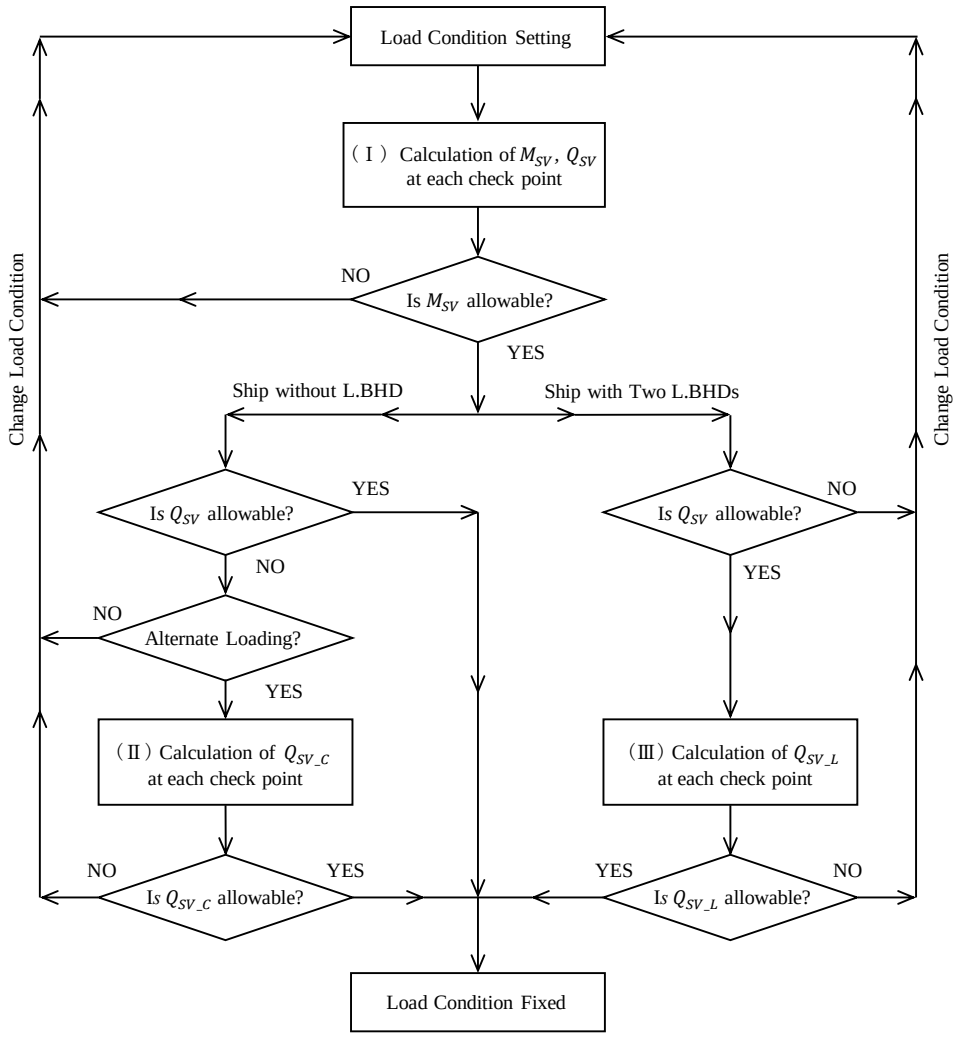

1.1.2 Point of Output for Checking Longitudinal Strength

1 The vertical still water bending moment are to be arranged in accordance with the requirements of **4.3.2.2-2, Part 1 of Part C of the rules** at each point of output.

2 The points of output of vertical still water shear force are to be arranged at fore and aft bulkheads of cargo loaded compartments, the transverse bulkheads between these bulkheads, and/or similar spaces. However, where the distance between transverse bulkheads is small, such as with cofferdams, the strength check of one of the bulkheads may be omitted. Also, the strength check may be omitted where the shear force is considered to be small.

1.1.3 Grouping of Loads in Calculation

1 Loads in those tanks symmetrically arranged on both sides of a ship may be summarized in the same group in calculation.

2 Where multiple hatch openings are provided for one cargo hold, calculation is to be made for each hatch opening. However, where separation according to the type of cargo is unnecessary, the calculation may be made by hold.

1.1.4 Procedure for Checking Longitudinal Strength

1 In order to easily check the allowable cargo load, the relation between loading and longitudinal strength, and the procedure for checking longitudinal strength are to be explained by using a flow chart or other suitable means. Descriptive examples are shown in **1.6** and **1.7**.

2 The following allowable values corresponding to the values calculated in **1.1.1** above are to be clearly specified so that the ship master can judge the adequacy of cargo loading without making mistakes.

(1) Allowable value for vertical still water bending moment (allowable value of M_{SV})

(2) Allowable value for vertical still water shear force (allowable value of Q_{SV})

(3) Allowable value for vertical shear force of longitudinal bulkhead (allowable value of Q_{SV_L})

These allowable values are to be those calculated in accordance with the requirements of **4.3.2.2-3, Part 1 of Part C of the Rules** at each point of output. The allowable values for ships in port are not to be included in the calculation form.

3 Terms and expressions used for describing the calculated values and allowable values are to be the same as used in **1.1.1(1)**, **(2)** and **1.1.4-2**.

1.1.5 Method of Calculation

1 Calculation of vertical still water bending moment M_{SV} and vertical still water shear force Q_{SV}

Vertical still water bending moment and vertical still water shear force are to be determined based upon direct calculation as far as possible.

2 Calculation of vertical still water shear force for alternate loading Q_{SV_C}

Corrective calculations for where the adjoining holds are alternately loaded are to be made according to the method given in **1.9**.

3 Calculation of vertical still water shear force on longitudinal bulkheads Q_{SV_L}

Calculations of vertical still water shear force to be shared by the longitudinal bulkhead for ships with one or four rows of longitudinal bulkheads are to be made according to the method given in **1.10**.

4 The Loading Manual is to be appended with these examples of calculation.

1.2 Descriptive Example 1 of Allowable Values for Vertical Still Water Bending Moment and Vertical Still Water Shear Force (Ships without Longitudinal Bulkheads)

1.2.1 Allowable Values for Vertical Still Water Bending Moment and Vertical Still Water Shear Force

The allowable values for vertical still water bending moment and vertical still water shear force of the ship at sea and in port are shown in the following **Table 1**, **Table 2** and **Fig. 2**.

1.3 Descriptive Example 2 of Allowable Values for Vertical Still Water Bending Moment and Vertical Still Water Shear Force (Ships with One or Four Rows of Longitudinal Bulkheads)

1.3.1 Allowable Values for Vertical Still Water Bending Moment and Vertical Still Water Shear Force

The allowable values for vertical still water bending moment and vertical still water shear force of the ship at sea and in port are shown in the following **Table 3**, **Table 4** and **Fig. 3**.

Table 1 For Conditions at Sea

Point of output	Allowable value of vertical still water bending moment (*kN-m*)		Allowable value of vertical still water shear force (*kN*)	
	Positive	Negative	Positive	Negative

Table 2 For Conditions in Port

Point of output	Allowable value of vertical still water bending moment (*kN-m*)		Allowable value of vertical still water shear force (*kN*)	
	Positive	Negative	Positive	Negative

Note:

The positive allowable value is shown in **Fig. 2**.

Fig. 2 Descriptive Example 1 of Allowable Values for Vertical Still Water Bending Moment and Vertical Still Water Shear Force (Ships without Longitudinal Bulkheads)

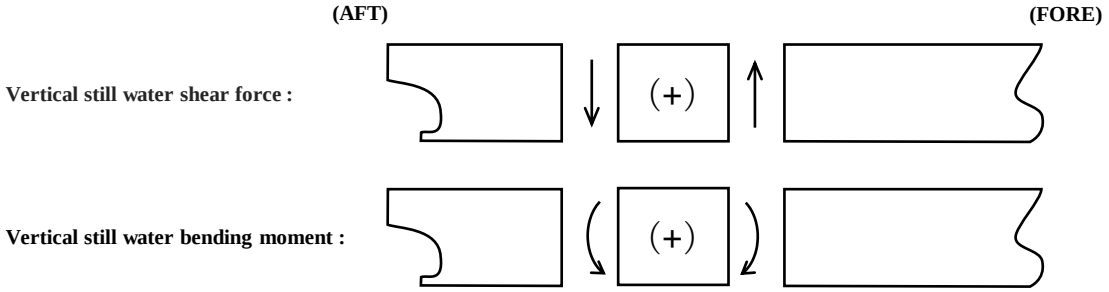

Table 3 For conditions at sea

Point of output	Allowable value of vertical still water bending moment (*kN-m*)		Allowable value of vertical still water shear force (*kN*)		Allowable value of vertical still water shear force for longitudinal bulkhead (*kN*)	
	Positive	Negative	Positive	Negative	Positive	Negative

Table 4 For conditions in port

Point of output	Allowable value of vertical still water bending moment (*kN-m*)		Allowable value of vertical still water shear force (*kN*)		Allowable value of vertical still water shear force for longitudinal bulkhead (*kN*)	
	Positive	Negative	Positive	Negative	Positive	Negative
Note: The positive allowable value is shown in **Fig. 3**.						

Fig. 3 Descriptive Example 1 of Allowable Values for Vertical Still Water Bending Moment and Vertical Still Water Shear Force (Ships with One or Four Rows of Longitudinal Bulkheads)

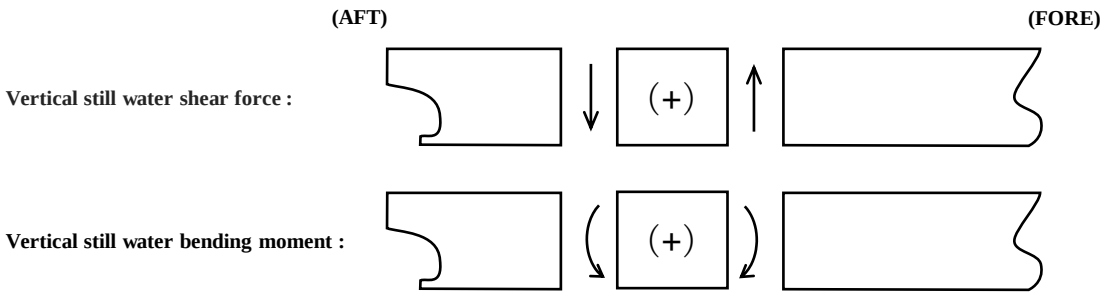

1.4 Descriptive Example of Stresses

1.4.1 Stress on Hull

1 Vertical bending stress σ

The section modulus Z of the midship point of L calculated on the basis of the original as-built scantlings is as follows:

$$Z_{ACT(DECK\ SIDE)} = 86.642\ (m^3)$$

Vertical bending stresses σ under various conditions of the ship on the basis of the above section modulus are as follows:

$$\sigma = \frac{M\ (kN\text{-}m)}{Z\ (m^3)} \times \frac{1}{1000} = \frac{M}{86642}\ (N/mm^2)$$

(1) The positive allowable value for vertical still water bending moment of the ship M_{SV} is 5,750,000 *kN-m*, and its corresponding vertical bending stress (σ_{SV}) is as follows:

$$\sigma_{SV} = \frac{5750000}{86642} = 66\ (N/mm^2)$$

In other words, the vertical bending stress in calm seas is 66 N/mm^2 or less providing that loading is properly done.

(2) Where the ship is in open seas, the wave induced vertical bending moment acts on the ship and the corresponding bending stress is added to **(1)** above. Where the vertical wave bending moment ($M_{WV-h} = 9{,}410{,}000$ *kN-m*) specified in the Rules is added to the vertical bending stress σ_{WV} becomes as follows:

$$\sigma_{WV} = \frac{M_S + M_{WV-h}}{86462} = \frac{15160000}{86642} = 175\ (N/mm^2)$$

(3) The bending stress σ_{PT} corresponding to the positive allowable vertical still water bending moment in harbour conditions M_{PT} (10,455,000 *kN-m*) is as follows:

$$\sigma_{PT} = \frac{10455000}{86642} = 121\ (N/mm^2)$$

2 Shear stress (τ)

The shear stress τ, where the wave induced vertical shear force specified in the Rules acts on the ship is 110 N/mm^2 or below provided that loading is properly done.

1.5 Descriptive Example of Standard Loading Conditions

Descriptive examples of standard loading conditions are shown in **Fig. 4**.

Fig. 4 Descriptive Example of Standard Loading Conditions

CONDITION NO.20
NORMAL BALLAST CONDITION DEPARTURE

DISPLACEMENT		*t*	170000
DRAFT AT C.F.		*m*	11.54
DRAFT	FORE	*m*	9.76
	AFT	*m*	13.69
	MEAN	*m*	11.73
TRIM		*m*	3.93
⊗ G		*m*	13.50
⊗ B		*m*	20.20
⊗ F		*m*	17.00
MTC		*t-m*	2933.1
KM		*m*	29.92
KG		*m*	15.88
GM		*m*	14.04
GG_0		*m*	0.91
G_0M		*m*	13.13
PROPELLER IM MERSION （ID）		%	132
DETAIL OF DEADWEIGHT			
CARGO OIL		*t*	130750
FUEL OIL		*t*	0
BALLAST OIL		*t*	408
DIESEL OIL		*t*	334
FRESH WATER		*t*	490
CONSTANT		*t*	508
OTHERS PROVISIONS		*t*	0
DEADWEIGHT TOTAL		*t*	132490
LONGITUDINAL STRENGTH			
MAX.BENDING MOMENT （at FR86）		*kN-m*	149334
MIN.BENDING MOMENT （at FR106）		*kN-m*	−22038
MAX.SHEAR FORCE （at FR96）		*kN*	1857
MIN.SHEAR FORCE （at FR51）		*kN*	−3539
STABILITY			
G Z MAX.		*m*	7.68
ANGLE OF G Z （MAX.）		*deg.*	38.2

STATICAL STABILITY CURVE

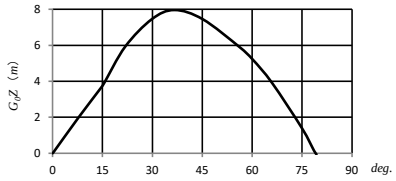

WEIGHT CONDITIONS

	CARGO OIL										
TANK	NO.1CT(C)	NO.2CT(C)	NO.3CT(C)	NO.4CT(C)	NO.5CT(C)	NO.1CT(P/S)	NO.2CT(P/S)	NO.3CT(P/S)	NO.4CT(P/S)	NO.5CT(P/S)	SLOPT
WEIGHT (*t*)	20681	0	24642	0	23885	0	30771	0	30771	0	0
VOL/CUP (%)	98	0	98	0	98	0	98	0	98	0	0

	BALLAST WATER							
TANK	FTP	NO.1WBT	NO.2WBT	NO.3WBT	NO.4WBT	NO.5WBT	E/R WBT	APT
WEIGHT (*t*)	0	0	0	0	0	0	0	0
VOL/CUP (%)	0	0	0	0	0	0	0	0

	FRESH WATER		FUEL OIL		DIESEL OIL	
TANK	DRWT	FRWT	NO.1FOT	NO.2FOT	NO.1DOT	NO.2DOT
WEIGHT (*t*)	245	245	408	0	167	167
VOL/CUP (%)	96	96	12	0	96	96

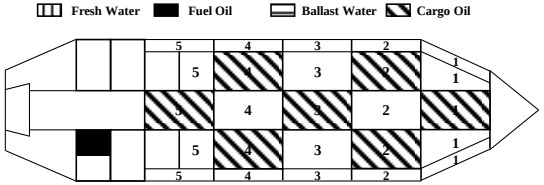

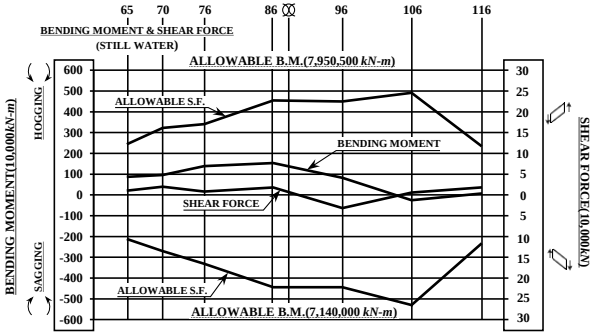

1.6 Descriptive Example 1 on the Procedure of Calculation of Vertical Still Water Bending Moment and Vertical Still Water Shear Force (Ships without Longitudinal Bulkheads)

1.6.1 Adjustments in Loading and Judging Procedure

Where the loading condition differs from the standard loading condition, vertical still water bending moment M_{SV} and vertical still water shear force Q_{SV}, Q_{SV_C} are to be obtained by the procedures stated below, and the loading condition is to be adjusted so that the values obtained above do not exceed the respective allowable values. The allowable values incorporate the tolerances of the structural strength of each part of the hull in regards to stresses due to foreseen vertical bending moments and vertical shear forces for voyages in open seas. Therefore, the strength of the ship at sea can be ensured so far as the values of M_{SV}, Q_{SV} and Q_{SV_C} at each point of output do not exceed the corresponding allowable values.

The vertical bending moment and vertical shear force to be checked are as follows:

Vertical still water bending moment M_{SV}

Vertical still water shear force Q_{SV}

Vertical still water shear force in alternate loading Q_{SV_C}

Details of the procedure to obtain the values of Q_{SV}, $Q_{SV_C}$and M_{SV} will be explained in **1.8** and **1.9**, and the method for checking these values is to be made according to the following procedure (*See* Flow Chart in **Fig. 5**).

(1) Calculate the values of M_{SV} and Q_{SV} at each point of output through the use of the form as shown in **1.8** by giving the loads in each cargo hold and tank.

(2) Check if the values of M_{SV} at each point of output exceed the allowable value of M_{SV} shown in **1.2**. If they are verified to be in the range between the positive and negative allowable values, proceed to the next step. Where they exceed the allowable values, the loading condition requires adjustment.

(3) Check if the values of Q_{SV} at each point of output obtained in **(1)** exceed the allowable value of Q_{SV} shown in **1.2**. If they are verified to be in the range between the positive and negative allowable values, the loading condition may be acceptable. Where they exceed the allowable values, proceed to the next step.

(4) Check if the point of output exceeding the allowable value of Q_{SV} is where the cargo is an alternate loading condition. If not, the loading condition requires adjustment. If so, proceed to the next step.

(5) On points of output exceeding the allowable value of Q_{SV}, calculate Q_{SV_C} through the use of the form shown in **1.9**.

(6) Where values of Q_{SV_C} are in the range between the positive and negative allowable value of Q_{SV}, the loading condition may be accepted. When Q_{SV_C} exceeds the allowable value of Q_{SV}, loading condition requires adjustment.

Fig. 5 Flow Chart for Checking Longitudinal Strength (Ships without Longitudinal Bulkheads)

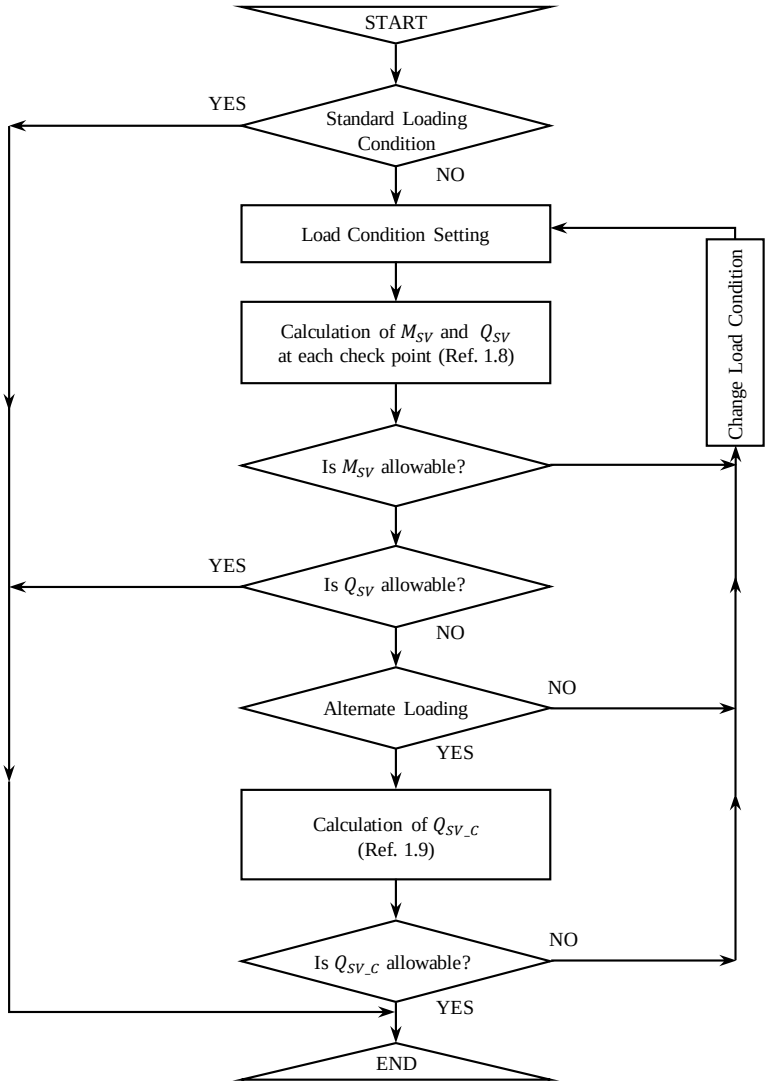

1.7 Descriptive Example 2 on the Procedure of Calculation of Vertical Still Water Bending Moment and Vertical Still Water Shear Force (Ships with One or Four Rows of Longitudinal Bulkheads)

1.7.1 Adjustments in Loading and Judging Procedure

Where the loading condition differs from the standard loading condition, the vertical still water bending moment M_{SV} and vertical still water shear force Q_{SV}, Q_{SV_L} are to be obtained by the procedures stated below, and the loading condition is to be adjusted so that the values obtained above do not exceed the respective allowable values. The allowable values incorporate the tolerances of the structural strength of each part of the hull in regards to stresses due to foreseen vertical bending moments and vertical shear forces for voyages in open seas. Therefore, the strength of the ship at sea can be ensured so far as the values of M_{SV}, Q_{SV} and Q_{SV_L} at each point of output do not exceed the corresponding allowable values.

The vertical bending moment and shear force to be checked are as follows:

Vertical still water bending moment M_{SV}

Vertical still water shear force Q_{SV}

Vertical still water shear force acting on longitudinal bulkhead Q_{SV_L}

Explanatory notes on details of calculation procedures will be given in **1.8** and **1.10**, but the method for calculation and its verification are to be made according to the following procedures (*See* Flow Chart in **Fig. 6**)

(1) Calculate values of M_{SV} and Q_{SV} at each point of output through the use of the form as shown in **1.8** by giving the loads in

each cargo hold and tank.

(2) Check if the values of M_{SV} at each point of output exceed the allowable value of M_{SV} shown in **1.3**. If they are verified to be in the range between the positive and negative allowable values, proceed to the next step. Where they exceed the allowable values, the loading condition requires adjustment.

(3) Check if the values of Q_{SV} at each point of output obtained in **(1)** exceed the allowable value of Q_{SV} shown in **1.3**. If they are verified to be in the range between the positive and negative allowable values, proceed to the next step. Where they exceed the allowable values, the loading condition requires adjustment.

(4) According to the form shown in **1.10**, calculate Q_{SV_L} at each point of output.

(5) Check if the values obtained in **(4)** above exceed the allowable value of Q_{SV_L} shown in **1.3**. If they are verified to be in the range between the positive and negative allowable values, the loading condition may be accepted. Where they exceed the allowable values, the loading condition requires adjustment.

Fig. 6 Flow Chart for Checking Longitudinal Strength (Ships with One or Four Rows of Longitudinal Bulkheads)

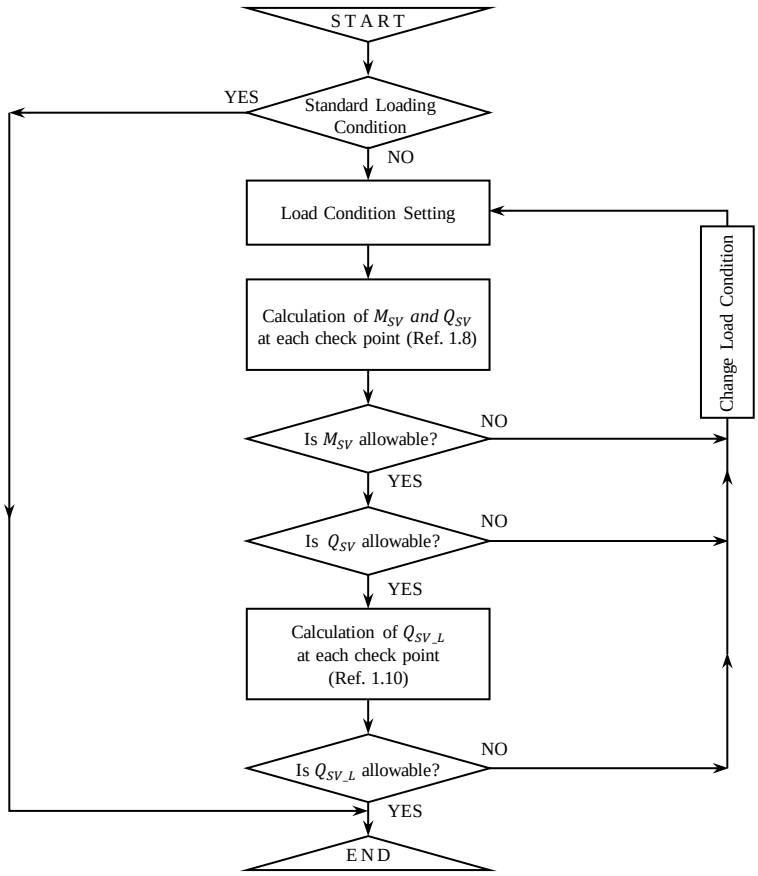

(Load Condition Fixed)

1.8 Method of Calculation of Vertical Still Water Bending Moment and Vertical Still Water Shear Force

1.8.1 General explanation

With this method of longitudinal strength calculation, the vertical still water bending moment and vertical still water shear force at various locations on the hull for actual loading conditions can be obtained.

The method of longitudinal strength calculation and expressions used are as follows:

$\sum W$: Integral value of deadweight from the fore end of L to each point of output (shear force due to deadweight (*kN*))

SS: Integral value of 'buoyancy−light weight' from the fore end of L to each point of output (shear force due to 'buoyancy−light weight' (*kN*))

$\sum M$: Double integral value of deadweight from the fore end of L to each point of output (bending moment due to deadweight

(*kN-m*))

SB: Double integral value of buoyancy and the ship's weight from the fore end of L to each point of output (bending moment due to buoyancy and the ship's light weight (*kN-m*))

The longitudinal still water shear force Q_{SV} and still water bending moment M_{SV} at each point of output can be calculated by the following formulae:

$$Q_{SV} = \left(SS - \sum W\right) \times 9800 \ (kN)$$

$$M_{SV} = \left(\sum M - SB\right) \times 9800 \ (kN\text{-}m)$$

Q_{SV} and M_{SV} are positive/negative according to each allowable value, as shown in **Fig. 7**.

In this method of longitudinal strength calculation, the shear forces (*SS*) and the bending moments (*SB*) due to buoyancy and the ship's light weight are calculated for every metre of draught and the longitudinal strength data (a list of shear forces and bending moments for respective set-up draughts) is prepared. In **Table 5**, an example of the numerical table for one set of specific draughts is given.

Accordingly, by calculating only the shear force and bending moment due to deadweight, the vertical still water shear force Q_{SV} and vertical still water bending moment M_{SV} for each point of output can easily be obtained on board the ship.

Fig. 7 Sign Conventions for Q_{SV} and M_{SV}

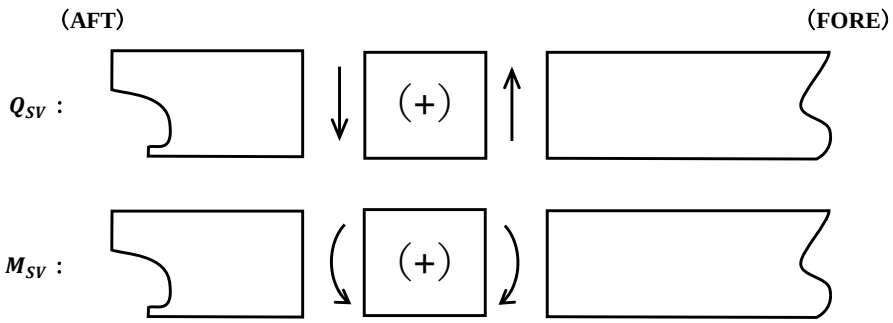

Table 5 LONGITUDINAL STRENGTH DATA **(FOR BUOYANCY & LIGHT SHIP WEIGHT) EACH VALUE SHOWS (ACTUAL VALUE (*t*/1,000) BASE DRAFT 12,000 METER**

	SHEAR FORCE (UNIT MT)				BENDING MOMENT (UNIT MT-M)		
CALCULATION POSITION	BASE VALUE (S.F.)	DRAFT CORRECTION (CD)	TRIM CORRECTION (CT)		BASE VALUE (B.M.)	DRAFT CORRECTION (CD)	TRIM CORRECTION (CT)
FRAME (116)	2.853	0.022	-0.153		20.084	0.166	-1.048
FRAME (106)	31.976	0.196	-1.063		876.054	5.700	-34.254
FRAME (96)	61.970	0.355	-1.536		2871.544	17.445	-90.924
FRAME (86)	100.459	0.559	-1.653		7322.246	42.534	-181.031
FRAME (76)	130.269	0.719	-1.362		12252.008	69.816	-246.525
FRAME (70)	157.848	0.889	-0.678		18944.238	107.158	-295.168
FRAME (65)	164.621	0.946	-0.365		21784.430	123.139	-304.240

1.8.2 Procedure for Calculation of Longitudinal Strength

The calculation of longitudinal strength may be conducted by filling up the spaces given in **Table 6**. The procedure is given as follows:

(1) After draught (*DA*) and trim

The after draught and trim are to be entered into the relevant spaces when calculating the longitudinal strength.

Where there is a trim by the bow, it is to be noted with a negative sign (-).

(2) Base draught (*DB*) and difference of draught (ΔD)

The base draft closest to but not greater than the after draft is to be selected from the longitudinal strength data and entered in the space for the base draught, and the difference between the after draught and the selected base draught is to be entered in the space for the difference (ΔD).

(3) Column for Weight

One-thousandth of the deadweight (t) for each compartment is to be entered in this column.

(4) Column for W_i

This column is for indicating the deadweight in the respective compartments exerted on points of longitudinal strength output, which is obtained by multiplying the deadweight by the ratio (compartment ratio included in each point of output).

(5) Column for M_i

This column is for indicating the moment around the midship which is created by the deadweight in the respective compartments, and here the value of $W_i \times$ [illegible] G is to be entered.

(6) $\sum W_i$ and ΣM_i

The accumulations of W_i and M_i included between the fore end and each point of output are to be entered here.

(7) *SS* and *SB*

SS and *SB* indicate the shear force and the bending moment due to buoyancy and the ship's light weight, and they are to be calculated according to the following procedures:

(a) Correction factors (*CD* and *CT*) based on base value, difference of draught and trim

Enter the value from the space for the base draft (on the longitudinal strength data sheet) in the space for the base value (column **(1)**) for each point of output, as well as the respective correction factors (*CD* and *CT*).

(b) Correction for difference of draught (ΔD) (column **(2)**)

This is to correct the difference between the base draught and the actual draught. The correction is to be made by multiplying the correction factor (*CD*) by the difference of draught (ΔD).

(c) Correction for trim (column **(3)**)

Where the ship has trim, the correction for trim is to be made by multiplying the correction factor (*CT*) by the value of trim (m).

(d) Summation

The base value (column **(1)**), corrected value for the difference of draught (column **(2)**) and the corrected value for trim (column **(3)**) are to be summed up and the sums are to be entered in the spaces for *SS* and *SB*.

(8) $\sum W$ and $\sum M$

$\sum W$ and $\sum M$ indicate the shear force and bending moment due to deadweight respectively which are obtained by the following procedure:

(a) Column for ΣW

ΣW is the accumulation of deadweight at each point of output $\sum W_i$ which is to be entered in this column.

(b) Column for ΣM

$\sum M$ is the bending moment at each point of output converted from the bending moment $\sum M_i$ around the midship due to deadweight at each point of output, and the values obtained from the following formula are to be entered:

$$\sum M \times (corrected\ Lever) + \sum M_i$$

(9) Vertical still water shear force Q_{SV}

Q_{SV} indicates the actual vertical still water shear force under loading condition at each point of output and is obtained from by the following formula:

$$Q_{SV}\left(SS - \sum W\right) \times 9800\ (kN)$$

(10) Vertical still water bending moment M_{SV}

M_{SV} indicates the actual vertical still water bending moment under loading condition at each point of output, and is obtained from the following formula:

$$M_{SV} = \left(\sum M - SB\right) \times 9800\ (kN\text{-}m)$$

Table 6 SHEAR FORCE AND BENDING MOMENT CALCULATION IN STILL WATER

○

AFT DRAFT (DA) : (m)
BASE DRAFT (DB) : (m)
DIFFERENCE (ΔD) = DA−DB : (m)
TRIM : (m)

i	D.W. ITEM	WEIGHT 1/1,000	RATIO	LOAD (W_i)	⊗ G	MOMENT (M_i)
1	FORE PEAK TANK		1.000		152.29	
	FR. 116	$\sum W_i = (\quad)_{i=1}$			$\sum M_i = (\quad)_{i=1}$	
2	No. 1 C.O.T. (C)		1.000		118.64	
3	No. 1 C.O.T. (P/S)		1.000		118.03	
4	No. 1 W.B.T. (P/S)		1.000		121.15	
	FR. 106	$\sum W_i = (\quad)_{i=1\sim4}$			$\sum M_i = (\quad)_{i=1\sim4}$	
5	No. 2 C.O.T. (C)		1.000		71.20	
6	No. 2 C.O.T. (P/S)		1.000		71.20	
7	No. 2 W.B.T. (P/S)		1.000		71.09	
	FR. 96	$\sum W_i = (\quad)_{i=1\sim7}$			$\sum M_i = (\quad)_{i=1\sim7}$	
8	No. 3 C.O.T. (C)		1.000		21.20	
9	No. 3 C.O.T. (P/S)		1.000		21.20	
10	No. 3 W.B.T. (P/S)		1.000		21.20	
	FR. 86	$\sum W_i = (\quad)_{i=1\sim10}$			$\sum M_i = (\quad)_{i=1\sim10}$	
11	No. 4 C.O.T. (C)		1.000		−28.80	
12	No. 4 C.O.T. (P/S)		1.000		−28.80	
13	No. 4 W.B.T. (P/S)		1.000		−28.32	
	FR. 76	$\sum W_i = (\quad)_{i=1\sim13}$			$\sum M_i = (\quad)_{i=1\sim13}$	
14	No. 5 C.O.T. (C)		0.624		−68.13	
15	No. 5 C.O.T. (P/S)		1.000		−68.13	
16	No. 5 W.B.T. (P/S)		0.588		−68.13	
	FR. 70	$\sum W_i = (\quad)_{i=1\sim16}$			$\sum M_i = (\quad)_{i=1\sim16}$	
17	No. 5 C.O.T. (C)		0.376		−91.95	
18	SLOP TANK (P/S)		1.000		−93.63	
19	No. 5 W.B.T. (P/S)		0.412		−93.79	
	FR. 65	$\sum W_i = (\quad)_{i=1\sim19}$			$\sum M_i = (\quad)_{i=1\sim19}$	

	ITEM	SHEAR FORCE (Q)			BENDING MOMENT (M)		
FR.116	BASE VALUE		①			①	
	DRAFT CORRECTION	CD ( ) × Δ D	②		CD ( ) × Δ D	②	
	TRIM CORRECTION	CD ( ) × TRIM	③		CD ( ) × TRIM	③	
	BUOY ANCY & L. W.	①+②+③	SS		①+②+③	SS	
	DEADWEIGHT	$\sum W_i$	$\sum W$		$\sum W_i$	$\sum W$	
	CALCULATED VALUE	(SS − ∑ W) × 9,800			(SS − ∑ W) × 9,800		
	ALLOWABLE VALUE	ALLOWABLE SHEAR FORCE	105,800 − −107,800		ALLOWABLE BENDING MOMENT	2,406,600 − −2,309,400	
FR.106	BASE VALUE		①			①	
	DRAFT CORRECTION	CD ( ) × Δ D	②		CD ( ) × Δ D	②	
	TRIM CORRECTION	CD ( ) × TRIM	③		CD ( ) × TRIM	③	
	BUOY ANCY & L. W.	①+②+③	SS		①+②+③	SS	
	DEADWEIGHT	$\sum W_i$	$\sum W$		$\sum W_i$	$\sum W$	
	CALCULATED VALUE	(SS − ∑ W) × 9,800			(SS − ∑ W) × 9,800		
	ALLOWABLE VALUE	ALLOWABLE SHEAR FORCE	251,900 − −259,000		ALLOWABLE BENDING MOMENT	5,477,200 − −3,339,000	
FR.96	BASE VALUE		①			①	
	DRAFT CORRECTION	CD ( ) × Δ D	②		CD ( ) × Δ D	②	
	TRIM CORRECTION	CD ( ) × TRIM	③		CD ( ) × TRIM	③	
	BUOY ANCY & L. W.	①+②+③	SS		①+②+③	SS	
	DEADWEIGHT	$\sum W_i$	$\sum W$		$\sum W_i$	$\sum W$	
	CALCULATED VALUE	(SS − ∑ W) × 9,800			(SS − ∑ W) × 9,800		
	ALLOWABLE VALUE	ALLOWABLE SHEAR FORCE	223,200 − −226,400		ALLOWABLE BENDING MOMENT	7,013,600 − −5,095,800	
FR.86	BASE VALUE		①			①	
	DRAFT CORRECTION	CD ( ) × Δ D	②		CD ( ) × Δ D	②	
	TRIM CORRECTION	CD ( ) × TRIM	③		CD ( ) × TRIM	③	
	BUOY ANCY & L. W.	①+②+③	SS		①+②+③	SS	
	DEADWEIGHT	$\sum W_i$	$\sum W$		$\sum W_i$	$\sum W$	
	CALCULATED VALUE	(SS − ∑ W) × 9,800			(SS − ∑ W) × 9,800		
	ALLOWABLE VALUE	ALLOWABLE SHEAR FORCE	229,500 − −229,500		ALLOWABLE BENDING MOMENT	7,013,600 − −5,095,800	
FR.76	BASE VALUE		①			①	
	DRAFT CORRECTION	CD ( ) × Δ D	②		CD ( ) × Δ D	②	
	TRIM CORRECTION	CD ( ) × TRIM	③		CD ( ) × TRIM	③	
	BUOY ANCY & L. W.	①+②+③	SS		①+②+③	SS	
	DEADWEIGHT	$\sum W_i$	$\sum W$		$\sum W_i$	$\sum W$	
	CALCULATED VALUE	(SS − ∑ W) × 9,800			(SS − ∑ W) × 9,800		
	ALLOWABLE VALUE	ALLOWABLE SHEAR FORCE	165,700 − −161,200		ALLOWABLE BENDING MOMENT	7,950,500 − −7,140,000	
FR.70	BASE VALUE		①			①	
	DRAFT CORRECTION	CD ( ) × Δ D	②		CD ( ) × Δ D	②	
	TRIM CORRECTION	CD ( ) × TRIM	③		CD ( ) × TRIM	③	
	BUOY ANCY & L. W.	①+②+③	SS		①+②+③	SS	
	DEADWEIGHT	$\sum W_i$	$\sum W$		$\sum W_i$	$\sum W$	
	CALCULATED VALUE	(SS − ∑ W) × 9,800			(SS − ∑ W) × 9,800		
	ALLOWABLE VALUE	ALLOWABLE SHEAR FORCE	151,800 − −145,300		ALLOWABLE BENDING MOMENT	4,432,200 − −2,590,400	
FR.65	BASE VALUE		①			①	
	DRAFT CORRECTION	CD ( ) × Δ D	②		CD ( ) × Δ D	②	
	TRIM CORRECTION	CD ( ) × TRIM	③		CD ( ) × TRIM	③	
	BUOY ANCY & L. W.	①+②+③	SS		①+②+③	SS	
	DEADWEIGHT	$\sum W_i$	$\sum W$		$\sum W_i$	$\sum W$	
	CALCULATED VALUE	(SS − ∑ W) × 9,800			(SS − ∑ W) × 9,800		
	ALLOWABLE VALUE	ALLOWABLE SHEAR FORCE	118,400 − −112,800		ALLOWABLE BENDING MOMENT	2,282,900 − −1,728,000	

1.9 Method of Calculation of Vertical Shear Force in Alternate Loading

1.9.1

Where the adjoining holds are loaded alternately, the shear force is to be corrected in accordance with the calculation form shown in **Table 7**.

(1) Method of calculation (See **Fig. 9**)

(a) Vertical still water shear force Q_{SV} (column **(1)**) (*kN*)

Vertical still water shear force obtained in **1.8** is to be entered in column **(1)**.

(b) Load between transverse bulkheads ($Q_{SV_F} - Q_{SV_A}$) (column **(2)**) (*kN*)

For each hold, the vertical still water shear force Q_{SV} at the aft end bulkhead of the hold is Q_{SV_A}, and the vertical shear force (Q_{SV}) at the fore end bulkhead of the hold is Q_{SV_F}, and the difference, $Q_{SV_F} - Q_{SV_A}$, is entered in column (2).

(c) Ballast weight of topside tank (column **(3)**) (*kN*)

Where the topside tank is loaded with ballast, the weight of the load (*t*) is multiplied by 9.8 and the corresponding value (*kN*) is entered in column **(3)**.

(d) Ballast weight of topside tank between bulkheads F_T (column **(5)**) (*kN*)

This column represents, for each hold, ballast F_T of the topside tank supported by transverse bulkheads at fore and aft ends of the hold, and a value (*kN*) derived by multiplying the ballast weight of the topside tank (column **(3)**) by the load ratio *C* (proportion of topside tank included between transverse bulkheads) is entered.

(e) Load acting on double bottoms ($Q_{SV_F} - Q_{SV_A} - F_T$) (column **(6)**) (*kN*)

This column represents, for each hold, the load (*kN*) which acts on the double bottoms of the holds, and the difference between the value in column **(2)** and the value in column **(5)** is entered.

(f) Shear force modifier ΔQ_{SV_C} (column **(8)**)(*kN*)

This column represents, for each hold, the shear force modifier ΔQ_{SV_C} which modifies the shear force at fore and aft end bulkheads of the hold Q_{SV}, and the value obtained by multiplying the load in column **(6)** by a coefficient *C* determined at each hold (value established in accordance with the requirements in **5.2.2.4, Part 1 of Part C of the Rules** and entered beforehand in column **(7)**) is entered.

(g) Shear force at fore and aft of transverse bulkhead (Q_{SV_CA} and Q_{SV_CF}) (column **(9)**) (*kN*)

This column represents shear force at fore side of aft end bulkhead of hold Q_{SV_CA} or shear force at aft side of fore end bulkhead of hold Q_{SV_CF}, and is given in the following **i)** and **ii)**.

i) The shear force at the fore side of aft end bulkhead of hold is to be given as Q_{SV_CA} as defined as follows:

$$Q_{SV_CA} = Q_{SV_A} + \Delta Q_{SV_C}$$

Where:

Q_{SV_A}: Shear force at aft end bulkhead of hold under consideration, whose value is entered in column **(1)**

ΔQ_{SV_C}: Shear force modifier at the hold under consideration, whose value is recorded in column **(8)**

ii) The shear force at the aft side of fore end bulkhead of hold is to be given as Q_{SV_CF} as defined as follows:

$$Q_{SV_CF} = Q_{SV_SF} - \Delta Q_{SV_C}$$

Where:

Q_{SV_CF}: Shear force at fore end bulkhead of hold under consideration, whose value is entered in column **(1)**

ΔQ_{SV_C}: As given in **i)** above

(h) Allowable values of shear force

The allowable values of shear force are indicated in the last column, and thus the value of shear force in alternate loading condition (value in column **(9)**) is to be in the range between these two allowable values.

Fig 8 Method of Calculation of Vertical Shear Force in Alternate Loading

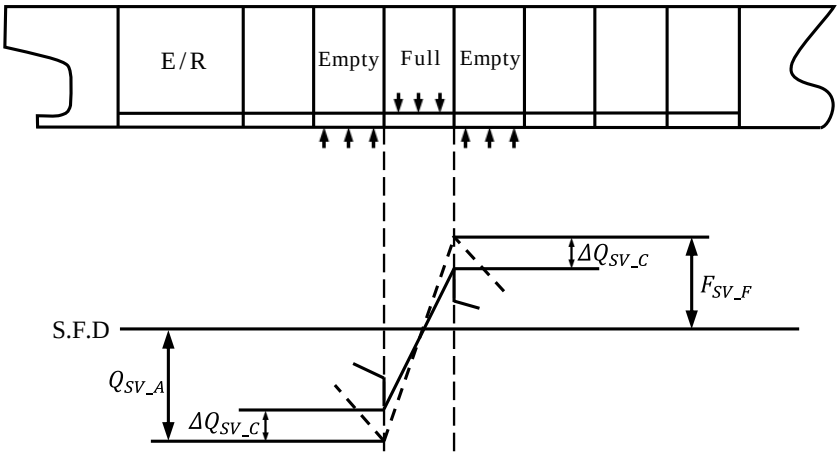

Table 7 Calculation Form for Shear Force in Alternate Loading Condition

	FR.No.	FR.37	FR.70		FR.102		FR.125		FR.158		FR.181		FR.205
①	Still Water Shear Force Q_{SV} (*kN*)												
	Cargo Hold No.	No.6 Cargo Hold		No.5 Cargo Hold		No.4 Cargo Hold		No.3 Cargo Hold		No.2 Cargo Hold		No.1 Cargo Hold	
②	$Q_{SV_F} - Q_{SV_A}$ (*kN*)												
	No. of Top Side Tank	No.4 Top Side Tank				No.3 Top Side Tank				No.2 Top Side Tank		No.1 Top Side Tank	
③	Ballast Weight of TST (*kN*)												
④	Load Ratio C	0.5		0.5		0.5		0.5		1.0		1.0	
⑤	F_T (③×④)												
⑥	Load acting on Double Bottom ($Q_{SV_F} - Q_{SV_A} - F_T$) (② − ⑤)												
⑦	Hold Coefficient C	0.305		0.264		0.264		0.250		0.264		0.302	
⑧	Shear Force Modifier ΔQ_{SV_C} (⑥×⑦)												
⑨	Shear Force at Aft and Fore Bulkhead of Hold (Q_{SV_CA} & Q_{SV_CF})	Q_{SV_CA} ①+⑧	Q_{SV_CF} ①−⑧	Q_{SV_CA} ①+⑧	Q_{SV_CF} ①−⑧	Q_{SV_CA} ①+⑧	Q_{SV_CF} ①−⑧	Q_{SV_CA} ①+⑧	Q_{SV_CF} ①−⑧	Q_{SV_CA} ①+⑧	Q_{SV_CF} ①−⑧	Q_{SV_CA} ①+⑧	Q_{SV_CF} ①−⑧
Allowable Value of Shear Force (*kN*)	+	30,200	25,500		26,300		27,600		27,600		25,200		29,300
	−	−28,100	−25,200		−25,200		−27,600		−28,700		−28,500		−30,400

Appendix C3 SAMPLE OF SHIP STRUCTURAL ACCESS MANUAL

This Appendix gives a reference sample for the preparation of a Ship Structure Access Manual as required in **14.16.3.6, Part C of the Rules**. This includes items specified in the Rules and also general notices for ensuring the maintenance of a minimum level of safety in the use of means of access, with examples. It should be noted that when preparing the manual for each ship, factors such as the specifications of means of access and the type of ship safety management system onboard that ship are taken into consideration.

Ship Structure Access Manual

Foreword

This access manual provides for safe conduct of overall and close-up inspections and thickness measurements on a regular basis throughout the ship's operational life, and gives necessary information and instructions for that purpose, under the provisions of *SOLAS* regulation II-1/3-6 adopted by resolution *MSC*.134(76) as amended by resolution *MSC*.151(78) and the Technical provisions for means of access for inspections adopted by resolution *MSC*.133(76) as amended by resolution *MSC*.158(78).

Contents

Preamble

Part I Manual for Safe Access

1 General Information
- 1.1 Ship Particulars
- 1.2 Tank Arrangement

2 Scope of Access Manual
- 2.1 General
- 2.2 Critical Structural Areas
- 2.3 Relevant Rules
- 2.4 Approval / Re-approval

3 Definitions

4 Access Plans

5 Instructions
- 5.1 Instructions for Use of Means of Access
- 5.2 Instructions for Inspection and Maintenance of Means of Access
- 5.3 Instructions for Rigging and Use of Portable Means of Access
- 5.4 Instructions for Safety Rafting
- 5.5 Instructions for Use of Portable Platforms
- 5.6 Instructions for Use of Staging
- 5.7 Instructions for Use of Wire Lift Platform
- 5.8 Instructions for Use of Hydraulic Arm Vehicles

6 Inventory of Portable Mean of Access

Appendix 1 [*Prepared for each ship appropriately, e.g.* Plans for Access to the under deck structures within No.x Cargo Tanks (P/S)]

Appendix [*Prepared for each ship appropriately*]

Appendix [*Prepared for each ship appropriately*]

Appendix [*Prepared for each ship appropriately*]

Appendix [*Prepared for each ship appropriately*]

Appendix Inventory of Portable Means of Access

Part II Records for Means of Access

7 Records of Inspections and Maintenance

8 Records of Change of Portable Means of Access

Ship Structure Access Manual

Preamble

It has long been recognised that the only way of ensuring that the condition of a ship's structure is maintained to conform to the applicable requirements is for all its components to be surveyed on a regular basis throughout their operational life. This will ensure that they are free from damage such as cracks, buckling or deformation due to corrosion, overloading, or contact damage and that thickness diminution is within established limits. The provision of suitable means of access to the hull structure for the purpose of carrying out overall and close-up surveys and inspections is essential and such means should be considered and provided for at the ship design stage.

Ships should be designed and built with due consideration as to how they will be surveyed by flag State inspectors and classification society surveyors during their in-service life and how the crew will be able to monitor the condition of the ship. Without adequate access, the structural condition of the ship can deteriorate undetected and major structural failure can arise. A comprehensive approach to design and maintenance is required to cover the whole projected life of the ship.

Part I Manual for Safe Access

1 General Information

1.1 Ship Particulars

[*Prepared for each ship appropriately*]

1.2 Tank Arrangement

[*Prepared for each ship appropriately*]

2 Scope of Access Manual

2.1 General

2.1.1 Permanent means of access provided for the ship do not give access to all areas required to be surveyed and measured. It is necessary that all areas outside of reach (*i.e.* normally beyond hand's reach) of the permanent means of access can be accessed by alternative means in combination with the permanent means of access, including those specified by resolution *A*.1049(27) (2011 *ESP* code). Critical structural areas, if necessary, also can be accessed by appropriate means of access.

2.1.2 Such means of access are described as shown in section 4. However other access arrangements including innovative means may be accepted in lieu of the arrangement described in the manual, based on a case-by-case acceptance with the Classification Society prior to the survey.

2.1.3 Where movable means of access are supplied by a shore-based provider, it should be noted that the confirmation of suitability for the purpose and its safe and adequate use should be made by the Owner based on recorded maintenance and an inspection regime by the provider of the equipment. It should be also noted that the surveyor has the right to reject movable means of access if not satisfied with the documentation or condition of the equipment.

2.1.4 Where the Ship Safety Management System specifies handling/operation of means of access, reference to these documents should be made in the access manual.

2.2 Critical Structural Areas

2.2.1 Critical structural areas are locations which have been identified from calculations to require monitoring or from the service history of similar or sister ships to be sensitive to cracking, buckling or corrosion which would impair the structural integrity of the ship, and, for this ship, are listed as follows:

[*Prepared for each ship appropriately*]

2.2.2 Where monitoring other locations are deemed as necessary from the service history of this ship, or similar or sister ships, such locations should be added to the above list.

2.3 Relevant Rules and Regulations

Reference is to be made to the following publications:

(a) *SOLAS* regulation II-1/3-6 adopted by resolution *MSC*.134(76), as amended

(b) Technical Provisions adopted by resolution *MSC*.133(76), as amended

(c) International Code on the Enhanced Programme of Inspection During Surveys of Bulk Carriers and Oil Tankers adopted by resolution *A*.1049(27) (2011 *ESP* code)

(d) *IACS* Unified Requirements Z10.1, Z10.2, Z10.4 and Z10.5, as appropriate

(e) *IACS* Unified Interpretation SC191, as amended

(f) The relevant Class Rules for Vessels of the concerned Classification Society

(g) *IACS* Recommendation No.39 "Safe Use of Rafts or Boats for Survey"

(h) *IACS* Recommendation No.78 "Safe Use of Portable Ladders for Close-Up Surveys"

(i) *IACS* Recommendation No.91 "Guidelines for Approval/Acceptance of Alternative Means of Access"

2.4 Approval / Re-approval

2.4.1 Any changes of the permanent, portable, movable or alternative means of access within the scope of this manual are subject to review and approval / re-approval by the Administration or by the organisation recognised by the Administration. An updated copy of the approved manual is to be kept on board. For the approval / re-approval, it should be demonstrated that such means of access provides the required access.

2.4.2 Notwithstanding the provisions of **2.4.1**, replacing portable means of access with similar portable means which would give equivalent safety and accessibility, might not require the approval / re-approval, subject to being recorded in the access manual and reviewed by the Administration or by the organisation recognised by the Administration at a periodical survey after such a change.

3 Definitions

3.1 *Portable means of access* are means that generally may be hand carried by the crew *e.g.* ladders, small platforms and staging. Portable means specified as part of the Ship Structure Access Manual should be carried onboard the ship throughout the duration of the validity of the relevant access manual.

3.2 *Movable means of access* may include devices like cherry pickers, wire lift platforms, rafts or other means. Unless otherwise specified in the Technical Provisions (TP) or UI SC191, as amended, such means need not necessarily be kept on board or be capable of being operated by the ship's crew. However arrangements for the provision of such means should be addressed during survey planning. Movable means of access should be included in the Ship Structure Access Manual to designate the extent of access to the structural members to be surveyed and measured.

3.3 *Alternative means of access* is a term within *SOLAS* II-1/3-6 and TP for portable or movable means of access provided for the survey and thickness measurements of hull structure in areas otherwise not accessible by permanent means of access. For the purpose of this manual, alternative means of access include supplementary or additional means to provide necessary access for surveys and thickness measurements in accordance with *SOLAS* II-1/3-6.

3.4 *Approved* means that the construction and materials of the means of access and any attachment to the ship's structure should be to the satisfaction of the Administration. Compliance with the procedures in *IACS* Recommendation No.91 should be used in the absence of any specific instructions from a specific administration

3.5 *Acceptance:* it should be demonstrated to the satisfaction of the Owner that the equipment provided has been maintained and is, where applicable, provided with operators who are trained to use such equipment. This should be demonstrated to the surveyors by the production of documents, prior to the equipment being used, which demonstrate that the equipment has been maintained and which indicate any limitations of the equipment.

3.6 *Authorised person* is a person specified by the Company who uses the means of access and that should assume the role of inspector for checking the access arrangements for obvious damage prior to use. Whilst using the means of access, the inspector should verify the condition of the sections used by close up examination of those sections and note any deterioration in the provisions. Should any damage or deterioration be found, the effect of such deterioration should be assessed as to whether the damage or deterioration affects the safety for continued use of the means of access. Deterioration found that is considered to affect safe use should be determined and measures should be put in place to ensure that the affected section(*s*) should not be further used prior to effective repair.

3.7 *Rung* means the step of a vertical ladder or step on the vertical surface.

3.8 *Tread* means the step of an inclined ladder or step for the vertical access opening.

3.9 *Spaces* are separate compartments including holds and tanks.

3.10 *Ballast tank* is a tank which is used for water ballast and includes side ballast tanks, ballast double bottom spaces, topside tanks, hopper side tanks and peak tanks.

3.11 An *overall survey* is a survey intended to report on the overall condition of the hull structure and determine the extent of close-up surveys.

3.12 A *close-up survey* is a survey where the details of structural components are within the close visual inspection range of the surveyor, *i.e.*, normally within reach of hand.

3.13 *Transverse section* includes all longitudinal members such as plating, longitudinals and girders at the deck, side and bottom, inner bottom and hopper side plating, longitudinal bulkheads, and bottom plating in top wing tanks.

3.14 *Representative spaces* are those, which are expected to reflect the condition of other spaces of similar type and service and with similar corrosion prevention systems. When selecting representative spaces account should be taken of the service and repair history on board and identifiable critical and/or suspect areas.

3.15 *Suspect areas* are locations showing substantial corrosion and/or are considered by the surveyor to be prone to rapid wastage.

3.16 *Substantial corrosion* is an extent of corrosion such that assessment of corrosion pattern indicates wastage in excess of 75% of allowable margins, but within acceptable limits.

3.17 A *corrosion prevention system* is normally considered a full hard coating.

Hard protective coating should be epoxy coating or equivalent. Other coating systems may be considered acceptable as alternatives provided that they are applied and maintained in compliance with the manufacturer's specifications.

3.18 *Coating condition* is defined as follows:

GOOD condition with only minor spot rusting;

FAIR condition with local breakdown of coating at edges of stiffeners and weld connections and/or light rusting over 20% or more of areas under consideration, but less than as defined for *POOR* condition;

POOR condition with general breakdown of coating over 20% or more of areas or hard scale at 10% or more of areas under consideration.

3.19 *Critical structural areas* are locations, which have been identified from calculations to require monitoring or from the service history of the subject ship or from similar or sister ships to be sensitive to cracking, buckling or corrosion, which would impair the structural integrity of the ship.

4 Access Plans

[*Prepared appropriately*]

4.1 Plans showing the means of access to spaces (including openings for introducing portable means), with appropriate technical specifications and dimensions as shown in appendixes X.

4.2 Plans showing the means of access within each space to enable an overall inspection to be carried out, with appropriate technical specifications and dimensions as shown in appendixes X.

4.3 Plans showing the means of access within the space to enable close-up inspections to be carried out and necessary alternative means to be deployed. For any alternative means carried on board, appropriate technical specifications and dimensions are as shown in appendixes X.

5 Instructions

5.1 Instructions for Use of Means of Access

5.1.1 All persons using the means of access arrangements should study the instructions for safety in the access manual so as to gain adequate knowledge of the arrangements for the space(*s*) to be inspected prior to their use. Appropriate personal protective equipment must be available, if required.

5.1.2 Any recorded deficiencies to the means of access for the space(*s*) to be inspected should be considered. Any section with significant damage is not to be used.

5.1.3 It is recognised that climbing may be used by surveyors during surveys but is not accepted as an alternative means of access. When climbing the structures within tanks is necessary during surveys, the surface of the structures should be free of oil, sludge and mud and relatively dry to the satisfaction of the surveyor so that a good firm, non-slip footing maybe obtained.

5.2 Instructions for Inspection and Maintenance of Means of Access

5.2.1 Verification of means of access including portable equipment and their attachments is part of periodical surveys for continued effectiveness of the means of access in that space which is subject to the survey. After a space has been ventilated, cleaned and illuminated for the survey, an inspection of means of access should be carried out by the crew and/or an authorised person.

5.2.2 Periodical inspections of means of access should be carried out by the crew and/or an authorised person as a part of regular

inspection and maintenance, at intervals, which are determined taking into account any corrosive atmosphere that may be within the space.

5.2.3 Any authorised person using the means of access should assume the role of inspector and check for obvious damage prior to using the access arrangements. Whilst using the means of access, the inspector should verify the condition of the sections used by close up examination of those sections and note any deterioration in the provisions. Should any damage or deterioration be found, the effect of such deterioration should be assessed as to whether the damage or deterioration affects the safety for continued use of the access. Deterioration found that is considered to affect safe use should be determined as "substantial damage" and measures should be put in place to ensure that the affected section(*s*) are not to be further used prior to completing effective repair.

5.2.4 Periodical surveys of any space that contains means of access should include verification of the continued effectiveness of the means of access in that space. Usually, survey of the means of access is not expected to exceed the scope and extent of the survey being undertaken. If the means of access is found deficient the scope of survey should be extended if this is considered appropriate.

5.2.5 Records of all inspections should be established based on the requirements detailed in the ships Safety Management System. The records should be readily available to persons using the means of access and a copy attached to the access manual. The latest record for the portion of the means of access inspected should include as a minimum the date of the inspection, the name and title of the inspector, a confirmation signature, the sections of means of access inspected, verification of continued serviceable condition or details of any deterioration or substantial damage found. A file of permits issued should be maintained for verification.

5.2.6 Where movable means of access are supplied by a shore-based provider, the confirmation of its safe and adequate use should be made based on recorded maintenance and inspection regime by the provider of the equipment. Cognizance should be taken of the complexity of the equipment when making the judgment on the periodicity of inspections and thoroughness of maintenance by the provider of equipment.

5.2.7 The maintenance of all means of access should be in accordance with the Ships Safety Management System.

5.3 Instructions for the Rigging and Use of Portable Means of Access

5.3.1 Portable ladders should rest on a stable, strong, suitably sized, immobile footing so that the rungs remain horizontal. Suspended ladders should be attached in a manner so that they cannot be displaced and do not swing. Step ladders, hanging ladders and ladders more than 5 *m* long may only be utilised if fitted with a mechanical device to secure the upper end of the ladder. Portable ladders should be maintained free of oil, grease and other slipping hazards.

5.3.2 The feet of portable ladders should be prevented from slipping during use by securing the stiles at or near their upper and lower ends, by any anti-slip device or by other arrangements of equivalent effectiveness. Unless otherwise stated in its specification or unless provided with appropriate securing means, the ladder should be raised at an angle of approximately 70 *degrees*.

5.3.3 When portable ladders are used on top of the inner bottom or on deep stringers, the falling height should generally not exceed 6 *m*. Suitable attachment points for securing safety harnesses should be provided. If it is necessary to exceed this height:

- There should be at least 3 *m* of water above the highest structural element in the bottom to provide a "cushion"
- A suitable safety harnesses or safety rafting should be considered
- Personal floating devices (*PFD*) should be used

The free falling height above the water surface should not exceed 6 *m*.

5.3.4 Portable ladders should be arranged and rigged to support at least four *times* the maximum intended load.

5.3.5 When climbing ladders in tanks containing water, personnel should wear flotation aids. A floatation aid is a simple form of lifejacket, which does not impede climbing, or a self-inflatable lifejacket.

5.3.6 Aluminium ladders may be used in cargo tanks, but should not be stored in the cargo area or other gas dangerous spaces.

5.3.7 The securing of the equipment, its operation and training in its use should be in accordance with the Ships Safety Management System.

5.4 Instructions for Safety Rafting (If Applicable)

5.4.1 Surveys of tanks or spaces by means of rafts or boats may only be undertaken with the agreement of the attending surveyor(*s*), who is to take into account the safety arrangements provided, including weather forecasting and ship response in reasonable sea conditions. Appropriate safety measures, including the following, should be taken by the authorised person prior to survey to the satisfaction of the attending surveyor(*s*).

5.4.2 When rafts or boats will be used for close-up survey the following conditions should be observed:

(1) Only rough duty, inflatable rafts or boats, having satisfactory residual buoyancy and stability even if one chamber is ruptured,

should be used.

(2) The boat or raft should be tethered to the access ladder and an additional person should be stationed down the access ladder with a clear view of the boat or raft.

(3) Appropriate lifejackets should be available for all participants.

(4) The surface of the water in the tank should be calm (under all foreseeable conditions the expected rise of water within the tank should not exceed 0.25*m*) and the water level stationary. On no account should the level of the water be rising while the boat or raft is in use.

(5) The tank or space must contain clean ballast water only. When a thin sheen of oil on the water is observed, further testing of the atmosphere should be done to ensure that the tank or space is safe for entering.

(6) For rafting of cargo tanks, at no time should the upside of the boat or raft be allowed to be within 1 *m* of the deepest under deck web face flat so that the survey team is not isolated from a direct escape route to the tank hatch. Filling to levels above the deck transverses should only be contemplated if a permanent means of access, as per paragraph **5.4.3(2)**, below, is provided. For bulk cargo holds designed to be filled with water (*e.g.* ballast holds) and where the water is permitted to be filled up to a height not less than 2 *m* below the top of side frames (*e.g.* air draft holds), rafting may be utilised in lieu of permanent means of access to side frames (ref. TP Table 2 - 1.8) provided the structural capacity of the hold is sufficient to withstand static loads at all levels of water needed to survey the side shell frames

(7) If the tanks (or spaces) are connected by a common venting system, or inert gas system, the tank in which the boat or raft is to be used should be isolated to prevent a transfer of gas from other tanks (or spaces).

5.4.3 In addition to the above, rafts or boats alone may be allowed for close-up survey of the under deck areas for tanks or spaces if the depth of the webs are 1.5 *m* or less. If the depth of the webs is more than 1.5 *m*, rafts or boats alone may be allowed only under either of the following conditions:

(1) When the coating of the under deck structure, as evaluated from a safe distance (*See* **5.4.2(6)**, is in *GOOD* condition and there is no evidence of wastage

(2) If a permanent means of access is provided in each bay to allow safe entry and exit. This means either of the following:

(a) Access direct from the deck via a vertical ladder and a small platform about 2 *m* below the deck

(b) Access to the deck from a longitudinal permanent platform having ladders to the deck in each end of the tank
The platform should, for the full length of the tank, be arranged in level with, or above, the maximum water level needed for rafting of under deck structures. For this purpose, the ullage corresponding to the maximum water level should be assumed to be not more than 3 *m* from the deck plate measured at the midspan of deck transverses and in the middle of the length of the tank.

5.4.4 Safety Meetings should be held prior to entering the tank or space and regularly during the survey on board for ensuring the following:

(1) The establishment of proper preparation and the close co-operation between the attending surveyor(*s*) and the company's representatives onboard prior to and during the survey are an essential part in the safe and efficient conduct of the survey.

(2) Applicable safety procedures and responsibilities should be discussed and agreed to ensure that the survey is carried out under controlled conditions.

5.4.5 Adequate communication arrangements and equipment should be prepared for ensuring the following:

(1) The attending surveyor(*s*) is always accompanied by at least one responsible person assigned by the company experienced in tank and enclosed spaces inspection. In addition a backup team of at least two experienced persons should be stationed at the hatch opening of the tank or space that is being surveyed. The back-up team should continuously observe the work in the tank or space and should keep lifesaving and evacuation equipment ready for use.

(2) A communication system should be arranged between the survey party in the tank or space being examined and the responsible officer on deck, the navigation bridge and the personnel in charge of handling the ballast pump(s) in the pump control room. These communication arrangements should be maintained throughout the survey.

(3) Adequate and safe lighting should be provided for the safe and efficient conduct of the survey.

(4) Adequate protective clothing should be made available and used (*e.g.* safety helmet, gloves, safety shoes, etc) during the survey.

5.4.6 The organisation for the surveys by means of rafting, its operation and training in its use should be in accordance with the Ships Safety Management System.

5.5 Instructions for Use of Portable Platforms (If Applicable)

5.5.1 Portable platforms should not be more than 3 *m* in length.

5.5.2 Safety measures, including ensuring that portable platforms are safely secured and supported prior to use, should be taken by the authorised person prior to survey to the satisfaction of the attending surveyor(*s*).

5.5.3 The rigging of the equipment, its operation and training in its use should be in accordance with the Ships Safety Management System.

5.6 Instructions for Use of Staging (If Applicable)

5.6.1 Appropriate safety measures should be taken by the authorised person prior to survey to the satisfaction of the attending surveyor(*s*).

5.6.2 Before working on or near any staging it should be ensured that:

(1) A minimum of 6 evenly spaced suspension points – steel wire ropes or chains evenly spaced and as near vertical as possible are provided.

(2) Scaffold tubes are linked by rigid-angle couplers.

(3) An adequate working platform, fully boarded with toe boards and guardrails is provided. Platform transforms (at 1.2*m* intervals) resting on ledgers (at 2.5 *m* interval) and double transforms at platform board overlaps.

(4) The staging is level and provided with safe access (such as ladders).

(5) The staging is adequately decked (for example have a work surface and platform), and provided with guardrails.

(6) The staging is adequate for the work performed taking into account that falls are a significant hazard in site.

5.6.3 Where specifically designed staging is carried on board as a part of the means of access listed in the Ship Structure Access Manual, the rigging of the equipment, its operation and training in its use should be in accordance with the Ships Safety Management System.

5.7 Instructions for Use of Wire Lift Platforms (If Applicable)

5.7.1 Safety measures, including the following, should be taken by an authorised person prior to survey to the satisfaction of the attending surveyor(*s*):

(1) Rigging of wires should be in accordance with manufacturer's recommendations and conducted by suitably qualified riggers.

(2) Fix points to which the wires will be connected should be examined before each use and verified as in good condition (free of wastage, fractures, etc.).

(3) Means should be provided for using fall protection with a lifeline that can be tended from above the platform.

5.7.2 The rigging of the equipment, its operation and training in its use should be in accordance with the Ships Safety Management System.

5.8 Instructions for Use of Hydraulic Arm Vehicles (If Applicable)

5.8.1 The vehicle should be operated by qualified personnel and evidence should be provided that the vehicle has been properly maintained by a shore-based provider. The standing platform should be fitted with anchor points for attaching fall arrest systems. For those vehicles provided with a self-levelling platform, care should be taken that the locking device is engaged after completion of manoeuvring to ensure that the platform is fixed.

5.8.2 Safety measures, including the following, should be taken by an authorised person prior to survey to the satisfaction of the attending surveyor(*s*):

(1) Lift controls, including safety devices should be serviceable and should be operated throughout the range prior to use.

(2) Operators should be trained.

(3) The operating range of the equipment should be agreed with the operator before using the equipment.

(4) Operators should work within the basket.

(5) Body belts (such as harnesses) with lanyards should be used.

(6) Permissible load and reach limitations should not be exceeded.

(7) Brakes should be set; outriggers used, if so equipped; and wheels chocked; if on incline.

(8) Unless designed otherwise, aerial lift trucks should not be moved when the boom is elevated in a working position with workers in the basket.

(9) Upper and lower controls should be required and should be plainly marked. Lower controls should be capable of overriding the upper controls.

(10) Special precautions should be made to ensure the vessel and the lifting device are stable when aerial lifts are used aboard vessels (for example barges, floats).

(11) Personal flotation devices (*PFD*) should be used when working over water.

(12) Caution should be taken for potential crushing hazards (for example booming into the overhead, pinch point).

5.8.3 The operation and training in the use of this type of equipment should be in accordance with the Ships Safety Management System.

6 Inventory of Portable Means of Access

All portable means of access are listed as shown in appendix xx.

Appendix 1

Plans for Access to the Under Deck Structures within No.x Cargo Tanks (P/S) (*example*)

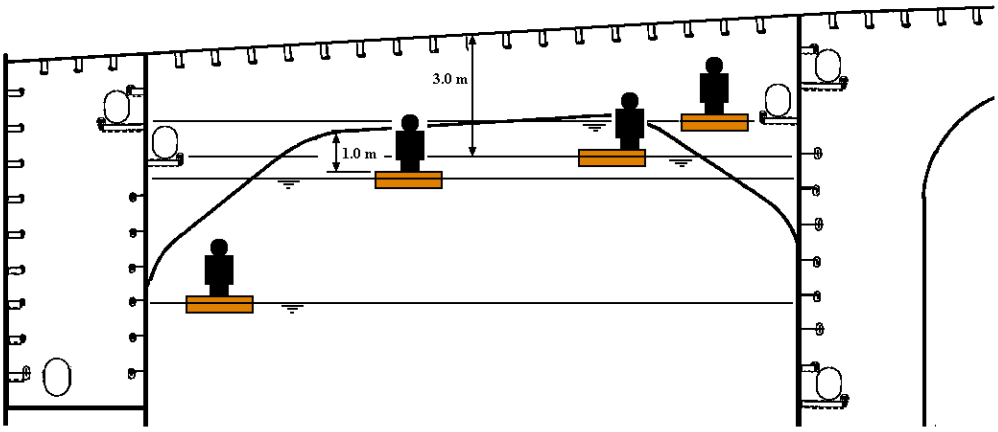

Appendix

Top Side Tank, Bilge Hopper Tank and Cargo Hold (Hold Frames) (*example*)

Notes:

1. Before use, the top of the ladder located in the top wing tank should be secured to ensure sufficient support of the ladder towards the deck longitudinals.
2. Where ladders are used at relatively small angles (*e.g.*, less than 45 *degrees*) such as those prepared for the use on the hopper tank sloping plate (see the folding type ladder in the following figure), the steps of such ladders are assumed to be designed in such a way that a safe walkway is provided. For such ladders of more than 5 *m* in length, handrails should be provided.

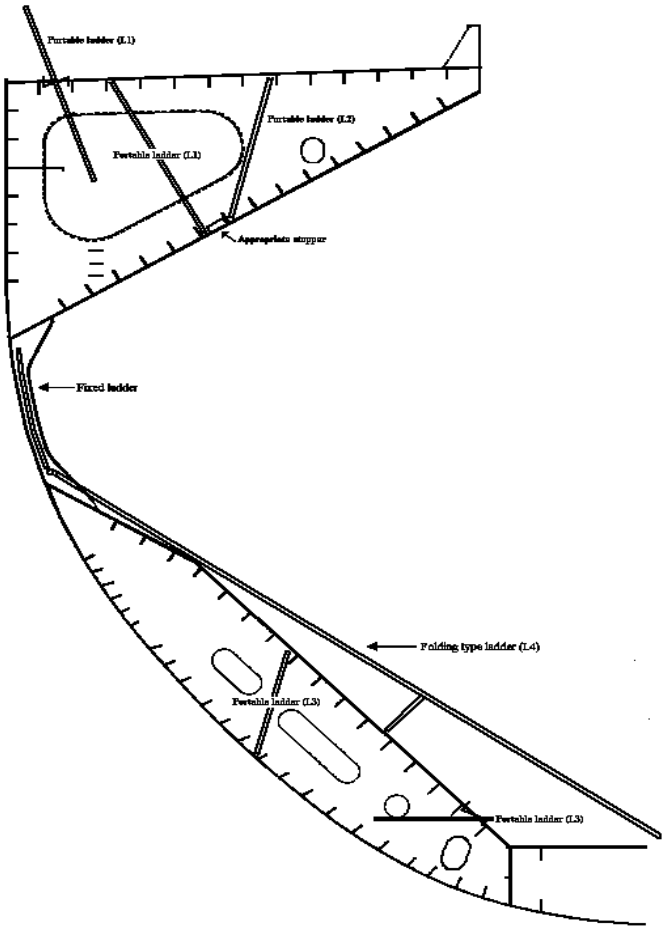

Appendix

Inventory of Portable Means of Access

[*Prepared appropriately*]

ID	Type	Dimensions	Applicable spaces	Number/Storage	Note
L1	Portable ladder	5 *m*	All spaces	2 sets / No.1 Deck Store	See the attached maker's specification.
L2	Portable ladder	4 *m*	All spaces	1 set / No.1 Deck Store	SG mark by Consumer Product Safety Association, Japan See the attached maker's specification.
L3	Portable ladder	3 *m*	All spaces	1 set / No.1 Deck Store 1 set / Boatswain Store	SG mark by Consumer Product Safety Association, Japan See the attached maker's specification.
L4	Folding type ladder	18 *m*	Cargo holds	3 sets / No.2 Deck Store	See the attached maker's specification.

Part II Records for Means of Access

(*This part is approved for its form only at new building.*)

7 Records of Inspections and Maintenance

[***Prepared appropriately***]

Note: The record for the portion of the means of access inspected should include, as a minimum, the date of the inspection, the name and title of the inspector, a confirmation signature, the sections of the means of access inspected, verification of continued serviceable condition or details of any deterioration or substantial damage found.

8 Records of Change of Portable Means of Access

[***Prepared appropriately***]

Appendix C4 GUIDELINES FOR OWNERS/OPERATORS ON PREPARING EMERGENCY TOWING PROCEDURES (MSC.1/Circ.1255 ANNEX)

1 PURPOSE

The purpose of these Guidelines is to assist owners/operators in preparing ship-specific emergency towing procedures for ships subject to *SOLAS* regulation II-1/3-4. The procedures should be considered as part of the emergency preparedness required by paragraph 8 of part A of the International Safety Management (ISM) Code.

2 OBSERVATIONS

2.1 Owners, operators and crews should take into consideration that the nature of an emergency does not allow time for deliberation. Accordingly, the procedures should be practiced beforehand.

2.2 The towing procedures should be maintained on board the ship for ready use by the ship's crew in preparing their ship for towage in an emergency.

2.3 The crew should have good knowledge of equipment stowage location and accessibility. Any identified improvements to stowage arrangements should be implemented.

2.4 Crew dealing with an emergency situation should be aware of power availability required for winches and tools, as well as for deck lighting (for bad/low visibility and night time situations).

2.5 It is recognized that not all ships will have the same degree of shipboard equipment, so that there may be limits to possible towing procedures. Nevertheless, the intention is to predetermine what can be accomplished, and provide this information to the ship's crew in a ready-to-use format (booklet, plans, poster, etc.).

3 SHIP EVALUATION

3.1 The owner/operator should ensure that the ship is inspected and its capability to be towed under emergency situations is evaluated. Both equipment on board and available procedures should be reviewed. Items that need to be inspected are described in the following paragraphs.

3.2 The ability of the ship to be towed from bow and stern should be evaluated, and the following items should be reviewed:

.1 line handling procedures (passing and receiving messenger lines, towlines, bridles); and

.2 layout, structural adequacy and safe working loads of connection points (fairleads chocks, winches, bitts, bollards), etc.

3.3 The on-board tools and equipment available for assembling the towing gear and their locations should be identified. These should include but not be limited to:

.1 chains;

.2 cables;

.3 shackles;

.4 stoppers;

.5 tools; and

.6 line throwing apparatus.

3.4 The availability and characteristics of radio equipment on board should be identified, in order to enable communication between deck crew, bridge and the towing/salvage ship.

3.5 Unless the safe working loads of connection points are known, these loads should be determined by an engineering analysis reflecting the on-board conditions of the ship. The Guidance on shipboard towing and mooring equipment (*MSC*/Circ.1175) may be used for guidance.

3.6 The evaluation should be performed by persons knowledgeable in towing equipment and operations.

4 EMERGENCY TOWING BOOKLET

4.1 The Emergency Towing Booklet (ETB) should be ship specific and be presented in a clear, concise and ready-to-use format (booklet, plan, poster, etc.).

4.2 Ship-specific data should include but not be limited to:

.1 ship's name;

.2 call sign;

.3 IMO number;

.4 anchor details (shackle, connection details, weight, type, etc.);

.5 cable and chain details (lengths, connection details, proof load, etc.);

.6 height of mooring deck(s) above base;

.7 draft range; and

.8 displacement range.

4.3 All procedures developed in accordance with **section 5** should be presented in a clear and easy to understand format, which will aid their smooth and swift application in an emergency situation.

4.4 Comprehensive diagrams and sketches should be available and include the following:

.1 assembly and rigging diagrams;

.2 towing equipment and strong point locations; and

.3 equipment and strong point capacities and safe working loads (SWLs).

4.5 A copy should be kept at hand by the owners/operators in order to facilitate the passing on of information to the towage company as early as possible in the emergency. A copy should also be kept in a common electronic file format, which will allow faster distribution to the concerned parties.

4.6 A minimum of three copies should be kept on board and located in:

.1 the bridge;

.2 a forecastle space; and

.3 the ship's office or cargo control room.

5 DEVELOPING PROCEDURES

5.1 Ship-specific procedures should be identified during the ship's evaluation and entered accordingly in the ETB. The procedures should include, as a minimum, the following:

.1 a quick-reference decision matrix that summarizes options under various emergency scenarios, such as weather conditions (mild, severe), availability of shipboard power (propulsion, on-deck power), imminent danger of grounding, etc.;

.2 organization of deck crew (personnel distribution, equipment distribution, including radios, safety equipment, etc.);

.3 organization of tasks (what needs to be done, how it should be done, what is needed for each task, etc.);

.4 diagrams for assembling and rigging bridles, tow lines, etc., showing possible emergency towing arrangements for both fore and aft. Rigged lines should be lead such that they avoid sharp corners, edges and other points of stress concentration;

.5 power shortages and dead ship situations, which must be taken into account, especially for the heaving across of heavy towing lines;

.6 a communications plan for contacting the salvage/towing ship . This plan should list all information that the ship's master needs to communicate to the salvage/towing ship. This list should include but not be limited to:

.1 damage or seaworthiness;

.2 status of ship steering;

.3 propulsion;

.4 on deck power systems;

.5 on-board towing equipment;

.6 existing emergency rapid disconnection system;

.7 forward and aft towing point locations;

.8 equipment, connection points, strong points and safe working loads (SWL);

.9 towing equipment dimensions and capacities; and

.10 ship particulars;

.7 evaluation of existing equipment, tools and arrangements on board the ship for possible use in rigging a towing bridle and securing a towline;

.8 identification of any minor tools or equipment providing significant improvements to the "towability" of the ship;

.9 inventory and location of equipment on board that can be used during an emergency towing situation;

.10 other preparations (locking rudder and propeller shaft, ballast and trim, etc.); and

.11 other relevant information (limiting sea states, towing speeds, etc.).

Appendix C5 PERFORMANCE STANDARD FOR PROTECTIVE COATINGS FOR DEDICATED SEAWATER BALLAST TANKS IN ALL TYPES OF SHIPS AND DOUBLE-SIDE SKIN SPACES OF BULK CARRIERS (Resolution MSC.215(82) and IACS Unified Interpretations SC223)

1 PURPOSE

This Standard provides technical requirements for protective coatings in dedicated seawater ballast tanks of all type of ships of not less than 500 gross tonnage and double-side skin spaces arranged in bulk carriers of 150 *m* in length and upward[1] for which the building contract is placed, the keels of which are laid or which are delivered on or after the dates referred to in *SOLAS* regulation II-1/3-2 as adopted by resolution *MSC*.216(82).

1 This Standard applies only to dedicated seawater ballast tanks in all types of ships and double-side skin spaces in bulk carriers which are constructed of steel.

2 DEFINITIONS

For the purpose of this Standard, the following definitions apply:

2.1 *Ballast tanks* are those as defined in the Guidelines for the selection, application and maintenance of corrosion prevention systems of dedicated seawater ballast tanks (resolution *A*.798(19)) and the International Code on the enhanced programme of inspections during surveys of bulk carriers and oil tankers (resolution *A*.1049(27) (2011 *ESP* code)).

2.2 *Dew point* is the temperature at which air is saturated with moisture.

2.3 *DFT* is dry film thickness.

2.4 *Dust* is loose particle matter present on a surface prepared for painting, arising from blast-cleaning or other surface preparation processes, or resulting from the action of the environment.

2.5 *Edge grinding* is the treatment of edge before secondary surface preparation.

2.6 "*GOOD*" *condition* is the condition with minor spot rusting as defined in resolution *A*.1049(27) (2011 *ESP* code).

2.7 *Hard coating* is a coating that chemically converts during its curing process or a non-convertible air drying coating which may be used for maintenance purposes. It can be either inorganic or organic.

2.8 *NDFT* is the nominal dry film thickness. A 90/10 practice means that 90% of all thickness measurements shall be greater than, or equal to, NDFT and none of the remaining 10% measurements shall be below 0.9×NDFT.

2.9 *Primer coat* is the first coat of the coating system applied in the shipyard after shop primer application.

2.10 *Shop-primer* is the prefabrication primer coating applied to steel plates, often in automatic plants (and before the first coat of a coating system).

2.11 *Stripe coating* is painting of edges, welds, hard to reach areas, etc., to ensure good paint adhesion and proper paint thickness in critical areas.

2.12 *Target useful life* is the target value, in years, of the durability for which the coating system is designed.

2.13 *Technical Data Sheet* is paint manufacturers' Product Data Sheet which contains detailed technical instruction and information relevant to the coating and its application.

****

Interpretation

GOOD: Condition with spot rusting on less than 3% of the area under consideration without visible failure of the coating. Rusting at edges or welds, must be on less than 20 % of edges or weld lines in the area under consideration.

Coating Technical File: A term used for the collection of documents describing issues related to the coating system and its application from the point in time when the first document is provided and for the entire life of the ship including the inspection agreement and all elements of PSPC 3.4.

****

3 GENERAL PRINCIPLES

3.1 The ability of the coating system to reach its target useful life depends on the type of coating system, steel preparation, application and coating inspection and maintenance. All these aspects contribute to the good performance of the coating system.

3.2 Inspection of surface preparation and coating processes shall be agreed upon between the shipowner, the shipyard and the coating manufacturer and presented to the Administration[2] for review. The Administration may, if it so requires, participate in the agreement process. Clear evidence of these inspections shall be reported and be included in the Coating Technical File (CTF) (*See* **3.4**).

[2] In accordance with *SOLAS* regulation I/6, for the purposes of this Standard, the Administration may entrust a recognised organisation acting on its behalf to determine compliance with the prevision of this Standard.

****

Interpretation

1. Inspection of surface preparation and coating processes agreement shall be signed by shipyard, shipowner and coating manufacturer and shall be presented by the shipyard to the Administration for review prior to commencement of any coating work on any stage of a new building and as a minimum shall comply with the PSPC.
2. To facilitate the review, the following from the CTF, shall be available:
   a) Coating specification including selection of areas (spaces) to be coated, selection of coating system, surface preparation and coating process.
   b) Statement of Compliance or Type Approval of the coating system.
3. The agreement shall be included in the CTF and shall at least cover:
   a) Inspection process, including scope of inspection, who carries out the inspection, the qualifications of the coating inspector(*s*) and appointment of a qualified coating inspector (responsible for verifying that the coating is applied in accordance with the PSPC). Where more than one coating inspector will be used then their areas of responsibility shall be identified. (For example, multiple construction sites).
   b) Language to be used for documentation.
4. Any deviations in the procedure relative to the PSPC noted during the review shall be raised with the shipyard, which is responsible for identifying and implementing the corrective actions.
5. A Passenger Ship Safety Certificate or Cargo Ship Safety Certificate or Cargo Ship Safety Construction Certificate, as appropriate, shall not be issued until all required corrective actions have been closed to the satisfaction of the Administration.

****

3.3 When considering the Standard provided in **section 4**, the following is to be taken into account:

.1 it is essential that specifications, procedures and the various different steps in the coating application process (including, but not limited to, surface preparation) are strictly applied by the shipbuilder in order to prevent premature decay and/or deterioration of the coating system;

.2 the coating performance can be improved by adopting measures at the ship design stage such as reducing scallops, using rolled profiles, avoiding complex geometric configurations and ensuring that the structural configuration permits easy access for tools and to facilitate cleaning, drainage and drying of the space to be coated; and

.3 the coating performance standard provided in this document is based on experience from manufacturers, shipyards and ship operators; it is not intended to exclude suitable alternative coating systems, providing a performance at least equivalent to that specified in this Standard is demonstrated. Acceptance criteria for alternative systems are provided in **section 8**.

3.4 Coating Technical File

3.4.1 Specification of the coating system applied to the dedicated seawater ballast tanks and double-side skin spaces, record of the shipyard's and shipowner's coating work, detailed criteria for coating selection, job specifications, inspection, maintenance and repair[3] shall be documented in the Coating Technical File (CTF), and the Coating Technical File shall be reviewed by the Administration.

[3] Refer to the "*Guidelines for maintenance and repair of protective coatings*" (*MSC*.1/*Circ*.1330).

3.4.2 New construction stage

The Coating Technical File shall contain at least the following items relating to this Standard and shall be delivered by the shipyard at new ship construction stage:

.1 copy of Statement of Compliance or Type Approval Certificate;

.2 copy of Technical Data Sheet, including:

.2.1 product name and identification mark and/or number;

.2.2 materials, components and composition of the coating system, colours;

.2.3 minimum and maximum dry film thickness;

.2.4 application methods, tools and/or machines;

.2.5 condition of surface to be coated (de-rusting grade, cleanness, profile, etc.); and

.2.6 environmental limitations (temperature and humidity);

.3 shipyard work records of coating application, including:

.3.1 applied actual space and area (m^2) of each compartment;

.3.2 applied coating system;

.3.3 time of coating, thickness, number of layers, etc.;

.3.4 ambient condition during coating; and

.3.5 method of surface preparation;

.4 procedures for inspection and repair of coating system during ship construction;

.5 coating log issued by the coating inspector, stating that the coating was applied in accordance with the specifications to the satisfaction of the coating supplier representative and specifying deviations from the specifications (example of daily log and non-conformity report (*See* **annex 2**));

.6 shipyard's verified inspection report, including:

.6.1 completion date of inspection;

.6.2 result of inspection;

.6.3 remarks (if given); and

.6.4 inspector signature; and

.7 procedures for in-service maintenance and repair of coating system[3A].

[3A] Refer to the "*Guidelines for maintenance and repair of protective coatings*" (*MSC*.1/*Circ*.1330).

3.4.3 In-service maintenance, repair and partial re-coating

In-service maintenance, repair and partial re-coating activities shall be recorded in the Coating Technical File in accordance with the relevant section of the Guidelines for coating maintenance and repair[4].

[4] Refer to the "*Guidelines for maintenance and repair of protective coatings*" (*MSC*.1/*Circ*.1330).

3.4.4 Re-coating

If full re-coating is carried out, the items specified in **3.4.2** shall be recorded in the Coating Technical File.

3.4.5 The Coating Technical File shall be kept on board and maintained throughout the life of the ship.

****

Interpretation

Procedure for Coating Technical File Review

1. The shipyard is responsible for compiling the Coating Technical File (CTF) either in paper or electronic format, or a combination of the two.
2. The CTF is to contain all the information required by the PSPC 3.4 and the inspection of surface preparation and the coating processes agreement (*See* PSPC 3.2).
3. The CTF shall be reviewed for content in accordance with the PSPC 3.4.2.
4. Any deviations found under 3 shall be raised with the shipyard, which is responsible for identifying and implementing the corrective actions.
5. A Passenger Ship Safety Certificate or Cargo Ship Safety Certificate or Cargo Ship Safety Construction Certificate, as appropriate, shall not be issued until all required corrective actions have been closed to the satisfaction of the

Administration.

****

3.5 Health and safety

The shipyard is responsible for implementation of national regulations to ensure the health and safety of individuals and to minimise the risk of fire and explosion.

****

Interpretation

In order to document compliance with PSPC 3.5, relevant documentation from the coating manufacturer concerning health and safety aspects such as Material Safety Data Sheet is recommended to be included in the CTF for information.

****

4 COATING STANDARD

4.1 Performance standard

This Standard is based on specifications and requirements which intend to provide a target useful coating life of 15 years, which is considered to be the time period, from initial application, over which the coating system is intended to remain in "GOOD" condition. The actual useful life will vary, depending on numerous variables including actual conditions encountered in service.

4.2 Standard application

Protective coatings for dedicated seawater ballast tanks of all ship types and double-side skin spaces arranged in bulk carriers of 150 *m* in length and upward shall at least comply with the requirements in this Standard.

4.3 Special application

4.3.1 This Standard covers protective coating requirements for the ship's steel structure. It is noted that other independent items are fitted within the tanks to which coatings are applied to provide protection against corrosion.

4.3.2 It is recommended that this Standard is applied, to the extent possible, to those portions of permanent means of access provided for inspection not integral to the ship structure, such as rails, independent platforms, ladders, etc. Other equivalent methods of providing corrosion protection for the non-integral items may also be used, provided they do not impair the performance of the coatings of the surrounding structure. Access arrangements that are integral to the ship structure, such as increased stiffener depths for walkways, stringers, etc., are to fully comply with this Standard.

4.3.3 It is also recommended that supports for piping, measuring devices, etc., be coated in accordance with the non-integral items indicated in **4.3.2**.

****

Interpretation

Reference is made to the non-mandatory *MSC*/Circ.1279 "Guidelines for corrosion protection of permanent means of access arrangements", adopted by *MSC* 84 in May 2008.

****

4.4 Basic coating requirements

4.4.1 The requirements for protective coating systems to be applied at ship construction for dedicated seawater ballast tanks of all ship types and double-side skin spaces arranged in bulk carriers of 150 *m* in length and upward meeting the performance standard specified in **4.1** are listed in **table 1**.

4.4.2 Coating manufacturers shall provide a specification of the protective coating system to satisfy the requirements of **table 1**.

4.4.3 The Administration shall verify the Technical Data Sheet and Statement of Compliance or Type Approval Certificate for the protective coating system.

4.4.4 The shipyard shall apply the protective coating in accordance with the verified Technical Data Sheet and its own verified application procedures.

Table 1 Basic Coating System Requirements for Dedicated Seawater Ballast Tanks of All Type of Ships and Double-side Skin Spaces of Bulk Carriers of 150 *m* and Upwards

	Characteristic/ Reference Standards	Requirement
1 Design of coating system		
.1	Selection of the coating system	The selection of the coating system should be considered by the parties involved with respect to the service conditions and planned maintenance. The following aspects, among other things should be considered: .1 location of space relative to heated surfaces; .2 frequency of ballasting and deballasting operations; .3 required surface conditions; .4 required surface cleanliness and dryness; and .5 supplementary cathodic protections, if any (where coating is supplemented by cathodic protection, the coating shall be compatible with the cathodic protection system). Coating manufacturers shall have products with documented satisfactory performance records and technical data sheets. The manufacturers shall also be capable of rendering adequate technical assistance. Performance records, technical data sheet and technical assistance (if given) shall be recorded in the Coating Technical File. Coatings for application underneath sun-heated decks or on bulkheads forming boundaries of heated spaces shall be able to withstand repeated heating and/or cooling without becoming brittle.
.2	Coating type	Epoxy based systems. Other coating systems with performance according to the test procedure in **annex 1**. A multi-coat system with each coat of contrasting colour is recommended. The top coat shall be of a light colour in order to facilitate in-service inspection.
.3	Coating pre-qualification test	Epoxy based systems tested prior to the date of entry into force of this Standard in a laboratory by a method corresponding to the test procedure in **annex 1** or equivalent, which as a minimum meets the requirements for rusting and blistering; or which have documented field exposure for 5 years with a final coating condition of not less than “GOOD” may be accepted. For all other systems, testing according to the procedure in **annex 1**, or equivalent, is required.

.4	Job specification	There shall be a minimum of two stripe coats and two spray coats, except that the second stripe coat, by way of welded seams only, may be reduced in scope where it is proven that the NDFT can be met by the coats applied in order to avoid unnecessary over thickness. Any reduction in scope of the second stripe coat shall be fully detailed in the CTF. Stripe coats shall be applied by brush or roller. Roller to be used for scallops, ratholes, etc., only. Each main coating layer shall be appropriately cured before application of the next coat, in accordance with coating manufacturer's recommendations. Surface contaminants such as rust, grease, dust, salt, oil, etc. shall be removed prior to painting with proper method according to the paint manufacturer's recommendation. Abrasive inclusions embedded in the coating shall be removed. Job specifications shall include the dry-to-recoat times and walk-on time given by the manufacturer.
.5	NDFT (nominal total dry film thickness)[5]	NDFT 320 μm with 90/10 rule for epoxy based coatings; other systems to coating manufacturer's specifications. Maximum total dry film thickness according to manufacturer's detailed specifications. Care shall be taken to avoid increasing the thickness in an exaggerated way. Wet film thickness shall be regularly checked during application. Thinner shall be limited to those types and quantities recommended by the manufacturer.
2 PSP (Primary Surface Preparation)		
.1	Blasting and Profile.[6, 7]	Sa2½; with profiles between 30-75 μm Blasting shall not be carried out when: .1 the relative humidity is above 85%; or .2 the surface temperature of steel is less than 3°C above the dew point. Checking of the steel surface cleanliness and roughness profile shall be carried out at the end of the surface preparation and before the application of the primer, in accordance with the manufacturer's recommendations.
.2	Water soluble salt limit equivalent to NaCl [8]	≤ 50 mg/m^2 of sodium chloride.
.3	Shop primer	Zinc containing inhibitor free zinc silicate based or equivalent. Compatibility with main coating system shall be confirmed by the coating manufacturer.
3 Secondary surface preparation		
.1	Steel condition[9]	The steel surface shall be prepared so that the coating selected can achieve an even distribution at the required NDFT and have an adequate adhesion by removing sharp edges, grinding weld beads and removing weld spatter and any other surface contaminant. Edges shall be treated to a rounded radius of minimum 2 mm, or subjected to three pass grinding or at least equivalent process before painting.

.2	Surface treatment[6]	Sa2 1/2on damaged shop primer and welds. Sa2 removing at least 70% of intact shop primer, which has not passed a prequalification certified by test procedures in **1.3**. If the complete coating system comprising epoxy-based main coating and shop primer has passed a pre-qualification certified by test procedures in **1.3**, intact shop primer may be retained provided the same epoxy coating system is used. The retained shop primer shall be cleaned by sweep blasting, high pressure water washing or equivalent method. If a zinc silicate shop primer has passed the pre-qualification test of **1.3** as part of an epoxy coating system, it may be used in combination with other epoxy coatings certified under **1.3**, provided that the compatibility has been confirmed by the manufacturer by the test in accordance with **1.7** of **appendix 1** to **annex 1** without wave movement.
.3	Surface treatment after erection[6]	Butts St3 or better or Sa2 1/2 where practicable. Small damages up to 2% of total area: St3. Contiguous damages over 25 m^2 or over 2% of the total area of the tank, Sa2 1/2 shall be applied. Coating in overlap to be feathered.
.4	Profile requirements[7]	In case of full or partial blasting 30-75 μm, otherwise as recommended by the coating manufacturer.
.5	Dust[10]	Dust quantity rating "1" for dust size class "3", "4" or "5". Lower dust size classes to be removed if visible on the surface to be coated without magnification.
.6	Water soluble salts limit equivalent to NaCl after blasting/ grinding[8]	≤ 50 mg/m^2 of sodium chloride.
.7	Oil contamination	No oil contamination.
4 Miscellaneous		
.1	Ventilation	Adequate ventilation is necessary for the proper drying and curing of coating. Ventilation should be maintained throughout the application process and for a period after application is completed, as recommended by the coating manufacturer.
.2	Environmental conditions	Coating shall be applied under controlled humidity and surface conditions, in accordance with the manufacturer's specifications. In addition, coating shall not be applied when: .1 the relative humidity is above 85%; or .2 the surface temperature is less than 3°C above the dew point.
.3	Testing of coating[5]	Destructive testing shall be avoided. Dry film thickness shall be measured after each coat for quality control purpose and the total dry film thickness shall be confirmed after completion of final coat, using appropriate thickness gauges (*See* **annex 3**).
.4	Repair	Any defective areas, e.g. pin-holes, bubbles, voids, etc. should be marked up and appropriate repairs effected. All such repairs shall be re-checked and documented.

[5] Type of gauge and calibration in accordance with SSPC-PA2: 2004. *Paint Application Specification No.2.*

[6] Reference standard: *ISO* 8501-1: *1988/Suppl: 1994. Preparation of steel substrate before application of paints and related products – Visual assessment of surface cleanliness.*

[7] Reference standard: *ISO* 8503-1/2: *1988. Preparation of steel substrate before application of paints and related products – Surface roughness characteristics of blast-cleaned steel substrates.*

[8] Conductivity measured in accordance with the following standards:

.1 *ISO* 8502-9: *1998. Preparation of steel substrate before application of paints and related products – Test for the assessment of surface cleanliness*; or

.2 *NACE SP*0508-2010 *Item no*.21134. *Standard practice methods of validating equivalence to ISO* 8502-9 *on measurement of the levels of soluble salts.*

[9] Reference standard: *ISO* 8501-3: *2001 (grade P2). Preparation of steel substrate before application of paints and related products – Visual assessment of surface cleanliness.*

[10] Reference standard: *ISO* 8502-3:*1993. Preparation of steel substrate before application of paints and related products – Test for the assessment of surface cleanliness.*

****

Interpretation regarding Table 1

1 Design of coating system

1.3 Coating pre-qualification test

Procedure for Coating System Approval

Type Approval Certificate showing compliance with the PSPC 5 shall be issued if the results of either method A+D, or B+D, or C+D are found satisfactory by the Administration.

The Type Approval Certificate shall indicate the Product and the Shop Primer tested. The certificate shall also indicate other type approved shop primers with which the product may be used which have under gone the cross over test in a laboratory meeting the requirements in Method A, 1.1 of this UI.

The documents required to be submitted are identified in the following sections, in addition for all type approvals the following documentation is required:

Technical Data Sheet showing all the information required by PSPC 3.4.2.2.

Winter type epoxy is required separate prequalification test including shop primer compatibility test according to PSPC Annex 1. Winter and summer type coating are considered different unless Infrared (IR) identification and Specific Gravity (SG) demonstrates that they are the same.

Method A: Laboratory Test

1.1 Coating pre-qualification test shall be carried out by the test laboratory which is recognised by the Administration and the test laboratory shall meet the requirements set out in IACS UR Z17.

1.2 Results from satisfactory pre-qualification tests (PSPC Table 1: 1.3) of the coating system shall be documented and submitted to the Administration.

1.3.1 Type Approval tests shall be carried out for the epoxy based system with the stated shop primer in accordance with the PSPC Annex 1. If the tests are satisfactory, a Type Approval Certificate will be issued to include both the epoxy and the shop primer. The Type Approval Certificate will allow the use of the epoxy either with the named shop primer or on bare prepared steel.

1.3.2 An epoxy based system may be used with shop primers other than the one with which it was originally tested provided that, the other shop primers are approved as part of a system, PSPC Table 1: 2.3 and Table 1: 3.2, and have been tested according to PSPC Annex 1, Appendix 1, 1.7, which is known as the "Crossover Test". If the test or tests are satisfactory, a Type Approval Certificate will be issued. In this instance the Type Approval Certificate will include the details of the epoxy and a list of all shop primers with which it has been tested that have passed these requirements. The Type Approval Certificate will allow the use of the epoxy with all the named shop primers or on bare prepared steel.

1.3.3 Alternatively the epoxy can be tested without shop primer on bare prepared steel to the requirements of the PSPC Annex 1. If the test or tests are satisfactory, a Type Approval Certificate will be issued. The Type Approval Certificate will just record the epoxy. The certificate will allow the use of the epoxy on bare prepared steel only. If in addition, crossover tests are satisfactorily carried out with shop primers, which are approved as part of a system, the Type Approval Certificate will include the details of shop primers which have satisfactorily passed the crossover test. In this instance the Type Approval Certificate will allow the use of the epoxy based system with all the named shop primers or on bare prepared steel.

1.3.4 The Type Approval Certificate is invalid if the formulation of either the epoxy or the shop primer is changed. It is the responsibility of the coating manufacturer to inform the Administration immediately of any changes to the formulation.

1.3.5 For the coating pre-qualification test, the measured average dry film thickness (DFT) on each prepared test panels shall not exceed a nominal DFT (NDFT) of 320 microns plus 20% unless a paint manufacturer specifies a NDFT greater than 320 microns. In the latter case, the average DFT shall not exceed the specified NDFT plus 20% and the coating system shall be certified to the specified NDFT if the system passes the tests according to Annex 1 of MSC 215(82). The measured DFT shall meet the "90/10" rule and the maximum DFT shall be below the maximum DFT value specified by the manufacturer.

Method B: 5 years field exposure

1.4 Coating manufacturer's records, which shall at least include the information indicated in **1.4.1**, shall be examined to confirm coating system has 5 years field exposure, and the current product is the same as that being assessed.

1.4.1 Manufacturer's Records

- Original application records
- Original coating specification
- Original technical data sheet
- Current formulation's unique identification (Code or number)
- If the mixing ratio of base and curing agent has changed, a statement from the coating manufacturer confirming that the composition mixed product is the same as the original composition. This shall be accompanied by an explanation of the modifications made.
- Current technical data sheet for the current production site
- SG and IR identification of original product
- SG and IR identification of the current product
- If original SG and IR cannot be provided then a statement from the coating manufacturer confirming the readings for the current product are the same as those of the original.

1.5 Either class survey records from an Administration or a joint (coating manufacturer and Administration) survey of all ballast tanks of a selected vessel is to be carried out for the purpose of verification of compliance with the requirements of 1.4 and 1.9. The reporting of the coating condition in both cases shall be in accordance with the IACS Recommendation 87, section 2 (IACS Recommendation 87 is not mandatory).

1.6 The selected vessel is to have ballast tanks in regular use, of which:

- At least one tank is approximately 2,000 m^3 or more in capacity
- At least one tank shall be adjacent to a heated tank and
- At least one tank contains an underdeck exposed to the sun.

1.7 In the case that the selected vessel does not meet the requirements in **1.6** then the limitations shall be clearly stated on the type approval certificate. For example, the coating cannot be used in tanks adjacent to heated tanks or underdeck or tanks with volume greater than the size surveyed.

1.8 In all cases of approval by Method B, the shop primer shall be removed prior to application of the approved epoxy based system coating, unless it can be confirmed that the shop primer applied during construction, is identical in formulation to that applied in the selected vessel used as a basis of the approval.

1.9 All ballast tanks shall be in "GOOD" condition excluding mechanical damages, without touch up or repair in the prior 5 years.

1.9.1 "Good" is defined as: Condition with spot rusting on less than 3% of the area under consideration without visible failure of the coating. Rusting at edges or welds, must be on less than 20% of edges or welds in the area under consideration.

1.9.2 Examples of how to report coating conditions with respect to areas under consideration should be as those given in IACS Recommendation 87.

1.10 If the applied NDFT is greater than required by the PSPC, the applied NDFT will be the minimum to be applied during construction. This will be reported prominently on the Type Approval Certificate.

1.11 If the results of the inspection are satisfactory, a Type Approval Certificate shall be issued to include both the epoxy based system and the shop primer. The Type Approval Certificate shall allow the use of the epoxy based system either with the named shop primer or on bare prepared steel. The Type Approval Certificate shall reference the inspection report which will also form part of the Coating Technical File.

1.12 The Type Approval Certificate is invalid if the formulation of either the epoxy based system or the shop primer is changed. It is the responsibility of the coating manufacturer to inform the Administration immediately of any changes to the formulation.

Method C: Existing Marintek B1 Approvals

1.13 Epoxy based system Coatings Systems with existing satisfactory Marintek test reports minimum level B1 including relevant IR identification and SG, issued before 8 December 2006 can be accepted. If original SG and IR documentation cannot be provided, then a statement shall be provided by the coating manufacturer confirming that the readings for the current product are the same as those of the original.

1.14 The Marintek test report with IR and SG information shall be reviewed and if satisfactory, a Type Approval certificate shall be issued. The certificate shall record the report reference and the shop primer used. The Type Approval Certificate shall allow the use of the epoxy based system either with the named shop primer, unless there is evidence to indicate that it is unsuitable, or on bare prepared steel.

1.15 The epoxy based system approved by this method may be used with other shop primers if satisfactory crossover tests are carried out with shop primers which are approved as part of a system, see Method A, 1.3.2. In this instance, the Type Approval Certificate will include the details of the epoxy based system and a list of all shop primers which have passed these requirements. The Type Approval Certificate will allow the use of the epoxy based system with all the named shop primers or on bare prepared steel.

1.16 Such coatings shall be applied in accordance with PSPC Table 1 rather than the application conditions used during the approval test which may differ from the PSPC, unless these are more stringent than PSPC Annex 1, for example if the NDFT is higher or high pressure water washing and or sweep blasting of the shop primer is used. In such cases these limiting conditions shall be added to the type approval certificate and shall be followed during coating application in the shipyard.

1.17 The Type Approval Certificate is invalid if the formulation of either the epoxy based system or the shop primer is changed. It is the responsibility of the coating manufacturer to inform the Administration immediately of any changes to the formulation.

Method D: Coating Manufacturer

1.18 The coating/shop primer manufacturer shall meet the requirements set out in IACS UR Z17 paragraphs 4, 5, 6 and 7, (except for 4.6) and paragraphs 1.18.1 to 1.18.6 below, which shall be verified by the Administration.

1.18.1 Coating Manufacturers

(a) Extent of Engagement – Production of coating systems in accordance with PSPC and this UI.

(b) These requirements apply to both the main coating manufacturer and the shop primer manufacturer where both coatings form part of the total system.

(c) The coating manufacturer should provide to the Administration the following information;

- A detailed list of the production facilities.
- Names and location of raw material suppliers will be clearly stated.
- A detailed list of the test standards and equipment to be used, (Scope of approval).
- Details of quality control procedures employed.
- Details of any sub-contracting agreements.
- List of quality manuals, test procedures and instructions, records, etc.
- Copy of any relevant certificates with their issue number and/or date e.g. Quality Management System certification.

(d) Inspection and audit of the manufacturer's facilities will be based on the requirements of the PSPC.

(e) With the exception of early 'scale up' from laboratory to full production, adjustment outside the limitations listed in the QC instruction referred to below is not acceptable, unless justified by trials during the coating system's development programme, or subsequent testing. Any such adjustments must be agreed by the formulating technical centre.

(f) If formulation adjustment is envisaged during the production process the maximum allowable limits will be approved by the formulating technical centre and clearly stated in the QC working procedures.

(g) The manufacturer's quality control system will ensure that all current production is the same formulation as that supplied for the Type Approval Certificate. Formulation change is not permissible without testing in accordance with the test procedures in the PSPC and the issue of a Type Approval Certificate by the Administration.

(h) Batch records including all QC test results such as viscosity, specific gravity and airless spray characteristics will be accurately recorded. Details of any additions will also be included.

(i) Whenever possible, raw material supply and lot details for each coating batch will be traceable. Exceptions may be where bulk supply such as solvents and pre-dissolved solid epoxies are stored in tanks, in which case it may only be possible to record the supplier's blend.

(j) Dates, batch numbers and quantities supplied to each coating contract will be clearly recorded.

1.18.2 All raw material supply must be accompanied the supplier's 'Certificate of Conformance'. The certificate will include all requirements listed in the coating manufacturer's QC system.

1.18.3 In the absence of a raw material supplier's certificate of conformance, the coating manufacturer must verify conformance to all requirements listed in the coating manufacturer's QC system.

1.18.4 Drums must be clearly marked with the details as described on the 'Type Approval Certificate'.

1.18.5 Product Technical Data Sheets must comply with all the PSPC requirements. The QC system will ensure that all Product Technical Data Sheets are current.

1.18.6 QC procedures of the originating technical centre will verify that all production units comply with the above stipulations and that all raw material supply is approved by the technical centre.

1.19 In the case that a coating manufacturer wishes to have products which are manufactured in different locations under the same name, then IR identification and SG shall be used to demonstrate that they are the same coating, or individual approval tests will be required for the paint manufactured in each location.

1.20 The Type Approval Certificate is invalid if the formulation of either the epoxy based system or the shop primer is changed. It is the responsibility of the coating manufacturer to inform class immediately of any changes to the formulation. Failure to inform class of an alteration to the formulation will lead to cancellation of the certificates for that manufacturer's products.

Interpretation regarding 1.4 Job specification and 1.5 NDFT (nominal total dry film thickness)

Wet film thickness shall be regularly checked during application for quality control by the Builder. PSPC does not state who should check WFT, it is accepted for this to be the Builder. Measurement of DFT shall be done as part of the inspection required in PSPC 6.

Stripe coats should be applied as a coherent film showing good film formation and no visible defects. The application method employed should insure that all areas that require stripe coating are properly coated by brush or roller. A roller may be used for scallops, ratholes etc., but not for edges and welds.

2 PSP (Primary Surface Preparation)

Interpretation regarding 2.2 Water soluble salt limit equivalent to NaCl

The conductivity of soluble salts is measured in accordance with ISO 8502-6 and ISO 8502-9 or equivalent method as validated according to NACE SP0508-2010, and compared with the conductivity of 50 mg/m^2 NaCl. If the measured conductivity is less than or equal to, then it is acceptable. Minimum readings to be taken are one (1) per plate in the case of manually applied shop primer. In cases where an automatic process for application of shop primer is used, there should be means to demonstrate compliance with PSPC through a Quality Control System, which should include a monthly test.

Interpretation regarding 2.3 Shop primer

Shop primers not containing zinc or not silicate based are considered to be "alternative systems" and therefore equivalency is to be established in accordance with Section 8 of the PSPC with test acceptance criteria for "alternative systems" given in Section 3.1 (right columns) of Appendixes 1 and 2 to Annex 1.

Interpretation regarding Procedure for review of Quality Control of Automated Shop Primer plants

1. It is recognised that the inspection requirements of PSPC 6.2 may be difficult to apply to an automated shop primer plant and a Quality Control approach would be a more practical way of enabling compliance with the requirements of PSPC.
2. As required in PSPC it is the responsibility of the coating inspector to confirm that the quality control procedures are ensuring compliance with PSPC.

3. When reviewing the Quality Control for automated shop primer plants the following procedures should be included.

3.1 Procedures for management of the blasting grit including measurement of salt and contamination.

3.2 Procedures recording the following; steel surface temperature, relative humidity, dewpoint.

3.3 Procedures for controlling or monitoring surface cleanliness, surface profile, oil, grease, dust and other contamination.

3.4 Procedures for recording/measuring soluble salts.

3.5 Procedures for verifying thickness and curing of the shop primer conforms to the values specified in the Technical Specification.

3 SSP (Secondary Surface Preparation)

Interpretation regarding 3.2 Surface treatment, 3.3 Surface treatment after erection, and 3.4 Profile requirement

Usually, the fillet welding on tank boundary watertight bulkhead is left without coating on block stage (because not yet be leakage tested), in which case it can be categorised as erection joint ("butt") to be power tooled to St 3.

Interpretation regarding 3.6 Water soluble salts limit equivalent to NaCl after blasting/grinding

The conductivity of soluble salts is measured in accordance with ISO 8502-6 and ISO 8502-9 or equivalent method as validated according to NACE SP0508-2010, and compared with the conductivity of 50 mg/m^2 NaCl. If the measured conductivity is less then or equal to, then it is acceptable.

All soluble salts have a detrimental effect on coatings to a greater or lesser degree. ISO 8502-9:1998 does not provide the actual concentration of NaCl. The % NaCl in the total soluble salts will vary from site to site. Minimum readings to be taken are one (1) reading per block/section/unit prior to applying.

4 Miscellaneous

4.3 Testing of coating

All DFT measurements shall be measured. Only the final DFT measurements need to be measured and reported for compliance with the PSPC by the qualified coating inspector. The Coating Technical File may contain a summary of the DFT measurements which typically will consist of minimum and maximum DFT measurements, number of measurements taken and percentage above and below required DFT. The final DFT compliance with the 90/10 practice shall be calculated and confirmed, see PSPC 2.8.

Interpretation regarding footnotes

Only the footnoted standards referred to in PSPC Table 1 are to be applied, i.e. they are mandatory.

****

5 COATING SYSTEM APPROVAL

Results from prequalification tests (**table 1**, **paragraph 1.3**) of the coating system shall be documented and a Statement of Compliance or Type Approval Certificate shall be issued if found satisfactory by a third party, independent of the coating manufacturer.

****

Interpretation

See Interpretation of PSPC Table 1: 1 Design of coating system, **1.3** Coating prequalification test.

****

6 COATING INSPECTION REQUIREMENTS

6.1 General

6.1.1 To ensure compliance with this Standard, the following shall be carried out by qualified coating inspectors certified to NACE Coating Inspector Level 2, FROSIO Inspector Level III or equivalent as verified by the Administration.

6.1.2 Coating inspectors shall inspect surface preparation and coating application during the coating process by carrying out, as a minimum, those inspection items identified in section **6.2** to ensure compliance with this Standard. Emphasis shall be placed on initiation of each stage of surface preparation and coatings application as improper work is extremely difficult to correct later in the coating progress. Representative structural members shall be non-destructively examined for coating thickness. The

inspector shall verify that appropriate collective measures have been carried out.

6.1.3 Results from the inspection shall be recorded by the inspector and shall be included in the CTF (refer to **annex 2** (Example of daily log and non-conformity report)).

****

Interpretation

Procedure for Assessment of Coating Inspectors' Qualifications

1. Coating inspectors required to carry out inspections in accordance with the PSPC 6 shall be qualified to NACE Coating Inspector Level 2, FROSIO Inspector Level III, or an equivalent qualification. Equivalent qualifications are described in 3 below.
2. However, only coating inspectors with at least 2 years relevant coating inspector experience and qualified to NACE Coating Inspector Level 2 or FROSIO Inspector Level III, or with an equivalent qualification, can write and/or authorise procedures, or decide upon corrective actions to overcome non-compliances.
3. Equivalent Qualification

3.1 Equivalent qualification is the successful completion, as determined by course tutor, of an approved course.

3.1.1 The course tutors shall be qualified with at least 2 years relevant experience and qualified to NACE Coating Inspector Level 2 or FROSIO Inspector Level III, or with an equivalent qualification.

3.1.2 Approved Course: A course that has a syllabus based on the issues associated with the PSPC including the following:

- Health Environment and Safety
- Corrosion
- Materials and design
- International standards referenced in PSPC
- Curing mechanisms
- Role of inspector
- Test instruments
- Inspection Procedures
- Coating specification
- Application Procedures
- Coating Failures
- Pre-job conference
- MSDS and product data sheet review
- Coating technical file
- Surface preparation
- Dehumidification
- Waterjetting
- Coating types and inspection criteria
- Specialised Application Equipment
- Use of inspection procedures for destructive testing and non destructive testing instruments.
- Inspection instruments and test methods
- Coating inspection techniques
- Cathodic protection
- Practical exercises, case studies.

Examples of approved courses may be internal courses run by the coating manufacturers or shipyards etc.

3.1.3 Such a course shall have an acceptable measurement of performance, such as an examination with both theoretical and practical elements. The course and examination shall be approved by the Administration.

3.2 Equivalent qualification arising from practical experience: An individual may be qualified without attending a course where it can be shown that the individual:

- has a minimum of 5-years practical work experience as a coating inspector of ballast tanks during new

construction within the last 10 years, and

- has successfully completed the examination given in 3.1.3.

4 Assistant to the coating inspectors

4.1 If the coating inspectors requires assistance from other persons to perform the part of the inspections, those persons shall perform the inspections under the coating inspector's supervision and shall be trained to the coating inspector's satisfaction.

4.2 Such training should be recorded and endorsed either by the inspector, the yard's training organisation or inspection equipment manufacturer to confirm competence in using the measuring equipment and confirm knowledge of the measurements required by the PSPC.

4.3 Training records shall be available for verification.

****

6.2 Inspection items

Construction stage		Inspection items
Primary surface preparation	1	The surface temperature of steel, the relative humidity and the dew point shall be measured and recorded before the blasting process starts and at times of sudden changes in weather.
	2	The surface of steel plates shall be tested for soluble salt and checked for oil, grease and other contamination.
	3	The cleanliness of the steel surface shall be monitored in the shop primer application process.
	4	The shop primer material shall be confirmed to meet the requirements of **2.3** of **table 1**.
Thickness		If compatibility with the main coating system has been declared, then the thickness and curing of the zinc silicate shop primer to be confirmed to conform to the specified values.
Block assembly	1	After completing construction of the block and before secondary surface preparation starts, a visual inspection for steel surface treatment including edge treatment shall be carried out. Any oil, grease or other visible contamination to be removed.
	2	After blasting/grinding/cleaning and prior to coating, a visual inspection of the prepared surface shall be carried out. On completion of blasting and cleaning and prior to the application of the first coat of the system, the steel surface shall be tested for levels of remaining soluble salts in at least one location per block.
	3	The surface temperature, the relative humidity and the dew point shall be monitored and recorded during the coating application and curing.
	4	Inspection to be performed of the steps in the coating application process mentioned in **table 1**.
	5	DFT measurements shall be taken to prove that the coating has been applied to the thickness as specified and outlined in **annex 3**.
Erection	1	Visual inspection for steel surface condition, surface preparation and verification of conformance to other requirements in **table 1**, and the agreed specification shall be performed.
	2	The surface temperature, the relative humidity and the dew point shall be measured and recorded before coating starts and regularly during the coating process.
	3	Inspection shall be performed of the steps in the coating application process mentioned in **table 1**.

7 VERIFICATION REQUIREMENTS

The following shall be carried out by the Administration prior to reviewing the Coating Technical File for the ship subject to this Standard:

.1 check that the Technical Data Sheet and Statement of Compliance or Type Approval Certificate comply with this Standard;

.2 check that the coating identification on representative containers is consistent with the coating identified in the Technical Data Sheet and Statement of Compliance or Type Approval Certificate;

.3 check that the inspector is qualified in accordance with the qualification standards in paragraph **6.1.1**;

.4 check that the inspector's reports of surface preparation and the coating's application indicate compliance with the manufacturer's Technical Data Sheet and Statement of Compliance or Type Approval Certificate; and

.5 monitor implementation of the coating inspection requirements.

****

Interpretation

Procedure for Verification of Application of the PSPC

1. The verification requirements of PSPC 7 shall be carried out by the Administration.

1.1 Monitoring implementation of the coating inspection requirements, as called for in PSPC 7.5 means checking, on a sampling basis, that the inspectors are using the correct equipment, techniques and reporting methods as described in the inspection procedures reviewed by the Administration.

2. Any deviations found under 1.1 shall be raised initially with the coating inspector, who is responsible for identifying and implementing the corrective actions.

3. In the event that corrective actions are not acceptable to the Administration or in the event that corrective actions are not closed out then the shipyard shall be informed.

4. A Passenger Ship Safety Certificate or Cargo Ship Safety Certificate or Cargo Ship Safety Construction Certificate, as appropriate, shall not be issued until all required corrective actions have been closed out to the satisfaction of the Administration.

****

8 ALTERNATIVE SYSTEMS

8.1 All systems that are not an epoxy based system applied according to **table 1** of this Standard are defined as an alternative system.

8.2 This Standard is based on recognised and commonly used coating systems. It is not meant to exclude other, alternative, systems with proven equivalent performance, for example non epoxy based systems.

8.3 Acceptance of alternative systems will be subject to documented evidence that they ensure a corrosion prevention performance at least equivalent to that indicated in this Standard.

8.4 As a minimum, the documented evidence shall consist of satisfactory performance corresponding to that of a coating system which conforms to the coating standard described in **section 4**, a target useful life of 15 years in either actual field exposure for 5 years with final coating condition not less than "GOOD" or laboratory testing. Laboratory test shall be conducted in accordance with the test procedure given in **annex 1** of this Standard.

ANNEX 1
TEST PROCEDURES FOR COATING QUALIFICATION FOR DEDICATED SEAWATER BALLAST TANK OF ALL TYPES OF SHIPS AND DOUBLE-SIDE SKIN SPACES OF BULK CARRIERS

1 Scope

These Procedures provide details of the test procedure referred to in **5** and **8.3** of this Standard.

2 Definitions

Coating specification means the specification of coating systems which includes the type of coating system, steel preparation, surface preparation, surface cleanliness, environmental conditions, application procedure, acceptance criteria and inspection.

3 Testing

Coating specification shall be verified by the following tests. The test procedures shall comply with **appendix 1** (Test on simulated ballast tank conditions) and **appendix 2** (Condensation chamber tests) to this Annex as follows:

.1 for protective coatings for dedicated seawater ballast tanks, **appendix 1** and **appendix 2** shall apply.

.2 for protective coatings for double-side spaces of bulk carriers of 150 *m* in length and upwards other than dedicated seawater ballast tanks, **appendix 2** shall apply.

****

Interpretation

Only the footnoted standards referred to in Annex 1 are to be applied, i.e. they are mandatory.

****

APPENDIX 1 TEST ON SIMULATED BALLAST TANK CONDITIONS

1 Test condition

Test on simulated ballast tank conditions shall satisfy each of the following conditions:

.1 The test shall be carried out for 180 days.

.2 There are to be 5 test panels.

.3 The size of each test panel is 200 *mm* × 400 *mm* × 3 *mm*. Two of the panels (Panel 3 and 4 below) have a U-bar welded on. The U-bar is welded to the panel in a 120 *mm* distance from one of the short sides and 80 *mm* from each of the long sides.

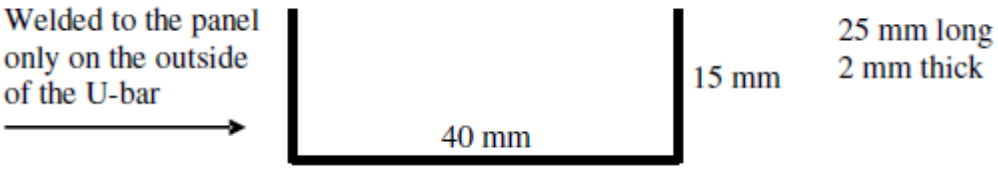

The panels are to be treated according to this Standard, **table 1.1**, **1.2** and **table 1.3**, and coating system applied according to **table 1**, **paragraphs 1.4** and **1.5**. Shop primer to be weathered for at least 2 months and cleaned by low pressure washing or other mild method. Blast sweep or high pressure washing, or other primer removal methods not to be used. Weathering method and extent shall take into consideration that the primer is to be the foundation for a 15 year target useful life system. To facilitate innovation, alternative preparation, coating systems and dry film thicknesses may be used when clearly defined.

.4 The reverse side of the test piece shall be painted appropriately, in order not to affect the test results.

.5 As simulating the condition of actual ballast tank, the test cycle runs for two weeks with natural or artificial seawater and one week empty. The temperature of the seawater is to be kept at about 35°C.

.6 Test Panel 1: This panel is to be heated for 12 h at 50°C and cooled for 12 h at 20°C in order to simulate upper deck condition. The test panel is cyclically splashed with natural or artificial seawater in order to simulate a ship's pitching and rolling motion. The interval of splashing is 3 s or faster. The panel has a scribe line down to bare steel across width.

.7 Test Panel 2: This panel 2 has a fixed sacrificial zinc anode in order to evaluate the effect of cathodic protection. A circular 8 *mm* artificial holiday down to bare steel is introduced on the test panel 100 *mm* from the anode in order to evaluate the effect of the cathodic protection. The test panel is cyclically immersed with natural or artificial seawater.

.8 Test Panel 3: This panel is to be cooled on the reverse side, in order to give a temperature gradient to simulate a cooled bulkhead in a ballast wing tank, and splashed with natural or artificial seawater in order to simulate a ship's pitching and rolling motion. The gradient of temperature is approximately 20°C, and the interval of splashing is 3 s or faster. The panel has a scribe line down to bare steel across width.

.9 Test Panel 4: This panel is to be cyclically splashed with natural or artificial seawater in order to simulate a ship's pitching and rolling motion. The interval of splashing is 3 s or faster. The panel has a scribe line down to bare steel across width.

.10 Test Panel 5: This panel is to be exposed to dry heat for 180 days at 70°C to simulate boundary plating between heated bunker tank and ballast tank in double bottom.

Fig. 1 Wave Tank for Testing of Ballast Tank Coatings

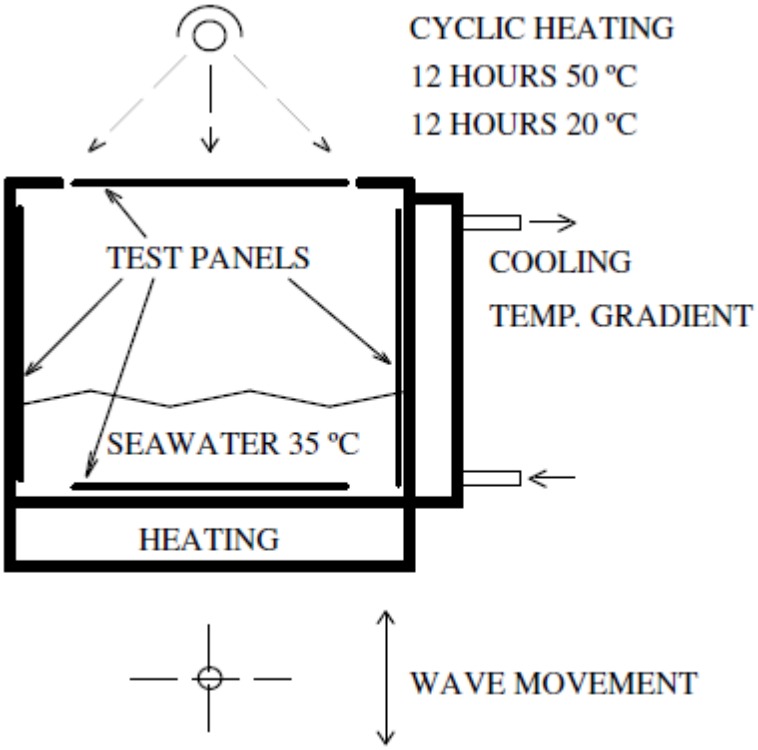

2 Test results

2.1 Prior to the testing, the following measured data of the coating system shall be reported:

.1 infrared (*IR*) identification of the base and hardener components of the coating;

.2 specific gravity[11] of the base and hardener components of the paint; and

.3 number of pinholes, low voltage detector at 90 V.

2.2 After the testing, the following measured data shall be reported:

.1 blisters and rust[12];

.2 dry film thickness (DFT) (use of a template)[13];

.3 adhesion value[14];

.4 flexibility[15] modified according to panel thickness (3 *mm* steel, 300 *μm* coating, 150 *mm* cylindrical mandrel gives 2% elongation) for information only;

.5 cathodic protection weight loss/current demand/disbondment from artificial holiday; and

.6 undercutting from scribe. The undercutting along both sides of the scribe is measured and the maximum undercutting determined on each panel. The average of the three maximum records is used for the acceptance.

[11] Reference standard: *ISO* 2811-1/4:1997. *Paints and varnishes. Determination of density.*

[12] Reference standards: *ISO* 4628/2:*2003. Paints and varnishes – Evaluation of degradation of coatings – Designation of quantity and size of defects, and of intensity of uniform changes in appearance – Part 2. ISO* 4628/3: *2003. Paints and varnishes – Evaluation of degradation of coatings – Designation of quantity and size of common types of defect – Part 3: Designation of degree of rusting.*

[13] Nine equally distributed measuring points are used on panel's size 150 *mm* x 150 *mm* or 15 equally distributed measuring points on panel's size 200 *mm* x 400 *mm*.

[14] Reference standard: *ISO* 4624:*2002. Pull-off test for adhesion.*

[15] Reference standards: *ASTM* D4145:*1983. Standard Test Method for Coating Flexibility of Prepainted Sheet.*

3 Acceptance criteria

3.1 The test results based on **section 2** shall satisfy the following criteria:

Item	Acceptance criteria for epoxy-based systems applied according to **table 1** of this Standard	Acceptance criteria for alternative systems
Blisters on panel	No blisters	No blisters
Rust on panel	Ri 0 (0%)	Ri 0 (0%)
Number of pinholes	0	0
Adhesive failure	> 3.5 *MPa* Adhesive failure between substrate and coating or between coats for 60% or more of the areas.	> 5 *MPa* Adhesive failure between substrate and coating or between coats for 60% or more of the areas.
Cohesive failure	> 3 *MPa* Cohesive failure in coating for 40% or more of the area.	> 5 *MPa* Cohesive failure in coating for 40% or more of the area.
Cathodic protection current demand calculated from weight loss	< 5 mA/m^2	< 5 mA/m^2
Cathodic protection; disbondment from artificial holiday	< 8 *mm*	< 5 *mm*
Undercutting from scribe	< 8 *mm*	< 5 *mm*
U-bar	Any defects, cracking or detachment at the angle or weld will lead to system being failed.	Any defects, cracking or detachment at the angle or weld will lead to system being failed.

3.2 Epoxy-based systems tested prior to the date of entry into force of this Standard shall satisfy only the criteria for blistering and rust in the table above.

3.3 Epoxy-based systems tested when applied according to **table 1** of this Standard shall satisfy the criteria for epoxy-based systems as indicated in the table above.

3.4 Alternative systems not necessarily epoxy-based and/or not necessarily applied according to **table 1** of this Standard shall satisfy the criteria for alternative systems as indicated in the table above.

4 Test report

The test report shall include the following information:

.1 name of the manufacturer;

.2 date of tests;

.3 product name/identification of both paint and primer;

.4 batch number;

.5 data of surface preparation on steel panels, including the following:

.5.1 surface treatment;

.5.2 water soluble salts limit;

.5.3 dust; and

.5.4 abrasive inclusions;

.6 application data of coating system, including the following:

.6.1 shop primed;

.6.2 number of coats;

.6.3 recoat interval[16];

.6.4 dry film thickness (DFT) prior to testing14;

.6.5 thinner[16];

.6.6 humidity[16];

.6.7 air temperature[16]; and

.6.8 steel temperature;

.7 test results according to **section 2**; and

.8 judgment according to **section 3**.

[16] Both of actual specimen data and manufacturer's requirement/recommendation.

APPENDIX 2 CONDENSATION CHAMBER TEST

1 Test condition

Condensation chamber test shall be conducted in accordance with applicable standards[17].

.1 The exposure time is 180 days.

.2 There are to be 2 test panels.

.3 The size of each test panel is $150\,mm \times 150\,mm \times 3\,mm$. The panels are to be treated according to the Performance Standard, **table 1**, **paragraphs 1**, **2** and **3** and coating system applied according to **table 1**, **paragraphs 1.4** and **1.5**. Shop primer to be weathered for at least 2 months and cleaned by low pressure washing or other mild method. Blast sweep or high pressure washing, or other primer removal methods not to be used. Weathering method and extent shall take into consideration that the primer is to be the foundation for a 15 year target life system. To facilitate innovation, alternative preparation, coating systems and dry film thicknesses may be used when clearly defined.

.4 The reverse side of the test piece shall be painted appropriately, in order not to affect the test results.

[17] Reference standard: *ISO* 6270-1:*1998 Paints and varnishes – Determination of resistance to humidity – Part 1: Continuous condensation.*

Fig. 2 Condensation Chamber

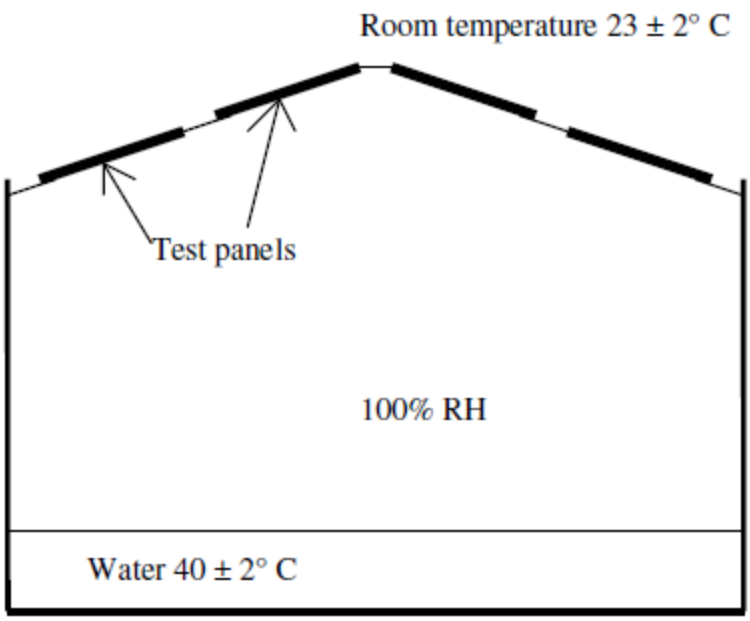

2 Test results

According to **section 2** (except for **2.2.5** and **2.2.6**) of **appendix 1**.

3 Acceptance criteria

3.1 The test results based on **section 2** shall satisfy the following criteria:

Item	Acceptance criteria for epoxy-based systems applied according to **table 1** of this Standard	Acceptance criteria for alternative systems
Blisters on panel	No blisters	No blisters
Rust on panel	Ri 0 (0%)	Ri 0 (0%)
Number of pinholes	0	0
Adhesive failure	> 3.5 *MPa* Adhesive failure between substrate and coating or between coats for 60% or more of the areas.	> 5 *MPa* Adhesive failure between substrate and coating or between coats for 60% or more of the areas.
Cohesive failure	> 3 *MPa* Cohesive failure in coating for 40% or more of the area.	> 5 *MPa* Cohesive failure in coating for 40% or more of the area.

3.2 Epoxy-based systems tested prior to the date of entry into force of this Standard shall satisfy only the criteria for blistering and rust in the table above.

3.3 Epoxy based systems tested when applied according to **table 1** of this Standard shall satisfy the criteria for epoxy-based systems as indicated in the table above.

3.4 Alternative systems not necessarily epoxy-based and/or not necessarily applied according to **table 1** of this Standard shall satisfy the criteria for alternative systems as indicated in the table above.

4 Test report

According to **section 4** of **appendix 1**.

ANNEX 2 EXAMPLE OF DAILY LOG AND NON-CONFORMITY REPORT

DAILY LOG **Sheet No:**

Ship:	**Tank/Hold No:**	**Database:**
Part of structure:		
SURFACE PREPARATION		
Method:	**Area (m^2):**	
Abrasive:	**Grain size:**	
Surface temperature:	**Air temperature:**	
Relative humidity (max):	**Dew point:**	
Standard achieved:		
Rounding of edges:		
Comments:		
Job No.:	**Date:**	**Signature:**

COATING APPLICATION:

Method:

Coat No.	System	Batch No.	Date	Air temp.	Surf temp.	RH%	Dew point	DFT* Meas.*	Specified

* Measured minimum and maximum DFT. DFT readings to be attached to daily log

Comments:

Job No:	**Date:**	**Signature:**

Non-conformity report **Sheet No:**

Ship:	**Tank/Hold No:**	**Database:**
Part of structure:		
DESCRIPTION OF THE INSPECTION FINDINGS TO BE CORRECTED		
Description of findings:		
Reference document (daily log):		
Action taken:		
Job No.:	**Date:**	**Signature:**

ANNEX 3 DRY FILM THICKNESS MEASUREMENTS

1 The following verification check points of DFT are to be taken:

.1 one gauge reading per 5 m^2 of flat surface areas;

.2 one gauge reading at 2 to 3 *m* intervals and as close as possible to tank boundaries, but not further than 15 *mm* from edges of tank boundaries;

.3 longitudinal and transverse stiffener members:

One set of gauge readings as shown below, taken at 2 to 3 *m* run and not less than two sets between primary support members;

Fig. 3

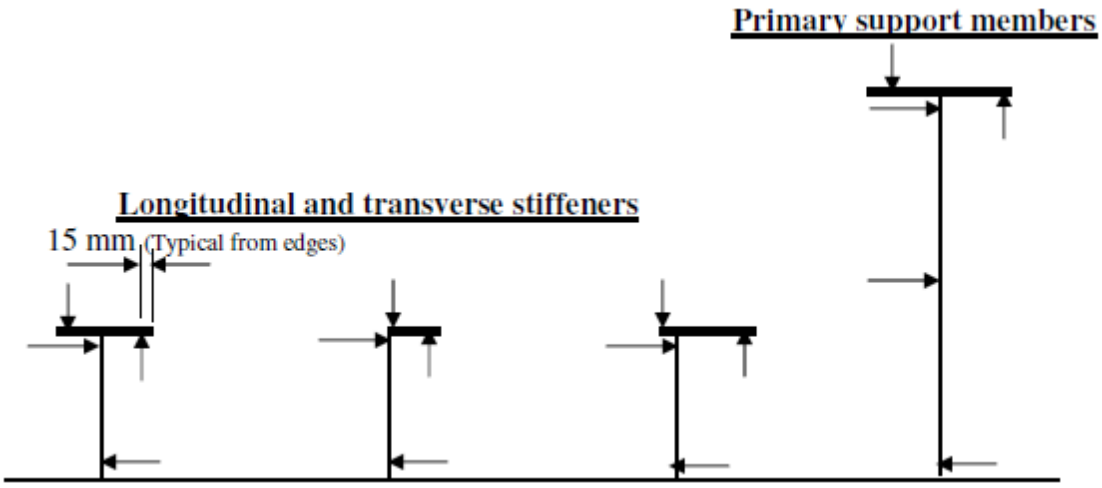

NOTE: Arrows of diagram indicate critical areas and should be understood to mean indication for both sides.

.4 3 gauge readings for each set of primary support members and 2 gauge readings for each set of other members as indicated by the arrows in the diagram;

.5 for primary support members (girders and transverses) one set of gauge readings for 2 to 3 *m* run as shown in **Fig. 3** above but not less than three sets;

.6 around openings one gauge reading from each side of the opening;

.7 five gauge readings per square metre (m^2) but not less than three gauge readings taken at complex areas (i.e. large brackets of primary support members); and

.8 additional spot checks to be taken to verify coating thickness for any area considered necessary by the coating inspector.

Appendix C6 PERFORMANCE STANDARD FOR PROTECTIVE COATINGS FOR CARGO OIL TANKS (Resolution MSC.288(87) and IACS Unified Interpretations SC259)

1 PURPOSE

This Standard provides technical requirements for the minimum standard for protective coatings to be applied in cargo oil tanks during the construction of new crude oil tankers.

2 DEFINITIONS

For the purpose of this Standard, the following definitions apply:

2.1 *Crude oil tanker* is as defined in Annex I of *MARPOL* 73/78.

2.2 *Dew point* is the temperature at which air is saturated with moisture.

2.3 *DFT* is dry film thickness.

2.4 *Dust* is loose particulate matter present on a surface prepared for painting, arising from blast-cleaning or other surface preparation processes, or resulting from the action of the environment.

2.5 *Edge grinding* is the treatment of the edge before secondary surface preparation.

2.6 "*GOOD*" *condition* is the condition with minor spot rusting as defined in resolution *A*.1049(27) (2011 *ESP* Code) for assessing the ballast tank coatings for tankers.

2.7 *Hard coating* is a coating that chemically converts during its curing process or a non-convertible air drying coating which may be used for maintenance purposes. This can be either inorganic or organic.

2.8 *NDFT* is the nominal dry film thickness. 90/10 practice means that 90% of all thickness measurements shall be greater than or equal to NDFT and none of the remaining 10% measurements shall be below 0.9× NDFT.

2.9 *Primer coat* is the first coat of the coating system applied in the shipyard after shop primer application.

2.10 *Shop-primer* is the prefabrication primer coating applied to steel plates, often in automatic plants (and before the first coat of a coating system).

2.11 *Stripe coating* is painting of edges, welds, hard to reach areas, etc., to ensure good paint adhesion and proper paint thickness in critical areas.

2.12 *Target useful life* is the target value, in years, of the durability for which the coating system is designed.

2.13 *Technical Data Sheet* is the paint manufacturer's Product Data Sheet which contains detailed technical instruction and information relevant to the coating and its application.

****

Interpretation

GOOD: Condition with spot rusting on less than 3% of the area under consideration without visible failure of the coating, or no-perforated blistering. Breakdown at edges or welds should be less than 20% of edges or weld lines in the area under consideration.

Coating Technical File: A term used for the collection of documents describing issues related to the coating system and its application from the point in time when the first document is provided and for the entire life of the ship including the inspection agreement and all elements of PSPC-COT 3.4.

****

3 GENERAL PRINCIPLES

3.1 The ability of the coating system to reach its target useful life depends on the type of coating system, steel preparation, operating environment, application and coating inspection and maintenance. All these aspects contribute to the good performance of the coating system.

3.2 Inspection of surface preparation and coating processes shall be agreed upon between the shipowner, the shipyard and the coating manufacturer and presented to the Administration for review. Clear evidence of these inspections shall be reported and included in the Coating Technical File (CTF) (*See* **3.4**).

****

Interpretation

1. Inspection of surface preparation and coating processes agreement shall be signed by shipyard, shipowner and coating manufacturer and shall be presented by the shipyard to the Administration for review prior to commencement of any coating work on any stage of a new building and as a minimum shall comply with the PSPC-COT.
2. To facilitate the review, the following from the CTF, shall be available:
   a) Coating specification including selection of areas (spaces) to be coated, selection of coating system, surface preparation and coating process.
   b) Statement of Compliance or Type Approval of the coating system.
3. The agreement shall be included in the CTF and shall at least cover:
   a) Inspection process, including scope of inspection, who carries out the inspection, the qualifications of the coating inspector(s) and appointment of one qualified coating inspector (responsible for verifying that the coating is applied in accordance with the PSPC-COT). Where more than one coating inspector will be used then their areas of responsibility shall be identified. (For example, multiple construction sites).
   b) Language to be used for documentation.
4. Any deviations in the procedure relative to the PSPC-COT noted during the review shall be raised with the shipyard, which is responsible for identifying and implementing the corrective actions.
5. Cargo Ship Safety Certificate or Cargo Ship Safety Construction Certificate, as appropriate, shall not be issued until all required corrective actions have been closed to the satisfaction of the Administration.

****

3.3 When considering the Standard provided in **section 4**, the following is to be taken into account:

.1 it is essential that specifications, procedures and the various different steps in the coating application process (including, but not limited to, surface preparation) are strictly applied by the shipbuilder in order to prevent premature decay and/or deterioration of the coating system;

.2 the coating performance can be improved by adopting measures at the ship design stage such as reducing scallops, using rolled profiles, avoiding complex geometric configurations and ensuring that the structural configuration permits easy access for tools and to facilitate cleaning, drainage and drying of the space to be coated; and

.3 the coating performance standard provided in this document is based on experience from manufacturers, shipyards and ship operators; it is not intended to exclude suitable alternative coating systems, providing a performance at least equivalent to that specified in this Standard is demonstrated. Acceptance criteria for alternative systems are provided in **section 8**.

3.4 Coating Technical File (CTF)

3.4.1 Specification of the cargo oil tank coating system applied, record of the shipyard's and shipowner's coating work, detailed criteria for coating selection, job specifications, inspection, maintenance and repair shall be included in the Coating Technical File required by resolution *MSC*.215(82).

3.4.2 New construction stage

The Coating Technical File shall contain at least the following items relating to this Standard and shall be delivered by the shipyard at new ship construction stage:

.1 copy of Statement of Compliance or Type Approval Certificate;

.2 copy of Technical Data Sheet, including:

.2.1 product name and identification mark and/or number;

.2.2 materials, components and composition of the coating system;

.2.3 minimum and maximum dry film thickness;

.2.4 application methods, tools and/or machines;

.2.5 condition of surface to be coated (de-rusting grade, cleanness, profile, etc.); and

.2.6 environmental limitations (temperature and humidity);

.3 shipyard work records of coating application, including:

.3.1 applied actual areas (*in square metres*) of coating in each cargo oil tank;

.3.2 applied coating system;

.3.3 time of coating, thickness, number of layers, etc.;

.3.4 ambient conditions during coating; and

.3.5 details of surface preparation;

.4 procedures for inspection and repair of coating system during ship construction;

.5 coating log issued by the coating inspector – stating that the coating was applied in accordance with the specifications to the satisfaction of the coating supplier representative and specifying deviations from the specifications (*See* **annex 2**);

.6 shipyard's verified inspection report, including:

.6.1 completion date of inspection;

.6.2 result of inspection;

.6.3 remarks (if given); and

.6.4 inspector signature; and

.7 procedures for in-service maintenance and repair of coating systems*.

* Refer to the "*Guidelines on procedures for in-service maintenance and repair of Coating systems for cargo oil tanks of crude oil tankers*" (*MSC*.1/*Circ*.1399).

3.4.3 In-service maintenance and repair

In-service maintenance and repair activities shall be recorded in the Coating Technical File in accordance with the relevant section of the Guidelines for coating maintenance and repair.

3.4.4 The Coating Technical File shall be kept on board and maintained throughout the life of the ship.

****

Interpretation

Procedure for Coating Technical File Review

1 The shipyard is responsible for compiling the Coating Technical File (CTF) either in paper or electronic format, or a combination of the two.

2 The CTF is to contain all the information required by the PSPC-COT 3.4 and the inspection of surface preparation and the coating processes agreement (*See* PSPC-COT 3.2).

3 The CTF shall be reviewed for content in accordance with the PSPC-COT 3.4.2.

4 Any deviations found under **-3** shall be raised with the shipyard, which is responsible for identifying and implementing the corrective actions.

5 Cargo Ship Safety Certificate or Cargo Ship Safety Construction Certificate, as appropriate, shall not be issued until all required corrective actions have been closed to the satisfaction of the Administration.

****

3.5 Health and safety

The shipyard is responsible for implementation of national regulations to ensure the health and safety of individuals and to minimise the risk of fire and explosion.

****

Interpretation

In order to document compliance with PSPC-COT 3.5, relevant documentation from the coating manufacturer concerning health and safety aspects such as Material Safety Data Sheet is recommended to be included in the CTF for information.

****

4 COATING STANDARD

4.1 Performance standard

This Standard is based on specifications and requirements to provide a target useful coating life of 15 years, which is considered to be the time period, from initial application, over which the coating system is intended to remain in "GOOD" condition. The actual useful life will vary, depending on numerous variables including actual conditions encountered in service.

4.2 Standard application

Protective coatings for cargo oil tanks applied during the construction of new crude oil tankers shall at least comply with the requirements in this Standard.

4.3 Coating system

An epoxy-based system meeting test and physical properties (**table 1.1.3**) shall be documented, and a Type Approval Certificate or Statement of Compliance shall be provided.

4.4 Area of application

The following areas are the minimum areas that shall be protected according to this Standard:

.1 Deckhead with complete internal structure, including brackets connecting to longitudinal and transverse bulkheads. In tanks with ring frame girder construction the underdeck transverse framing to be coated down to level of the first tripping bracket below the upper faceplate.

.2 Longitudinal and transverse bulkheads to be coated to the uppermost means of access level. The uppermost means of access and its supporting brackets to be fully coated.

.3 On cargo tank bulkheads without an uppermost means of access the coating to extend to 10% of the tanks height at centreline but need not extend more than 3 *m* down from the deck.

.4 Flat inner bottom and all structure to height of 0.3 *m* above inner bottom to be coated.

Fig. 1

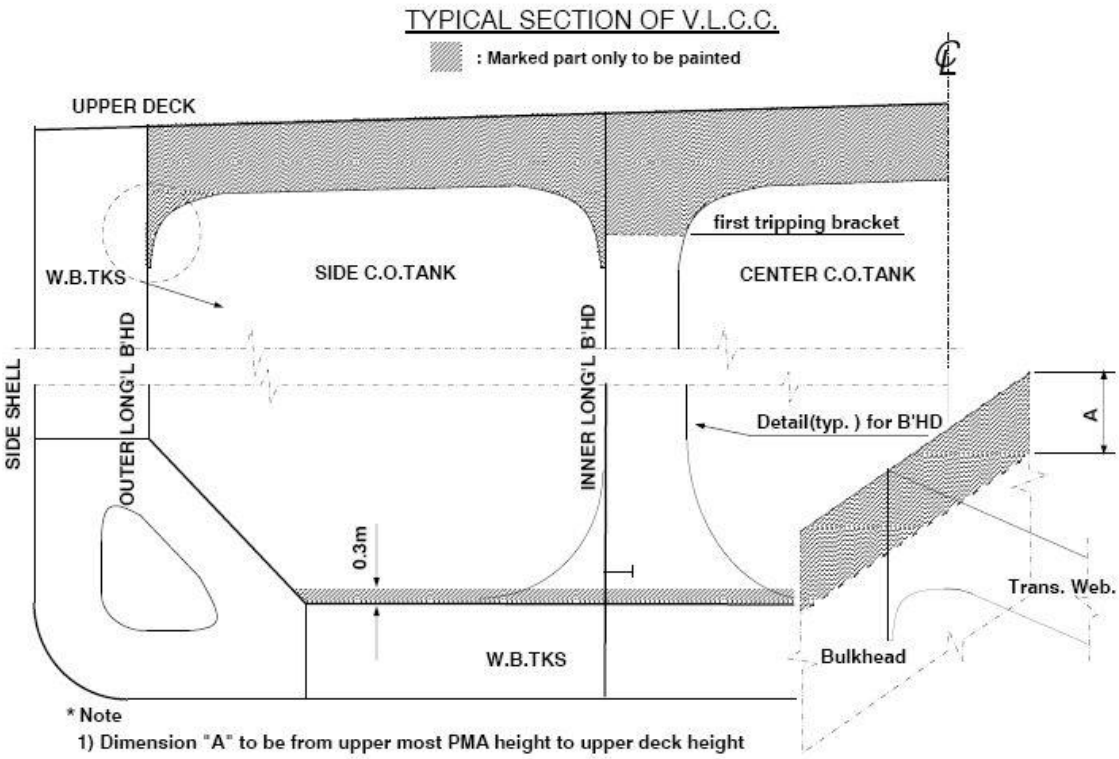

4.5 Special application

4.5.1 This Standard covers protective coating requirements for steel structure within cargo oil tanks. It is noted that there are other independent items that are fitted within the cargo oil tanks and to which coatings are applied to provide protection against corrosion.

4.5.2 It is recommended that this Standard is applied, to the extent practicable, to those portions of means of access provided for inspection within the areas specified in subsection **4.4** that are not integral to the ship structure, such as rails, independent platforms, ladders, etc. Other equivalent methods of providing corrosion protection for non-integral items may also be used, provided they do not impair the performance of the coatings of the surrounding structure. Access arrangements that are integral to the ship structure, such as stiffener depths for walkways, stringers, etc., are to fully comply with this Standard when located within the coated areas.

4.5.3 It is also recommended that supports for piping, measuring devices, etc., be coated as a minimum in accordance with the

non-integral items indicated in paragraph **4.5.2**.

****

Interpretation

Reference is made to the non-mandatory *MSC/Circ.*1279 "Guidelines for corrosion protection of permanent means of access arrangements", adopted by *MSC* 84 in May 2008.

****

4.6 Basic coating requirements

4.6.1 The requirements for protective coating systems to be applied at ship construction for the cargo oil tanks of crude oil tankers meeting the performance standard specified in paragraph **4.1** are listed in **table 1**.

4.6.2 Coating manufacturers shall provide a specification of the protective coating system to satisfy the requirements of **table 1** and the operating environment.

4.6.3 The Administration shall verify the Technical Data Sheet and Statement of Compliance or Type Approval Certificate for the protective coating system.

4.6.4 The shipyard shall apply the protective coating in accordance with the verified Technical Data Sheet and its own verified application procedures.

4.7 The referenced standards listed in this Standard are acceptable to the Organisation. Test equipment, test methods, preparation methods and/or test results shall conform to performance standards not inferior to those acceptable to the Organisation.

Table 1 Basic Coating System Requirements for Cargo Oil Tanks of Crude Oil Tankers

	Characteristic	Requirement
1 Design of coating system		
.1	Selection of the coating system	The selection of the coating system shall be considered by the parties involved with respect to the service conditions and planned maintenance. The following aspects, among other things shall be considered: .1 location of space relative to heated surfaces; .2 frequency of cargo operations; .3 required surface conditions; .4 required surface cleanliness and dryness; .5 supplementary cathodic protections, if any (where coating is supplemented by cathodic protection, the coating shall be compatible with the cathodic protection system); .6 permeability of the coating and resistance to inert gas and acids; and .7 appropriate mechanical properties (flexibility, impact resistance). The coating manufacturer shall supply products with documented satisfactory performance records and technical data sheets. The manufacturer shall also be capable of rendering adequate technical assistance. Performance records, technical data sheet and any manufacturer's technical assistance provided shall be recorded in the Coating Technical File. Coatings for application underneath sun-heated decks or on bulkheads forming boundaries of heated spaces shall be able to withstand repeated heating and/or cooling without becoming brittle.
.2	Coating type	Epoxy based systems. Other coating systems with performance according to the test procedure in **annex 1**. A multi-coat system with each coat of contrasting colour is recommended. The top coat shall be of a light colour to facilitate in-service inspection. Consideration should be given to the use of enhanced coatings in way of suction bellmouths and heating coil downcomers. Consideration should be given to the use of supplementary cathodic protection where there may be galvanic issues.
.3	Coating test	Epoxy based systems tested prior to the date of entry into force of this Standard in a laboratory by a method corresponding to the test procedure in **annex 1** or equivalent, which as a minimum meets the requirements for rusting and blistering; or which have documented field exposure for 5 years with a final coating condition of not less than “GOOD” may be accepted. For epoxy-based systems approved on or after entry into force of this Standard, testing according to the procedure in **annex 1**, or equivalent, is required.

	Characteristic	Requirement
.4	Job specification	There shall be a minimum of two stripe coats and two spray coats, except that the second stripe coat, by way of welded seams only, may be reduced in scope where it is proven that the NDFT can be met by the coats applied in order to avoid unnecessary over thickness. Any reduction in scope of the second stripe coat shall be fully detailed in the CTF. Stripe coats shall be applied by brush or roller. Roller shall be used for scallops, ratholes, etc. , only. Each main coating layer shall be appropriately cured before application of the next coat, in accordance with the coating manufacturer's recommendations. Job specifications shall include the dry-to-recoat times and walk-on time given by the manufacturer. Surface contaminants such as rust, grease, dust, salt, oil, etc., shall be removed prior to painting. The method to be according to the paint manufacturer's recommendations. Abrasive inclusions embedded in the coating shall be removed.
.5	NDFT (nominal total dry film thickness)[1]	NDFT 320 μm with 90/10 rule for epoxy based systems; other systems to coating manufacturer's specifications. Maximum total dry film thickness according to manufacturer's detailed specifications. Care shall be taken to avoid increasing the DFT in an exaggerated way. Wet film thickness shall be regularly checked during application. Thinner shall be limited to those types and quantities recommended by the manufacturer.
2 PSP (Primary Surface Preparation)		
.1	Blasting and Profile.[2, 3]	Sa2½; with profiles between 30-75 μm Blasting shall not be carried out when: .1 the relative humidity is above 85%; or .2 the surface temperature of steel is less than 3°C above the dew point. Checking of the steel surface cleanliness and roughness profile shall be carried out at the end of the surface preparation and before the application of the primer, and in accordance with the coating manufacturer's recommendations.
.2	Water soluble salt limit equivalent to NaCl[4]	$\leq 50\ mg/m^2$ of sodium chloride.
.3	Shop primer	Zinc containing inhibitor free zinc silicate based or equivalent. Compatibility with main coating system shall be confirmed by the coating manufacturer.
3 Secondary surface preparation		
.1	Steel condition[5]	The steel surface to be coated shall be prepared so that the coating selected can achieve an even distribution at the required NDFT and have an adequate adhesion by removing sharp edges, grinding weld beads and removing weld spatter and any other surface contaminant to grade P2.

	Characteristic	Requirement
		Edges to be treated to a rounded radius of minimum 2 *mm*, or subjected to three pass grinding or at least equivalent process before painting.
.2	Surface treatment[2]	Sa2½ on damaged shop primer and welds. All surfaces to be coated shall be blasted to Sa 2, removing at least 70% of intact shop primer, which has not passed a pre-qualification certified by test procedures in **1.3**. If the complete coating system comprising epoxy-based main coating and shop primer has passed a pre-qualification certified by test procedures in **1.3** intact shop primer may be retained provided the same epoxy-based system is used. Retained shop primer shall be cleaned by sweep blasting, high pressure water washing or equivalent method. If a zinc silicate shop primer has passed the pre-qualification test of **1.3** as part of an epoxy coating system, it may be used in combination with other epoxy coatings certified under **1.3**, provided that the compatibility has been confirmed by the manufacturer by the test with reference to the immersion test of **annex 1** or in accordance with the Performance standard for protective coatings for dedicated seawater ballast tanks in all types of ships and double-side skin spaces of bulk carriers (resolution *MSC*.215(82)).
.3	Surface treatment after erection	Erection joints St 3 or better or Sa 2½ where practicable. For inner bottom: - Damages up to 20% of the area to be coated to be treated to minimum St 3. - Contiguous damages over 25 m^2 or over 20% of the area to be coated, Sa 2½ shall be applied. For underdeck: - Damages up to 3% of area to be coated to be treated to minimum St 3. - Contiguous damages over 25 m^2 or over 3% of the area to be coated, Sa 2½ shall be applied. Coating in overlap to be feathered.
.4	Profile requirements[3]	In case of full or partial blasting 30-75 μm, otherwise as recommended by the coating manufacturer.
.5	Dust[6]	Dust quantity rating "1" for dust size class "3", "4" or "5". Lower dust size classes to be removed if visible on the surface to be coated without magnification.
.6	Water soluble salts limit equivalent to NaCl after blasting/ grinding[4]	≤ 50 mg/m^2 of sodium chloride.
.7	Contamination	No oil contamination. Paint manufacturer's recommendations should be followed regarding any other contamination between coats.
4 Miscellaneous		
.1	Ventilation	Adequate ventilation is necessary for the proper drying and curing of coating. Ventilation should be maintained throughout the application process and for a period after application is

	Characteristic	Requirement
		completed, as recommended by the coating manufacturer.
.2	Environmental conditions	Coating shall be applied under controlled humidity and surface conditions, in accordance with the manufacturer's specifications. In addition, coating shall not be applied when: .1 the relative humidity is above 85%; or .2 the surface temperature is less than 3°C above the dew point; or .3 any other requirements of the paint manufacturer are not being met.
.3	Testing of coating[1]	Destructive testing should be avoided. Sample dry film thickness shall be measured after each coat for quality control purpose and the total dry film thickness shall be confirmed after completion of the final coat, using appropriate thickness gauges.
.4	Repair	Any defective areas, e.g. pin-holes, bubbles, voids, etc. should be marked up and appropriate repairs effected. All such repairs shall be re-checked and documented.

[1] Type of gauge and calibration in accordance with SSPC-PA2: 2004. *Paint Application Specification No.2.*

[2] Refer to standard: *ISO* 8501-1: *1988/Suppl: 1994. Preparation of steel substrate before application of paints and related products – Visual assessment of surface cleanliness.*

[3] Refer to standard: *ISO* 8503-1/2: *1988. Preparation of steel substrate before application of paints and related products – Surface roughness characteristics of blast-cleaned steel substrates.*

[4] Conductivity measured in accordance with the following standards:

.1 *ISO* 8502-9: *1998. Preparation of steel substrate before application of paints and related products – Test for the assessment of surface cleanliness*; or

.2 *NACE SP*0508-2010 *Item no.*21134. *Standard practice methods of validating equivalence to ISO* 8502-9 *on measurement of the levels of soluble salts.*

[5] Refer to standard: *ISO* 8501-3: *2001. Preparation of steel substrate before application of paints and related products – Visual assessment of surface cleanliness.*

[6] Refer to standard: *ISO* 8502-3:*1993. Preparation of steel substrate before application of paints and related products – Test for the assessment of surface cleanliness.*

****

Interpretation regarding Table 1

1 Design of coating system

1.3 Coating pre-qualification test

Procedure for Coating System Approval

Type Approval Certificate showing compliance with the PSPC-COT 5 shall be issued if the results of either method A+C or B+C are found satisfactory by the Administration.

The Type Approval Certificate shall indicate the Product and the Shop Primer tested. The certificate shall also indicate other type approved shop primers with which the product may be used which have under gone the cross over test in a laboratory meeting the requirements in Method A, 1.1 of this UI.

The documents required to be submitted are identified in the following sections, in addition for all type approvals the following documentation is required:

Technical Data Sheet showing all the information required by PSPC-COT 3.4.2.2.

Winter type epoxy is required separate prequalification test including shop primer compatibility test according to PSPC-COT Annex 1. Winter and summer type coating are considered different unless Infrared (IR) identification and Specific Gravity (SG) demonstrates that they are the same.

Method A: Laboratory Test

1.1 Coating pre-qualification test shall be carried out by the test laboratory which is recognised by the Administration.

1.2 Results from satisfactory pre-qualification tests (PSPC-COT Table 1: 1.3) of the coating system shall be documented and

submitted to the Administration.

1.3.1 Type Approval tests shall be carried out for the epoxy based system with the stated shop primer in accordance with the PSPC-COT Annex 1. If the tests are satisfactory, a Type Approval Certificate will be issued to include both the epoxy and the shop primer. The Type Approval Certificate will allow the use of the epoxy either with the named shop primer or on bare prepared steel.

1.3.2 An epoxy based system may be used with shop primers other than the one with which it was originally tested provided that, the other shop primers are approved as part of a system, PSPC-COT Table 1: 2.3 and Table 1: 3.2, and have been tested according to the immersion test of PSPC-COT Annex 1 or in accordance with Res.MSC.215(82), which is known as the "Crossover Test". If the test or tests are satisfactory, a Type Approval Certificate will be issued. In this instance the Type Approval Certificate will include the details of the epoxy and a list of all shop primers with which it has been tested that have passed these requirements. The Type Approval Certificate will allow the use of the epoxy with all the named shop primers or on bare prepared steel.

1.3.3 Alternatively the epoxy can be tested without shop primer on bare prepared steel to the requirements of the PSPC-COT Annex 1. If the test or tests are satisfactory, a Type Approval Certificate will be issued. The Type Approval Certificate will just record the epoxy. The certificate will allow the use of the epoxy on bare prepared steel only. If in addition, crossover tests are satisfactorily carried out with shop primers, which are approved as part of a system, the Type Approval Certificate will include the details of shop primers which have satisfactorily passed the crossover test. In this instance the Type Approval Certificate will allow the use of the epoxy based system with all the named shop primers or on bare prepared steel.

1.3.4 The Type Approval Certificate is invalid if the formulation of either the epoxy or the shop primer is changed. It is the responsibility of the coating manufacturer to inform the Administration immediately of any changes to the formulation.

1.3.5 For the coating pre-qualification test, the measured average dry film thickness (DFT) on each prepared test panels shall not exceed a nominal DFT (NDFT) of 320 microns plus 20% unless a paint manufacturer specifies a NDFT greater than 320 microns. In the latter case, the average DFT shall not exceed the specified NDFT plus 20% and the coating system shall be certified to the specified NDFT if the system passes the tests according to Annex 1 of PSPC-COT. The measured DFT shall meet the "90/10" rule and the maximum DFT shall be below the maximum DFT value specified by the manufacturer.

Method B: 5 years field exposure

1.4 Coating manufacturer's records, which shall at least include the information indicated in **1.4.1**, shall be examined to confirm coating system has 5 years field exposure, and the current product is the same as that being assessed.

1.4.1 Manufacturer's Records

- Original application records
- Original coating specification
- Original technical data sheet
- Current formulation's unique identification (Code or number)
- If the mixing ratio of base and curing agent has changed, a statement from the coating manufacturer confirming that the composition mixed product is the same as the original composition. This shall be accompanied by an explanation of the modifications made.
- Current technical data sheet for the current production site
- SG and IR identification of original product
- SG and IR identification of the current product
- If original SG and IR cannot be provided then a statement from the coating manufacturer confirming the readings for the current product are the same as those of the original.

1.5 Either class survey records from an Administration or a joint (coating manufacturer and Administration) survey of cargo tanks of a selected vessel is to be carried out for the purpose of verification of compliance with the requirements of **1.4** and **1.9**. The reporting of the coating condition in both cases shall be in accordance with the principles given in section 4 of *MSC*.1/*Circ*.1399.

1.6 The selected vessel is to have cargo tanks in regular use, of which:

- At least one tank is exposed to minimum temperature of 60 degree C plus or minus 3 degree
- For field exposure the ship should be trading in varied trade routes and carrying substantial varieties of crude oils including highest temperature and lowest pH limits to ensure a realistic sample: for example, three ships on three different trade areas with different varieties of crude cargoes.

1.7 In the case that the selected vessel does not meet the requirements in **1.6** then the limitations on lowest pH and Highest temperature of crude oils carried shall be clearly stated on the type approval certificate.

1.8 In all cases of approval by Method B, the shop primer shall be removed prior to application of the approved epoxy based system coating, unless it can be confirmed that the shop primer applied during construction, is identical in formulation to that applied in the selected vessel used as a basis of the approval.

1.9 All cargo oil tanks shall be in "GOOD" condition excluding mechanical damages, without touch up or repair in the prior 5 years.

1.9.1 "Good" is defined as: Condition with spot rusting on less than 3% of the area under consideration without visible failure of the coating, or no perforated blistering. Breakdown at edges or welds should be less than 20% of edges or welds in the area under consideration.

1.9.2 Examples of how to report coating conditions with respect to areas under consideration should be as those given in the principles given in section 4 of *MSC*.1/*Circ*.1399.

1.10 If the applied NDFT is greater than required by the PSPC, the applied NDFT will be the minimum to be applied during construction. This will be reported prominently on the Type Approval Certificate.

1.11 If the results of the inspection are satisfactory, a Type Approval Certificate shall be issued to include both the epoxy based system and the shop primer. The Type Approval Certificate shall allow the use of the epoxy based system either with the named shop primer or on bare prepared steel. The Type Approval Certificate shall reference the inspection report which will also form part of the Coating Technical File.

1.12 The Type Approval Certificate is invalid if the formulation of either the epoxy based system or the shop primer is changed. It is the responsibility of the coating manufacturer to inform the Administration immediately of any changes to the formulation.

Method C: Coating Manufacturer

1.13 The coating/shop primer manufacturer shall meet the requirements set out in IACS UR Z17 paragraphs 4, 5, 6 and 7, (except for 4.6) and paragraphs **1.13.1** to **1.13.6** below, which shall be verified by the Administration.

1.13.1 Coating Manufacturers

(a) Extent of Engagement – Production of coating systems in accordance with PSPC-COT and this UI.

(b) These requirements apply to both the main coating manufacturer and the shop primer manufacturer where both coatings form part of the total system.

(c) The coating manufacturer should provide to the Administration the following information;

- A detailed list of the production facilities.
- Names and location of raw material suppliers will be clearly stated.
- A detailed list of the test standards and equipment to be used, (Scope of approval).
- Details of quality control procedures employed.
- Details of any sub-contracting agreements.
- List of quality manuals, test procedures and instructions, records, etc.
- Copy of any relevant certificates with their issue number and/or date e.g. Quality Management System certification.

(d) Inspection and audit of the manufacturer's facilities will be based on the requirements of the PSPC-COT.

(e) With the exception of early 'scale up' from laboratory to full production, adjustment outside the limitations listed in the QC instruction referred to below is not acceptable, unless justified by trials during the coating system's development programme, or subsequent testing. Any such adjustments must be agreed by the formulating technical centre.

(f) If formulation adjustment is envisaged during the production process the maximum allowable limits will be approved by the formulating technical centre and clearly stated in the QC working procedures.

(g) The manufacturer's quality control system will ensure that all current production is the same formulation as that supplied for the Type Approval Certificate. Formulation change is not permissible without testing in accordance with the test procedures in the PSPC-COT and the issue of a Type Approval Certificate by the Administration.

(h) Batch records including all QC test results such as viscosity, specific gravity and airless spray characteristics will be accurately recorded. Details of any additions will also be included.

(i) Whenever possible, raw material supply and lot details for each coating batch will be traceable. Exceptions may be where bulk supply such as solvents and pre-dissolved solid epoxies are stored in tanks, in which case it may only be possible to record the supplier's blend.

(j) Dates, batch numbers and quantities supplied to each coating contract will be clearly recorded.

1.13.2 All raw material supply must be accompanied the supplier's 'Certificate of Conformance'. The certificate will include all requirements listed in the coating manufacturer's QC system.

1.13.3 In the absence of a raw material supplier's certificate of conformance, the coating manufacturer must verify conformance to all requirements listed in the coating manufacturer's QC system.

1.13.4 Drums must be clearly marked with the details as described on the 'Type Approval Certificate'.

1.13.5 Product Technical Data Sheets must comply with all the PSPC-COT requirements. The QC system will ensure that all Product Technical Data Sheets are current.

1.13.6 QC procedures of the originating technical centre will verify that all production units comply with the above stipulations and that all raw material supply is approved by the technical centre.

1.14 In the case that a coating manufacturer wishes to have products which are manufactured in different locations under the same name, then IR identification and SG shall be used to demonstrate that they are the same coating, or individual approval tests will be required for the paint manufactured in each location.

1.15 The Type Approval Certificate is invalid if the formulation of either the epoxy based system or the shop primer is changed. It is the responsibility of the coating manufacturer to inform class immediately of any changes to the formulation. Failure to inform class of an alteration to the formulation will lead to cancellation of the certificates for that manufacturer's products.

Interpretation regarding 1.4 Job specification and 1.5 NDFT (nominal total dry film thickness)

Wet film thickness shall be regularly checked during application for quality control by the Builder. PSPC-COT does not state who should check WFT, it is accepted for this to be the Builder. Measurement of DFT shall be done as part of the inspection required in PSPC-COT 6.

Stripe coats should be applied as a coherent film showing good film formation and no visible defects. The application method employed should insure that all areas that require stripe coating are properly coated by brush or roller. A roller may be used for scallops, ratholes etc., but not for edges and welds.

2 PSP (Primary Surface Preparation)

Interpretation regarding 2.2 Water soluble salt limit equivalent to NaCl

The conductivity of soluble salts is measured in accordance with *ISO* 8502-6 and *ISO* 8502-9 or equivalent method as validated according to NACE SP0508-2010, and compared with the conductivity of $50mg/m^2$ NaCl. If the measured conductivity is less than or equal to, then it is acceptable. Minimum readings to be taken are one (1) per plate in the case of manually applied shop primer. In cases where an automatic process for application of shop primer is used, there should be means to demonstrate compliance with PSPC-COT through a Quality Control System, which should include a monthly test.

Interpretation regarding 2.3 Shop primer

Shop primers not containing zinc or not silicate based are considered to be "alternative systems" and therefore equivalency is to be established in accordance with Section 8 of the PSPC-COT with test acceptance criteria for "alternative systems" given in Section 3.1 (right columns) of Appendixes 1 and 2 to Annex 1 of PSPC-COT.

Interpretation regarding Procedure for review of Quality Control of Automated Shop Primer plants

1 It is recognised that the inspection requirements of PSPC-COT 6.2 may be difficult to apply to an automated shop primer plant and a Quality Control approach would be a more practical way of enabling compliance with the requirements of PSPC-COT.

2 As required in PSPC it is the responsibility of the coating inspector to confirm that the quality control procedures are

ensuring compliance with PSPC-COT.

3 When reviewing the Quality Control for automated shop primer plants the following procedures should be included.

3.1 Procedures for management of the blasting grit including measurement of salt and contamination.

3.2 Procedures recording the following; steel surface temperature, relative humidity, dewpoint.

3.3 Procedures for controlling or monitoring surface cleanliness, surface profile, oil, grease, dust and other contamination.

3.4 Procedures for recording/measuring soluble salts.

3.5 Procedures for verifying thickness and curing of the shop primer conforms to the values specified in the Technical Specification.

3 SSP (Secondary Surface Preparation)

Interpretation regarding 3.2 Surface treatment, 3.3 Surface treatment after erection, and 3.4 Profile requirement

Usually, the fillet welding on tank boundary watertight bulkhead is left without coating on block stage (because not yet be leakage tested), in which case it can be categorised as erection joint ("butt") to be power tooled to St 3.

Interpretation regarding 3.6 Water soluble salts limit equivalent to NaCl after blasting/grinding

The conductivity of soluble salts is measured in accordance with *ISO* 8502-6 and *ISO* 8502-9 or equivalent method as validated according to NACE SP0508-2010, and compared with the conductivity of 50 mg/m^2 NaCl. If the measured conductivity is less than or equal to, then it is acceptable.

All soluble salts have a detrimental effect on coatings to a greater or lesser degree. *ISO* 8502-9:1998 does not provide the actual concentration of NaCl. The % NaCl in the total soluble salts will vary from site to site. Minimum readings to be taken are one (1) reading per block/section/unit prior to applying.

4 Miscellaneous

4.3 Testing of coating

All DFT measurements shall be measured. Only the final DFT measurements need to be measured and reported for compliance with the PSPC-COT by the qualified coating inspector. The Coating Technical File may contain a summary of the DFT measurements which typically will consist of minimum and maximum DFT measurements, number of measurements taken and percentage above and below required DFT. The final DFT compliance with the 90/10 practice shall be calculated and confirmed, see PSPC-COT 2.8.

Interpretation regarding footnotes

Only the footnoted standards referred to in PSPC-COT Table 1 are to be applied, i.e. they are mandatory.

****

5 COATING SYSTEM APPROVAL

Results from prequalification tests (**table 1**, **paragraph 1.3**) of the coating system shall be documented, and a Statement of Compliance or Type Approval Certificate shall be issued if found satisfactory by a third party, independent of the coating manufacturer.

****

Interpretation

See Interpretation of PSPC-COT Table 1: 1 Design of coating system, **1.3** Coating prequalification test.

****

6 COATING INSPECTION REQUIREMENTS

6.1 General

6.1.1 To ensure compliance with this Standard, the following shall be carried out by qualified coating inspectors certified to NACE Coating Inspector Level 2, FROSIO Inspector Level III or equivalent as verified by the Administration.

6.1.2 Coating inspectors shall inspect surface preparation and coating application during the coating process by carrying out, as a minimum, those inspection items identified in subsection **6.2** to ensure compliance with this Standard. Emphasis shall be placed on initiation of each stage of surface preparation and coatings application as improper work is extremely difficult to correct later in the coating progress. Representative structural members shall be non-destructively examined for coating thickness. The inspector shall verify that appropriate collective measures have been carried out.

6.1.3 Results from the inspection shall be recorded by the inspector and shall be included in the CTF (see **annex 2**).

****

Interpretation

Procedure for Assessment of Coating Inspectors' Qualifications

1 Coating inspectors required to carry out inspections in accordance with the PSPC-COT 6 shall be qualified to NACE Coating Inspector Level 2, FROSIO Inspector Level III, or an equivalent qualification. Equivalent qualifications are described in **-3** below.

2 However, only coating inspectors with at least 2 years relevant coating inspector experience and qualified to NACE Coating Inspector Level 2 or FROSIO Inspector Level III, or with an equivalent qualification, can write and/or authorise procedures, or decide upon corrective actions to overcome non-compliances.

3 Equivalent Qualification

3.1 Equivalent qualification is the successful completion, as determined by course tutor, of an approved course.

3.1.1 The course tutors shall be qualified with at least 2 years relevant experience and qualified to NACE Coating Inspector Level 2 or FROSIO Inspector Level III, or with an equivalent qualification.

3.1.2 Approved Course: A course that has a syllabus based on the issues associated with the PSPC including the following:

- Health Environment and Safety
- Corrosion
- Materials and design
- International standards referenced in PSPC
- Curing mechanisms
- Role of inspector
- Test instruments
- Inspection Procedures
- Coating specification
- Application Procedures
- Coating Failures
- Pre-job conference
- MSDS and product data sheet review
- Coating technical file
- Surface preparation
- Dehumidification
- Waterjetting
- Coating types and inspection criteria
- Specialised Application Equipment
- Use of inspection procedures for destructive testing and non destructive testing instruments.
- Inspection instruments and test methods
- Coating inspection techniques
- Cathodic protection
- Practical exercises, case studies.

Examples of approved courses may be internal courses run by the coating manufacturers or shipyards etc.

3.1.3 Such a course shall have an acceptable measurement of performance, such as an examination with both theoretical and practical elements. The course and examination shall be approved by the Administration.

3.2 Equivalent qualification arising from practical experience: An individual may be qualified without attending a course where it can be shown that the individual:

- has a minimum of 5-years practical work experience as a coating inspector of ballast tanks and/or cargo tanks during new construction within the last 10 years, and
- has successfully completed the examination given in **3.1.3**.

4 Assistants to coating inspectors

4.1 If the coating inspectors requires assistance from other persons to perform the part of the inspections, those persons shall perform the inspections under the coating inspector's supervision and shall be trained to the coating inspector's satisfaction.

4.2 Such training should be recorded and endorsed either by the inspector, the yard's training organisation or inspection equipment manufacturer to confirm competence in using the measuring equipment and confirm knowledge of the measurements required by the PSPC-COT.

4.3 Training records shall be available for verification.

****

6.2 Inspection items

Construction stage		Inspection items
Primary surface preparation	1	The surface temperature of steel, the relative humidity and the dew point shall be measured and recorded before the blasting process starts and at times of sudden changes in weather.
	2	The surface of steel plates shall be tested for soluble salt checked for oil, grease and other contamination.
	3	The cleanliness of the steel surface shall be monitored in the shop primer application process.
	4	The shop primer material shall be confirmed to meet the requirements of **2.3** of **table 1**.
Thickness		If compatibility with the main coating system has been declared, then the thickness and curing of the zinc silicate shop primer to be confirmed to conform to the specified values.
Block assembly	1	After completing construction of the block and before secondary surface preparation starts, a visual inspection for steel surface treatment including edge treatment shall be carried out. Any oil, grease or other visible contamination to be removed.
	2	After blasting/grinding/cleaning and prior to coating, a visual inspection of the prepared surface shall be carried out. On completion of blasting and cleaning and prior to the application of the first coat of the system, the steel surface shall be tested for levels of remaining soluble salts in at least one location per block.
	3	The surface temperature, the relative humidity and the dew point shall be monitored and recorded during the coating application and curing.
	4	Inspection to be performed of the steps in the coating application process mentioned in **table 1**.
	5	DFT measurements shall be taken to prove that the coating has been applied to the thickness as specified.
Erection	1	Visual inspection for steel surface condition, surface preparation and verification of conformance to other requirements in **table 1**, and the agreed specification to be performed.
	2	The surface temperature, the relative humidity and the dew point shall be measured and recorded before coating starts and regularly during the coating process.
	3	Inspection to be performed of the steps in the coating application process mentioned in **table 1**.

7 COATING VERIFICATION REQUIREMENTS

The following shall be carried out by the Administration prior to reviewing the Coating Technical File for the ship subject to this Standard:

.1 check that the Technical Data Sheet and Statement of Compliance or Type Approval Certificate comply with the Standard;

.2 check that the coating identification on representative containers is consistent with the coating identified in the Technical Data Sheet and Statement of Compliance or Type Approval Certificate;

.3 check that the inspector is qualified in accordance with the qualification standards in paragraph **6.1.1**;

.4 check that the inspector's reports of surface preparation and the coating's application indicate compliance with the manufacturer's Technical Data Sheet and Statement of Compliance or Type Approval Certificate; and

.5 monitor implementation of the coating inspection requirements.

****

Interpretation

Procedure for Verification of Application of the PSPC-COT

1 The verification requirements of PSPC-COT 7 shall be carried out by the Administration.

1.1 Monitoring implementation of the coating inspection requirements, as called for in PSPC-COT 7.5 means checking, on a sampling basis, that the inspectors are using the correct equipment, techniques and reporting methods as described in the inspection procedures reviewed by the Administration.

2 Any deviations found under **1.1** shall be raised initially with the coating inspector, who is responsible for identifying and implementing the corrective actions.

3 In the event that corrective actions are not acceptable to the Administration or in the event that corrective actions are not closed out then the shipyard shall be informed.

4 Cargo Ship Safety Certificate or Cargo Ship Safety Construction Certificate, as appropriate, shall not be issued until all required corrective actions have been closed out to the satisfaction of the Administration.

****

8 ALTERNATIVE COATING SYSTEMS

8.1 All systems that are not an epoxy based system applied according to **table 1** of this Standard are defined as an alternative system.

8.2 This Standard is based on recognised and commonly used coating systems. It is not meant to exclude other, alternative, systems with proven equivalent performance, for example non epoxy based systems.

8.3 Acceptance of alternative systems shall be subject to documented evidence that they ensure a corrosion prevention performance at least equivalent to that indicated in this Standard, by either:

.1 testing according to this standard; or

.2 five years' field exposure with documentary evidence of continuous trading with crude oil cargoes.* The coating condition is not less than "GOOD" after five years.

* For field exposure the ship should be trading in varied trade routes and carrying substantial varieties of crude oils to ensure a realistic sample: for example, three ships on three different trade areas with different varieties of crude cargoes.

ANNEX 1
TEST PROCEDURES FOR COATING QUALIFICATION FOR CARGO OIL TANKS OF CRUDE OIL TANKERS

1 Scope

This Annex provides details of the test procedures for cargo tank coatings for crude oil carriers as referred to in paragraphs **4.6** and **8.3** of this Standard. Both the tank-top and deck-head should be applied with coating systems that have passed the full test protocol as described in this document.

2 Definitions

Coating specification means the specification of coating systems which include the type of coating system, steel preparation, surface preparation, surface cleanliness, environmental conditions, application procedure, inspection and acceptance criteria.

3 Background

It is acknowledged that a crude oil cargo tank on board a ship is exposed to two very different environmental conditions.

3.1 When the cargo tank is loaded there are three distinct vertical zones:

.1 Lowest part, and horizontal parts on stringer decks, etc., exposed to water that can be acidic and sludge that can contain anaerobic bacteria.

.2 Mid part where the oil cargo is in contact with all immersed steel.

.3 Vapour space where the air is saturated with various vapours from the loaded cargo tank such as H_2S, CO_2, SO_2, water vapour and other gases and compounds from the inert gas system.

3.2 When the tank is in a ballast condition:

.1 Lowest part and horizontal parts on stringer decks, etc., exposed to cargo residues and water that can be acidic and sludge that can contain anaerobic bacteria.

.2 Tank space where the air contains various vapours from the crude oil residues such as H_2S, CO_2, SO_2, water vapour and other gases and compounds from the inert gas system.

4 Testing

The tests herein are designed to simulate, as far as practicable, the two main environmental conditions to which the crude oil cargo tank coating will be exposed. The coating shall be validated by the following tests: the test procedures shall comply with **Appendix 1** (Gas-tight chamber simulating the vapour phase of the loaded tank) and **Appendix 2** (Immersion test simulating the loaded condition of the crude oil tank[1])

[1] Related test method is derived from, but not identical to, standard *ISO* 2812-1:*2007 - Paints and varnishes - Determination of resistance to liquids - Part 1: Immersion in liquids other than water*.

5 Test gas composition

The test gas is based on the composition of the vapour phase in crude oil tanks, except that the hydrocarbon components are not included as these have no detrimental effect on epoxy coatings such as those used in cargo oil tanks.

TEST GAS COMPOSITION

N_2	83 ± 2 %vol.
CO_2	13 ± 2 %vol.
O_2	4 ± 1 %vol.
SO_2	300 ± 20 *ppm*
H_2S	200 ± 20 *ppm*

6 Test liquid

Crude oil is a complex chemical material which is not stable over time when stocked. Crude oils can also vary in composition over time. In addition the use of crude oil has proven to create practical and HSE barriers for the involved testing institutes. To

overcome this, a model immersion liquid is used to simulate crude oil. The formulation of this crude oil model system is given below:

.1 start with distillate Marine Fuel, DMA Grade[2] density at 15ºC: maximum 890 kg/m^3, viscosity of maximum 6 mm^2/s at 40ºC;

.2 add naphthenic acid up to an acid number[3] of 2.5 ± 0.1 *mg KOH/g*;

.3 add benzene/ toluene (1:1 ratio) up to a total of 8.0 ± 0.2% *w/w* of the DMA;

.4 add artificial seawater[4] up to a total of 5.0 ± 0.2% *w/w* to the mixture;

.5 add H_2S dissolved in a liquid carrier (in order to get 5 ± 1 *ppm w/w* H_2S in the total test liquid);

.6 thoroughly mix the above constituents immediately prior to use; and

.7 once the mixture is completed, it should be tested to confirm the mixture is compliant with the test mixture concentrations.

Note: To prevent the risk of H_2S release into the test facility, it is recommended to use a stock solution for steps 1 to 4, then fill the test containers and complete the test solution with steps 5 and 6.

[2] Refer to *ISO* 8217:*2005. Petroleum products - Fuels (class F) - Specifications of marine fuels*.

[3] Refer to *ISO* 6618:*1997. Petroleum products and lubricants - Determination of acid or base number - Colour-indicator titration method*.

[4] Refer to *ASTM D*1141 - 98(*2008*) - *Standard Practice for the Preparation of Substitute Ocean Water*.

****

Interpretation

Only the footnoted standards referred to in **Annex 1** are to be applied, i.e. they are mandatory.

****

APPENDIX 1 GAS-TIGHT CABINET TEST

1 Test condition

The vapour test shall be carried out in a gas-tight cabinet. The dimensions and design of the air tight gas cabinet are not critical, provided the requirements of subparagraphs **.6** to **.10** below are met. The test gas is designed to simulate the actual crude oil cargo tank environment in ballast condition as well as the vapour conditions of the loaded tank.

.1 The exposure time is 90 days.

.2 Testing shall be carried out using duplicate panels; a third panel shall be prepared and stored at ambient conditions to act as a reference panel during final evaluation of the test panels.

.3 The size of each test panel is 150 *mm* × 100 *mm* × 3 *mm*.

.4 The panels shall be treated according to the Performance standard, **Table 1**, **1.2** and the coating system applied according to **Table 1**, **1.4** and **1.5**.

.5 The zinc silicate shop primer, when used, shall be weathered for at least 2 months and cleaned by low pressure fresh water washing. The exact method of shop primer preparation before being over coated shall be reported, and the judgement issued for that specific system. The reverse side and edges of the test piece shall be coated appropriately, in order not to influence the test results.

.6 Inside the gas-tight cabinet a trough shall be present. This trough shall be filled with 2 ± 0.2 *l* of water. The water in the trough shall be drained and renewed prior to each time the test gas is refreshed.

.7 The vapour spaces inside the gas-tight cabinet are to be filled with a mixture of test gas as per item **5** of the Standard. The cabinet atmosphere shall be maintained over the period of the test. When the gas is outside the scope of the test method, it shall be refreshed. The monitoring frequency and method, and the date and time for refreshing the test gas, shall be in the test report.

.8 The atmosphere in the test cabinet shall at all times be 95 ± 5% relative humidity.

.9 Temperature of the test atmosphere shall be 60 ± 3 °C.

.10 A stand for the test panels shall be made of a suitable inert material to hold the panels vertically spaced at least 20 *mm* between panels. The stand shall be positioned in the cabinet to ensure the lower edge of the panels is at least 200 *mm* above the height of the water and at least 100 *mm* from the walls of the cabinet. If two shelves are in the cabinet, care shall be taken to ensure solution does not drip on to the lower panels.

2 Test results

2.1 Prior to testing, the following measured data of each coating composing the coating system, including the zinc silicate shop primer when used under the coating system, shall be reported:

.1 infrared (*IR*) identification of the base and hardener components of the coating;

.2 specific gravity[1] of the base and hardener components of the paint; and

.3 mean dry film thickness (*DFT*) (by using a template). [2]

2.2 After completion of the test duration, the panels shall be removed from the cabinet and rinsed with warm tap water. The panels shall be dried by blotting with absorbent paper and, then, evaluated for rust and blistering within 24 *h* of the end of the test.

2.3 After testing, the measured data of blisters and rust are to be reported. [3, 4, 5]

[1] Refer to *ISO* 2811-1/4:*1997. Paints and varnishes. Determination of density*.

[2] Six equally distributed measuring points are used on panels size 150 *mm* × 100 *mm*.

[3] *ISO* 4628-1:*2003. Paints and varnishes – Evaluation of degradation of coatings – Designation of quantity and size of defects, and of intensity of uniform changes in appearance – Part 1: General introduction and designation system*.

[4] *ISO* 4628-2:*2003. Paints and varnishes – Evaluation of degradation of coatings – Designation of quantity and size of defects, and of intensity of uniform changes in appearance – Part 2: Assessment of degree of blistering*.

[5] *ISO* 4628-3:*2003. Paints and varnishes – Evaluation of degradation of coatings – Designation of quantity and size of defects, and of intensity of uniform changes in appearance – Part 3: Assessment of degree of rusting*.

3 Acceptance criteria

3.1 The test results based on **section 2** shall satisfy the following criteria, the poorest performing of the duplicate test panels shall

be used in the report:

Item	Acceptance criteria for epoxy-based systems	Acceptance criteria for alternative systems
Blisters on panel	No blisters	No blisters
Rust on panel	Ri 0 (0%)	Ri 0 (0%)

3.2 When evaluating test panels, blistering or rusting within 5 *mm* of the panel edge shall be ignored.

4 Test report

The test report shall include the following information:

.1 coating manufacturers' name and manufacturing site;[6]

.2 dates of test;

.3 product name/identification of each coat and, where applicable, zinc silicate shop primer;

.4 batch numbers of each component of each product;

.5 details of surface preparation of steel panels, before shop primer application, and treatment of the shop primer before over coating where relevant and at a minimum including the following:

.5.1 surface treatment, or treatment of weathered shop primer, and any other important information on treatment influencing the performance; and

.5.2 water soluble salt level measured on the steel prior to application of the shop primer;[7, 8]

.6 details of coating system, including the following:

.6.1 zinc silicate shop primer if relevant, its secondary surface pre-treatment and condition under which applied, weathering period;

.6.2 number of coats, including the shop primer, and thickness of each;

.6.3 mean dry film thickness (*DFT*) prior to testing;[9]

.6.4 thinner if used;[9]

.6.5 humidity;[9]

.6.6 air temperature;[9] and

.6.7 steel temperature;[9]

.7 details of schedule for refreshing the test gas;

.8 test results according to **section 2**; and

.9 results according to **section 3**.

[6] It should be noted that the test is valid irrespective of production site, meaning that no individual testing of product from different production sites is required.

[7] *ISO* 8502-6:*2006. Preparation of steel substrates before application of paints and related products – Tests for the assessment of surface cleanliness – Part 6: Extraction of soluble contaminants for analysis – The Bresle method.*

[8] *ISO* 8502-9:*1998. Preparation of steel substrates before application of paints and related products – Tests for the assessment of surface cleanliness – Part 9: Field method for the conductometric determination of water-soluble salts.*

[9] Both of actual specimen data and manufacturer's requirement/recommendation.

APPENDIX 2 IMMERSION TEST

1 Test condition

The immersion test[1] is developed to simulate the conditions in a crude oil tank in loaded condition.

.1 The exposure time is 180 days.

.2 The test liquid should be made as per **item 6** in the Standard.

.3 The test liquid should be added to a container with an inside flat bottom until a column of the test liquid of height of 400 *mm* is reached, resulting in an aqueous phase of 20 *mm*. Any other alternative test set-up, using an identical test liquid, which will also result in the immersion of the test panel in 20 *mm* of the aqueous phase, is also accepted. This can be achieved by using, for instance, inert marbles.

.4 The temperature of the test liquid should be 60 ± 2°C and should be uniform and maintained constant with recognised methods such as water or oil bath or air circulation oven capable of keeping the immersion liquid within the required temperature range.

.5 Test panels shall be positioned vertically and fully immersed during the test.

.6 Testing shall be carried out using duplicate panels.

.7 Inert spacers which do not cover the test area shall be used to separate test panels.

.8 The size of each test panel is 150 *mm* × 100 *mm* × 3 *mm*.

.9 The panels shall be treated according to the Performance Standard **Table 1**, **1.2** and the coating system applied according to **Table 1**, **1.4** and **1.5**.

.10 The zinc silicate shop primer, when used, shall be weathered for at least 2 months and cleaned by low pressure fresh water washing. The exact method of shop primer preparation before being over coated shall be reported, and the judgement issued for that specific system. The reverse side, and edges, of the test piece shall be coated appropriately, in order not to influence the test results.

.11 After the full immersion test period is completed the panels shall be removed from the test liquid and wiped with dry clean cloth before evaluation of the panels.

.12 Evaluation of the test panels shall be done within 24 *h* after completion of the test.

[1] Related test method is derived from, but not identical to, standard *ISO* 2812-1:*2007 - Paints and varnishes - Determination of resistance to liquids - Part 1: Immersion in liquids other than water*.

2 Test results

2.1 Prior to testing, the following measured data of each coating composing the coating system, including the zinc silicate shop primer when used under the coating system, shall be reported:

.1 infrared (*IR*) identification of the base and hardener components of the coating;

.2 specific gravity of the base and hardener components of the paint;[2] and

.3 mean dry film thickness (*DFT*) (by using a template).[3]

2.2 After testing, the following measured data shall be reported: blisters and rust.[4, 5, 6]

[2] Refer to *ISO* 2811-1/4:*1997. Paints and varnishes. Determination of density*.

[3] Six equally distributed measuring points are used on panels size 150 *mm* × 100 *mm*.

[4] *ISO* 4628-1:*2003. Paints and varnishes – Evaluation of degradation of coatings – Designation of quantity and size of defects, and of intensity of uniform changes in appearance – Part 1: General introduction and designation system*.

[5] *ISO* 4628-2:*2003. Paints and varnishes – Evaluation of degradation of coatings – Designation of quantity and size of defects, and of intensity of uniform changes in appearance – Part 2: Assessment of degree of blistering*.

[6] *ISO* 4628-3:*2003. Paints and varnishes – Evaluation of degradation of coatings – Designation of quantity and size of defects, and of intensity of uniform changes in appearance – Part 3: Assessment of degree of rusting*.

3 Acceptance criteria

3.1 The test results based on **section 2** shall satisfy the following criteria, the poorest performing of the duplicate test panels shall be used in the report:

Item	Acceptance criteria for epoxy-based systems	Acceptance criteria for alternative systems
Blisters on panel	No blisters	No blisters
Rust on panel	Ri 0 (0%)	Ri 0 (0%)

3.2 When evaluating test panels, blistering or rusting within 5 *mm* of the panel edge should be ignored.

4 Test report

The test report shall include the following information:

.1 coating manufacturers' name and manufacturing site;[7]

.2 dates of test;

.3 product name/identification of each coat and, where applicable, zinc silicate shop primer;

.4 batch numbers of each component of each product;

.5 details of surface preparation of steel panels, before shop primer application, and treatment of the shop primer before over coating where relevant and at a minimum including the following:

.5.1 surface treatment, or treatment of weathered shop primer, and any other important information on treatment influencing the performance; and

.5.2 water soluble salt level measured on the steel prior to application of the shop primer;[8, 9]

.6 details of coating system, including the following:

.6.1 zinc silicate shop primer if relevant, its secondary surface pre-treatment and condition under which applied, weathering period;

.6.2 number of coats, including the shop primer, and thickness of each;

.6.3 mean dry film thickness (*DFT*) prior to testing;[10]

.6.4 thinner if used;[10]

.6.5 humidity;[10]

.6.6 air temperature;[10] and

.6.7 steel temperature;[10]

.7 details of schedule for refreshing the test gas;

.8 test results according to **section 2**; and

.9 results according to **section 3**.

[7] It should be noted that the test is valid irrespective of production site, meaning that no individual testing of product from different production sites is required.

[8] *ISO* 8502-6:*2006. Preparation of steel substrates before application of paints and related products – Tests for the assessment of surface cleanliness – Part 6: Extraction of soluble contaminants for analysis – The Bresle method.*

[9] *ISO* 8502-9:*1998. Preparation of steel substrates before application of paints and related products – Tests for the assessment of surface cleanliness – Part 9: Field method for the conductometric determination of water-soluble salts.*

[10] Both of actual specimen data and manufacturer's requirement/recommendation.

APPENDIX 3 PRECAUTIONS REGARDING THE USE OF DANGEROUS MATERIALS

1 The test methods involve the use of materials that may be hazardous to health as follows:

.1 Sulphur Dioxide: Corrosive when wet, toxic if inhaled, causes burns, and is an irritant to the eyes and respiratory system.

.2 Hydrogen Sulphide: Highly flammable (Flash point of -82°C), can form an explosive mixture with air, corrosive when wet, causes burns, has to be kept away from sources of ignition, irritant and asphyxiant, LTEL 5 *ppm*, STEL 10 *ppm*, higher concentrations can be fatal and have no odour. Repeated exposure to low concentrations can result in the sense of smell for the gas being diminished.

.3 Benzene: Highly flammable (Flash point of -11°C), can form an explosive mixture with air, toxic, carcinogenic, acute health risk.

.4 Toluene: Highly flammable (Flash point of 4°C), can form an explosive mixture with air, irritant, acute health risk, reprotoxin.

2 Special test apparatus and precautions may be required depending on the regulations in force in the country where the tests are carried out.

3 Although some countries have no specific requirements preventing either of the tests being carried out, it shall anyhow be required that:

.1 a risk assessment of the working conditions is carried out;

.2 during the test period, the system shall be enclosed; and

.3 the environment shall be controlled, particularly at the start and end of the tests, suitable air exhaust shall be available and personal protective equipment shall be worn.

ANNEX 2 EXAMPLE OF DAILY LOG AND NON-CONFORMITY REPORT

DAILY LOG **Sheet No:**

Ship:	**Tank/Hold No:**	**Database:**
Part of structure:		
SURFACE PREPARATION		
Method:	**Area (m^2):**	
Abrasive:	**Grain size:**	
Surface temperature:	**Air temperature:**	
Relative humidity (max):	**Dew point:**	
Standard achieved:		
Rounding of edges:		
Comments:		
Job No.:	**Date:**	**Signature:**

COATING APPLICATION:

Method:

Coat No.	System	Batch No.	Date	Air temp.	Surf temp.	RH%	Dew point	DFT* Meas.	Specified

* Measured minimum and maximum DFT. DFT readings to be attached to daily log.

Comments:

Job No: **Date:** **Signature:**

NON-CONFORMITY REPORT **Sheet No:**

Ship:	**Tank/Hold No:**	**Database:**
Part of structure:		
DESCRIPTION OF THE INSPECTION FINDINGS TO BE CORRECTED		
Description of findings:		
Reference document (daily log):		
Action taken:		
Job No.:	**Date:**	**Signature:**